ABSOLUTE MAXIMUM RATINGS (Note 1)(All Voltages Relative to V_{OUT})

$V_{CONTROL}$ Pin Voltage .....40V, –0.3V
IN Pin Voltage .....40V, –0.3V
SET Pin Current (Note 7) ..... ±10mA
SET Pin Voltage (Relative to OUT) .....±0.3V
Output Short-Circuit Duration ..... Indefinite

Operating Junction Temperature Range (Notes 2, 10)
E-, I-Grade ..... –40°C to 125°C
Storage Temperature Range ..... –65°C to 150°C
Lead Temperature (Soldering, 10 sec)
MS8E, Q, T and ST Packages Only ..... 300°C

PIN CONFIGURATION

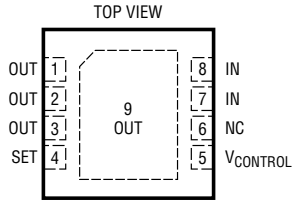

DD PACKAGE
8-LEAD (3mm × 3mm) PLASTIC DFN

T_{JMAX} = 125°C, θ_{JA} = 64°C/W, θ_{JC} = 3°C/W
EXPOSED PAD (PIN 9) IS OUT, MUST BE SOLDERED TO PCB

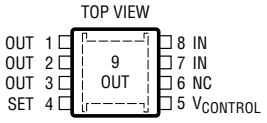

MS8E PACKAGE
8-LEAD PLASTIC MSOP

T_{JMAX} = 125°C, θ_{JA} = 60°C/W, θ_{JC} = 10°C/W
EXPOSED PAD (PIN 9) IS OUT, MUST BE SOLDERED TO PCB

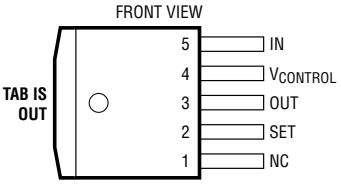

Q PACKAGE
5-LEAD PLASTIC DD-PAK

T_{JMAX} = 125°C, θ_{JA} = 30°C/W, θ_{JC} = 3°C/W

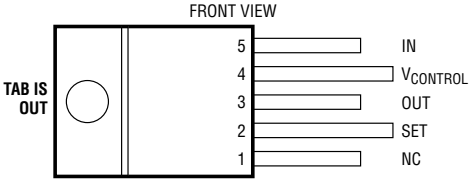

T PACKAGE
5-LEAD PLASTIC TO-220

T_{JMAX} = 125°C, θ_{JA} = 40°C/W, θ_{JC} = 3°C/W

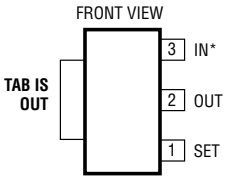

ST PACKAGE
3-LEAD PLASTIC SOT-223
*IN IS $V_{CONTROL}$ AND IN TIED TOGETHER

T_{JMAX} = 125°C, θ_{JA} = 55°C/W, θ_{JC} = 15°C/W

Downloaded from Arrow.com.

ORDER INFORMATION

LEAD BASED FINISH	TAPE AND REEL	PART MARKING*	PACKAGE DESCRIPTION	TEMPERATURE RANGE
LT3080EDD	LT3080EDD#TR	LCBN	8-Lead (3mm × 3mm) Plastic DFN	–40°C to 125°C
LT3080IDD	LT3080IDD#TR	LCBN	8-Lead (3mm × 3mm) Plastic DFN	–40°C to 125°C
LT3080EMS8E	LT3080EMS8E#TR	LTCBM	8-Lead Plastic MSOP	–40°C to 125°C
LT3080IMS8E	LT3080IMS8E#TR	LTCBM	8-Lead Plastic MSOP	–40°C to 125°C
LT3080EQ	LT3080EQ#TR	LT3080Q	5-Lead Plastic DD-Pak	–40°C to 125°C
LT3080IQ	LT3080IQ#TR	LT3080Q	5-Lead Plastic DD-Pak	–40°C to 125°C
LT3080ET	N/A	LT3080ET	5-Lead Plastic TO-220	–40°C to 125°C
LT3080IT	N/A	LT3080ET	5-Lead Plastic TO-220	–40°C to 125°C
LT3080EST	LT3080EST#TR	3080	3-Lead Plastic SOT-223	–40°C to 125°C
LT3080IST	LT3080IST#TR	3080	3-Lead Plastic SOT-223	–40°C to 125°C
LEAD FREE FINISH				
LT3080EDD#PBF	LT3080EDD#TRPBF	LCBN	8-Lead (3mm × 3mm) Plastic DFN	–40°C to 125°C
LT3080IDD#PBF	LT3080IDD#TRPBF	LCBN	8-Lead (3mm × 3mm) Plastic DFN	–40°C to 125°C
LT3080EMS8E#PBF	LT3080EMS8E#TRPBF	LTCBM	8-Lead Plastic MSOP	–40°C to 125°C
LT3080IMS8E#PBF	LT3080IMS8E#TRPBF	LTCBM	8-Lead Plastic MSOP	–40°C to 125°C
LT3080EQ#PBF	LT3080EQ#TRPBF	LT3080Q	5-Lead Plastic DD-Pak	–40°C to 125°C
LT3080IQ#PBF	LT3080IQ#TRPBF	LT3080Q	5-Lead Plastic DD-Pak	–40°C to 125°C
LT3080ET#PBF	N/A	LT3080ET	5-Lead Plastic TO-220	–40°C to 125°C
LT3080IT#PBF	N/A	LT3080ET	5-Lead Plastic TO-220	–40°C to 125°C
LT3080EST#PBF	LT3080EST#TRPBF	3080	3-Lead Plastic SOT-223	–40°C to 125°C
LT3080IST#PBF	LT3080IST#TRPBF	3080	3-Lead Plastic SOT-223	–40°C to 125°C
AUTOMOTIVE PRODUCTS**				
LT3080EST#WPBF	LT3080EST#WTRPBF	3080	3-Lead Plastic SOT-223	–40°C to 125°C
LT3080IST#WPBF	LT3080IST#WTRPBF	3080	3-Lead Plastic SOT-223	–40°C to 125°C

Contact the factory for parts specified with wider operating temperature ranges. *The temperature grade is identified by a label on the shipping container.

Tape and reel specifications. Some packages are available in 500 unit reels through designated sales channels with #TRMPBF suffix.

**Versions of this part are available with controlled manufacturing to support the quality and reliability requirements of automotive applications. These models are designated with a #W suffix. Only the automotive grade products shown are available for use in automotive applications. Contact your local Analog Devices account representative for specific product ordering information and to obtain the specific Automotive Reliability reports for these models.

Downloaded from Arrow.com.

ELECTRICAL CHARACTERISTICS

The ● denotes the specifications which apply over the full operating temperature range, otherwise specifications are at T_A = 25°C. (Note 11)

PARAMETER		CONDITIONS		MIN	TYP	MAX	UNITS
SET Pin Current	I_{SET}	V_{IN} = 1V, $V_{CONTROL}$ = 2.0V, I_{LOAD} = 1mA, T_J = 25°C V_{IN} ≥ 1V, $V_{CONTROL}$ ≥ 2.0V, 1mA ≤ I_{LOAD} ≤ 1.1A (Note 9)	 ●	9.90 9.80	10 10	10.10 10.20	µA µA
Output Offset Voltage (V_{OUT} – V_{SET}) V_{IN} = 1V, $V_{CONTROL}$ = 2V, I_{OUT} = 1mA	V_{OS}	DFN and MSOP Package	 ●	–2 –3.5		2 3.5	mV mV
		SOT-223, DD-Pak and T0-220 Package	 ●	–5 –6		5 6	mV mV
Load Regulation	ΔI_{SET} ΔV_{OS}	ΔI_{LOAD} = 1mA to 1.1A ΔI_{LOAD} = 1mA to 1.1A (Note 8)	 ●		–0.1 0.6	 1.3	nA mV
Line Regulation (Note 9) DFN and MSOP Package	ΔI_{SET} ΔV_{OS}	V_{IN} = 1V to 25V, $V_{CONTROL}$ = 2V to 25V, I_{LOAD} = 1mA V_{IN} = 1V to 25V, $V_{CONTROL}$ = 2V to 25V, I_{LOAD} = 1mA	● 		0.1 0.003	0.5 	nA/V mV/V
Line Regulation (Note 9) SOT-223, DD-Pak and T0-220 Package	ΔI_{SET} ΔV_{OS}	V_{IN} = 1V to 26V, $V_{CONTROL}$ = 2V to 26V, I_{LOAD} = 1mA V_{IN} = 1V to 26V, $V_{CONTROL}$ = 2V to 26V, I_{LOAD} = 1mA	● 		0.1 0.003	0.5 	nA/V mV/V
Minimum Load Current (Notes 3, 9)		V_{IN} = $V_{CONTROL}$ = 10V V_{IN} = $V_{CONTROL}$ = 25V (DFN and MSOP Package) V_{IN} = $V_{CONTROL}$ = 26V (SOT-223, DD-Pak and T0-220 Package)	● ● ●		300	500 1 1	µA mA mA
$V_{CONTROL}$ Dropout Voltage (Note 4)		I_{LOAD} = 100mA I_{LOAD} = 1.1A	 ●		1.2 1.35	 1.6	V V
V_{IN} Dropout Voltage (Note 4)		I_{LOAD} = 100mA I_{LOAD} = 1.1A	● ●		100 350	200 500	mV mV
$V_{CONTROL}$ Pin Current		I_{LOAD} = 100mA I_{LOAD} = 1.1A	● ●		4 17	6 30	mA mA
Current Limit		V_{IN} = 5V, $V_{CONTROL}$ = 5V, V_{SET} = 0V, V_{OUT} = –0.1V	●	1.1	1.4		A
Error Amplifier RMS Output Noise (Note 6)		I_{LOAD} = 1.1A, 10Hz ≤ f ≤ 100kHz, C_{OUT} = 10µF, C_{SET} = 0.1µF			40		μV_{RMS}
Reference Current RMS Output Noise (Note 6)		10Hz ≤ f ≤ 100kHz			1		nA_{RMS}
Ripple Rejection		f = 120Hz, V_{RIPPLE} = 0.5V_{P-P}, I_{LOAD} = 0.2A, C_{SET} = 0.1µF, C_{OUT} = 2.2µF f = 10kHz f = 1MHz			75 55 20		dB dB dB
Thermal Regulation, I_{SET}		10ms Pulse			0.003		%/W

Note 1: Stresses beyond those listed under Absolute Maximum Ratings may cause permanent damage to the device. Exposure to any Absolute Maximum Rating condition for extended periods may affect device reliability and lifetime.

Note 2: Unless otherwise specified, all voltages are with respect to V_{OUT}. The LT3080 is tested and specified under pulse load conditions such that $T_J \cong T_A$. The LT3080E is 100% tested at T_A = 25°C and performance is guaranteed from 0°C to 125°C. Performance of the LT3080E over the full –40°C to 125°C operating temperature range is assured by design, characterization, and correlation with statistical process controls. The LT3080I is guaranteed over the full –40°C to 125°C operating junction temperature range.

Note 3: Minimum load current is equivalent to the quiescent current of the part. Since all quiescent and drive current is delivered to the output of the part, the minimum load current is the minimum current required to maintain regulation.

Note 4: For the LT3080, dropout is caused by either minimum control voltage ($V_{CONTROL}$) or minimum input voltage (V_{IN}). Both parameters are specified with respect to the output voltage. The specifications represent the minimum input-to-output differential voltage required to maintain regulation.

Note 5: The $V_{CONTROL}$ pin current is the drive current required for the output transistor. This current will track output current with roughly a 1:60 ratio. The minimum value is equal to the quiescent current of the device.

Note 6: Output noise is lowered by adding a small capacitor across the voltage setting resistor. Adding this capacitor bypasses the voltage setting resistor shot noise and reference current noise; output noise is then equal to error amplifier noise (see Applications Information section).

Note 7: SET pin is clamped to the output with diodes. These diodes only carry current under transient overloads.

Note 8: Load regulation is Kelvin sensed at the package.

Note 9: Current limit may decrease to zero at input-to-output differential voltages (V_{IN}–V_{OUT}) greater than 25V (DFN and MSOP package) or 26V (SOT-223, DD-Pak and T0-220 Package). Operation at voltages for both IN and $V_{CONTROL}$ is allowed up to a maximum of 36V as long as the difference between input and output voltage is below the specified differential (V_{IN}–V_{OUT}) voltage. Line and load regulation specifications are not applicable when the device is in current limit.

Note 10: This IC includes overtemperature protection that is intended to protect the device during momentary overload conditions. Junction temperature will exceed the maximum operating junction temperature when overtemperature protection is active. Continuous operation above the specified maximum operating junction temperature may impair device reliability.

Note 11: The SOT-223 package connects the IN and $V_{CONTROL}$ pins together internally. Therefore, test conditions for this pin follow the $V_{CONTROL}$ conditions listed in the Electrical Characteristics table.

Rev. D

Downloaded from Arrow.com.

TYPICAL PERFORMANCE CHARACTERISTICS

Set Pin Current

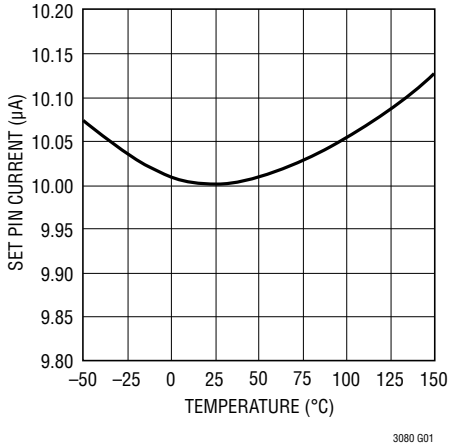

Set Pin Current Distribution

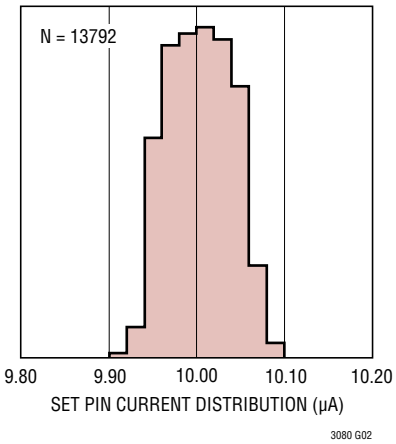

Offset Voltage ($V_{OUT} – V_{SET}$)

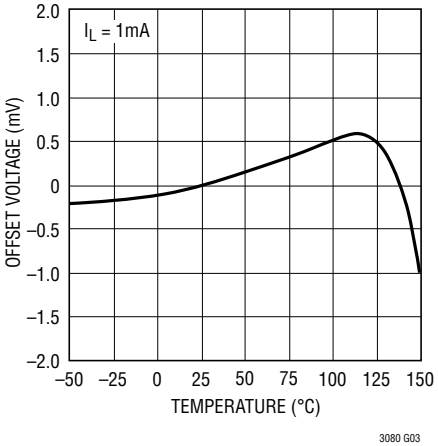

Offset Voltage Distribution

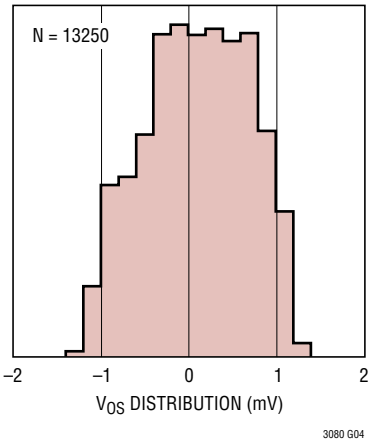

Offset Voltage

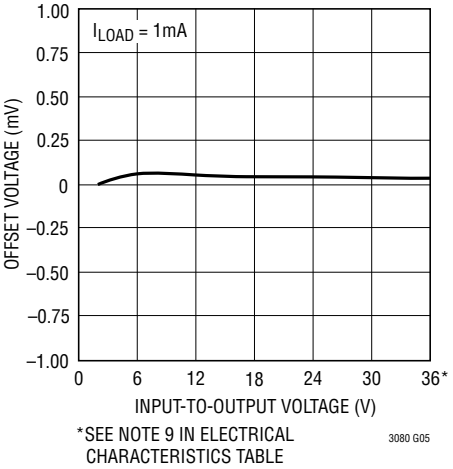

*SEE NOTE 9 IN ELECTRICAL CHARACTERISTICS TABLE

Offset Voltage

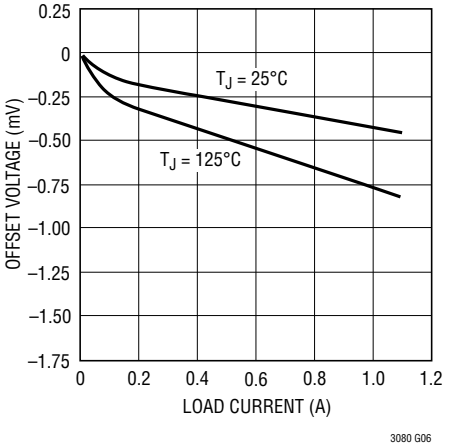

Load Regulation

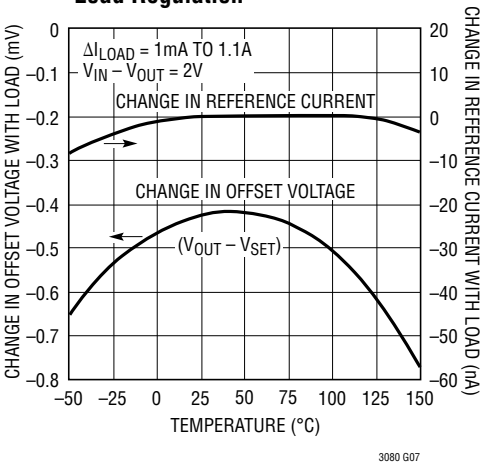

Minimum Load Current

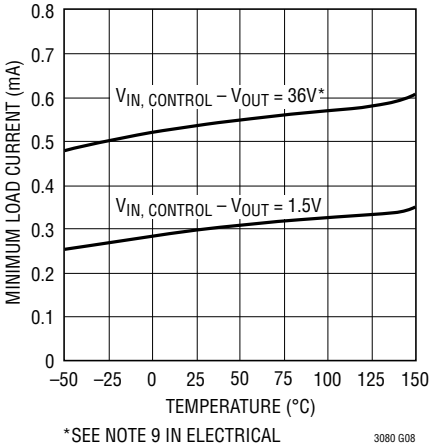

*SEE NOTE 9 IN ELECTRICAL CHARACTERISTICS TABLE

Dropout Voltage (Minimum IN Voltage)

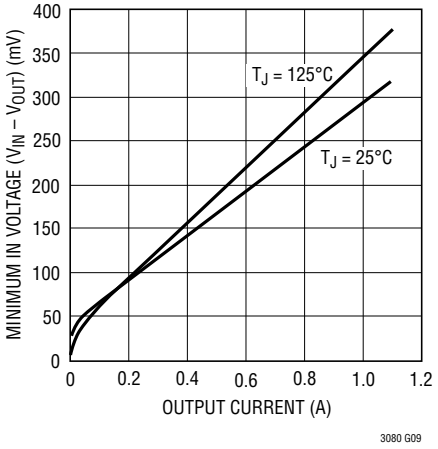

Rev. D

Downloaded from Arrow.com.

TYPICAL PERFORMANCE CHARACTERISTICS

Dropout Voltage (Minimum IN Voltage)

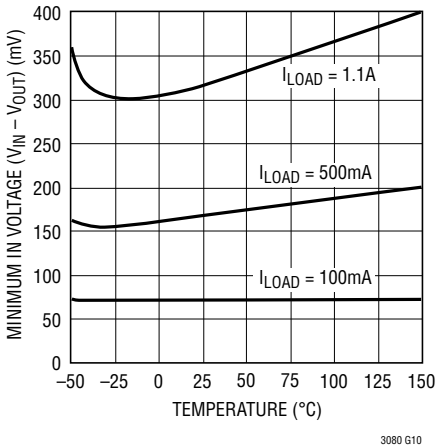

Dropout Voltage (Minimum $V_{CONTROL}$ Pin Voltage)

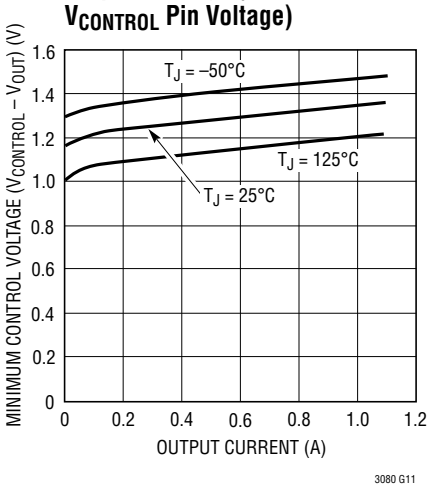

Dropout Voltage (Minimum $V_{CONTROL}$ Pin Voltage)

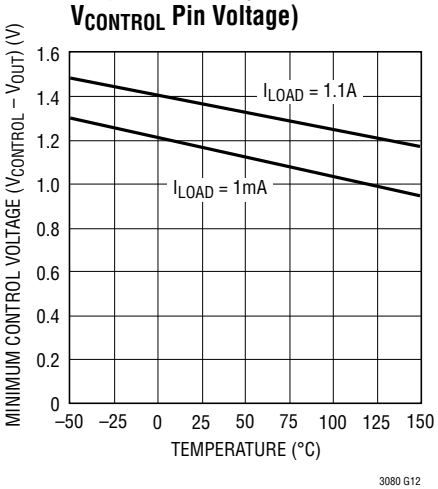

Current Limit

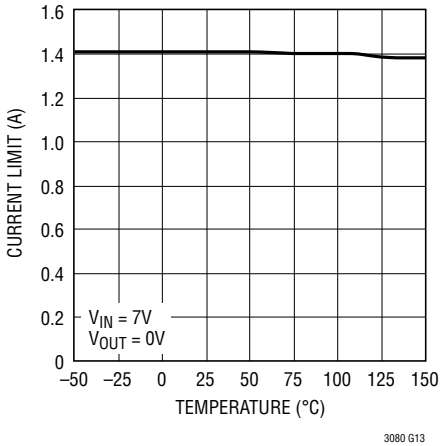

Current Limit

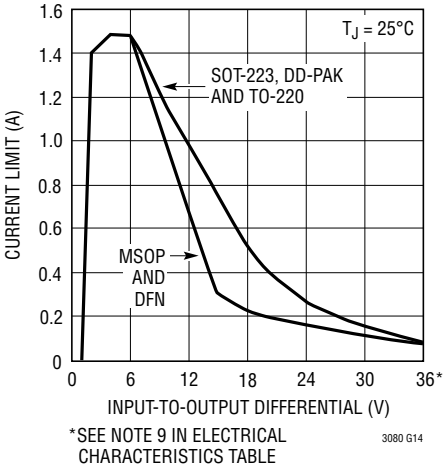

*SEE NOTE 9 IN ELECTRICAL CHARACTERISTICS TABLE

Load Transient Response

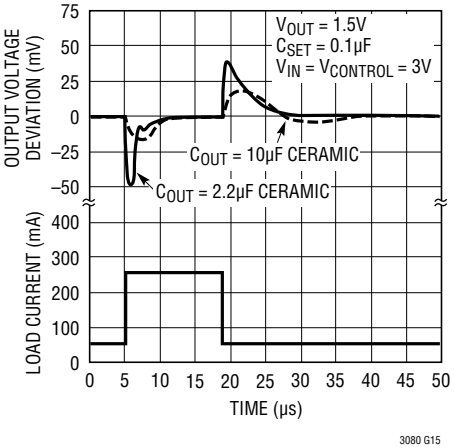

Load Transient Response

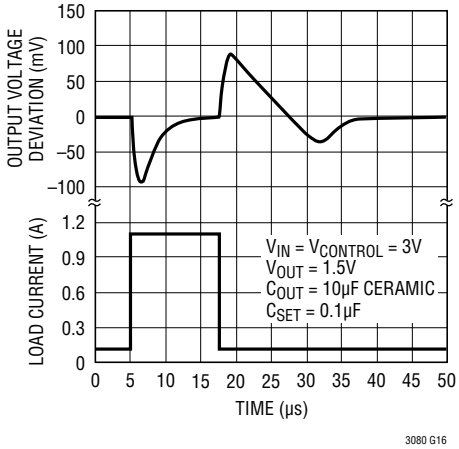

Line Transient Response

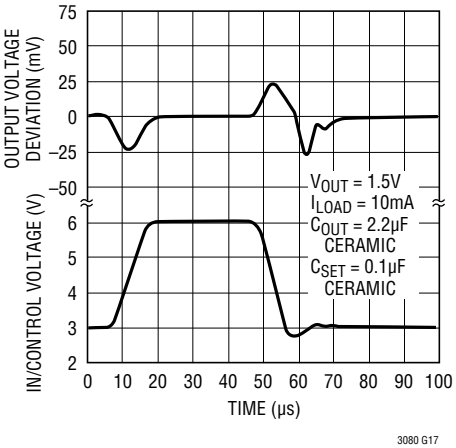

Turn-On Response

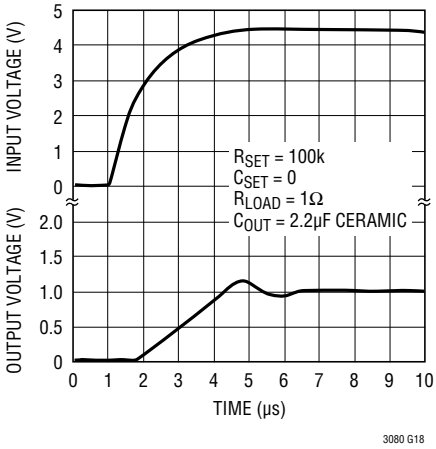

Rev. D

Downloaded from Arrow.com.

TYPICAL PERFORMANCE CHARACTERISTICS

$V_{CONTROL}$ Pin Current

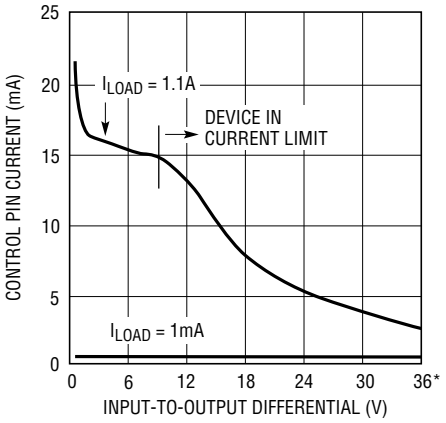

$V_{CONTROL}$ Pin Current

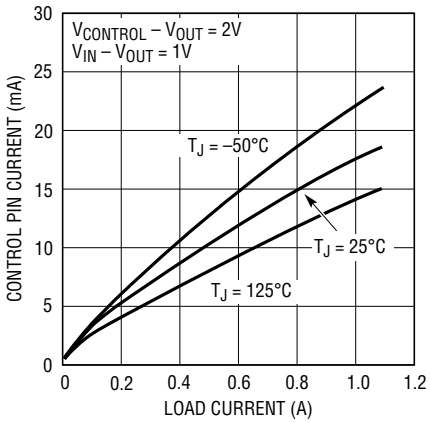

Residual Output Voltage with Less Than Minimum Load

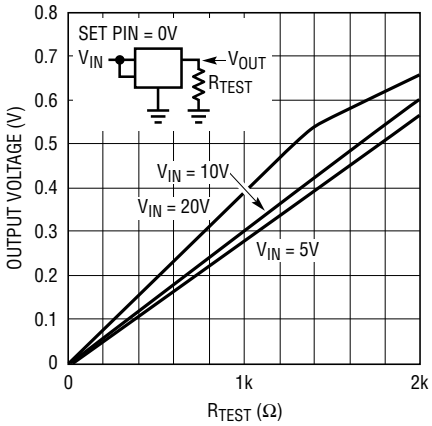

Ripple Rejection, Single Supply

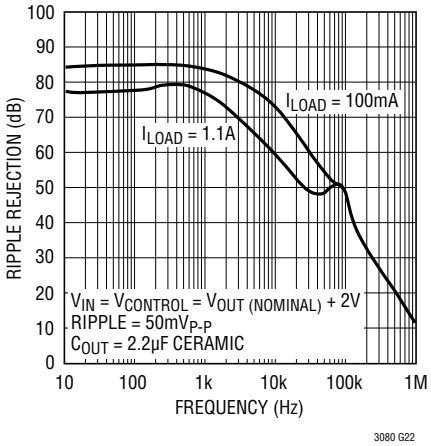

Ripple Rejection, Dual Supply, $V_{CONTROL}$ Pin

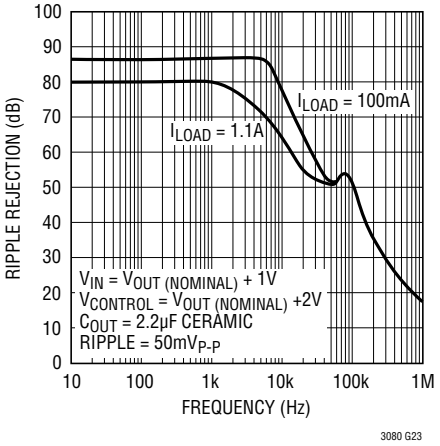

Ripple Rejection, Dual Supply, IN Pin

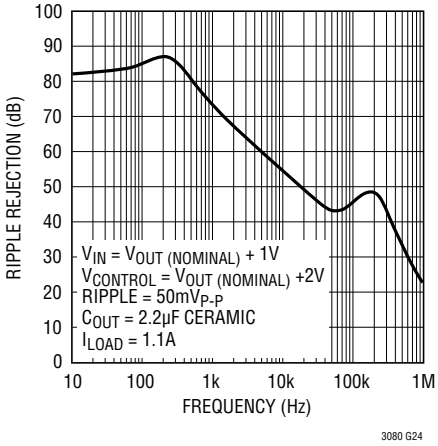

Ripple Rejection (120Hz)

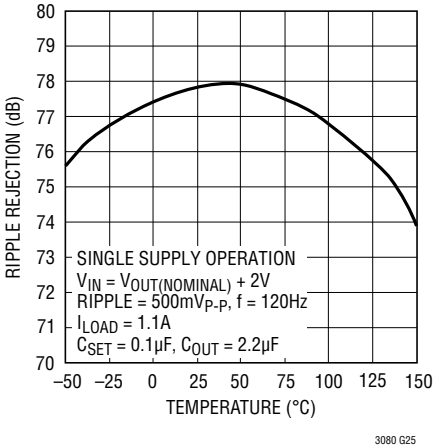

Noise Spectral Density

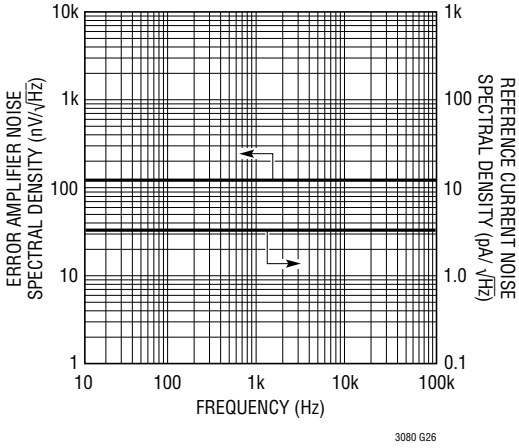

Downloaded from Arrow.com.

TYPICAL PERFORMANCE CHARACTERISTICS

Output Voltage Noise

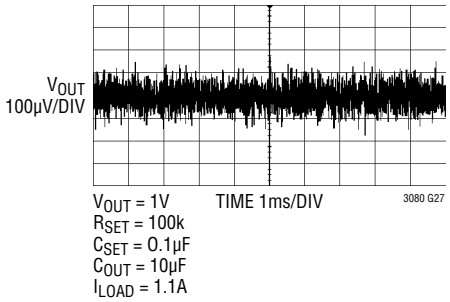

Error Amplifier Gain and Phase

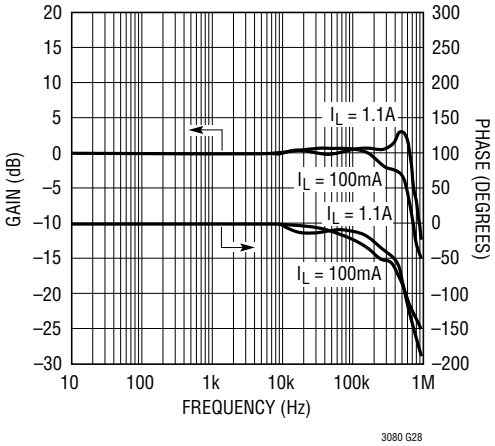

PIN FUNCTIONS (DD/MS8E/Q/T/ST)

$V_{CONTROL}$ (Pin 5/Pin 5/Pin 4/Pin 4/NA): This pin is the supply pin for the control circuitry of the device. The current flow into this pin is about 1.7% of the output current. For the device to regulate, this voltage must be more than 1.2V to 1.35V greater than the output voltage (see dropout specifications).

IN (Pins 7, 8/Pins 7, 8/Pin 5/Pin 5/Pin 3): This is the collector to the power device of the LT3080. The output load current is supplied through this pin. For the device to regulate, the voltage at this pin must be more than 0.1V to 0.5V greater than the output voltage (see dropout specifications).

NC (Pin 6/Pin 6/Pin 1/Pin 1/NA): No Connection. No connect pins have no connection to internal circuitry and may be tied to V_{IN}, $V_{CONTROL}$, V_{OUT}, GND or floated.

OUT (Pins 1-3/Pins 1-3/Pin 3/Pin 3/Pin 2): This is the power output of the device. There must be a minimum load current of 1mA or the output may not regulate.

SET (Pin 4/Pin 4/Pin 2/Pin 2/Pin 1): This pin is the input to the error amplifier and the regulation set point for the device. A fixed current of 10µA flows out of this pin through a single external resistor, which programs the output voltage of the device. Output voltage range is zero to the absolute maximum rated output voltage. Transient performance can be improved by adding a small capacitor from the SET pin to ground.

Exposed Pad (Pin 9/Pin 9/NA/NA/NA): OUT on MS8E and DFN packages.

TAB: OUT on DD-Pak, TO-220 and SOT-223 packages.

Downloaded from Arrow.com.

BLOCK DIAGRAM

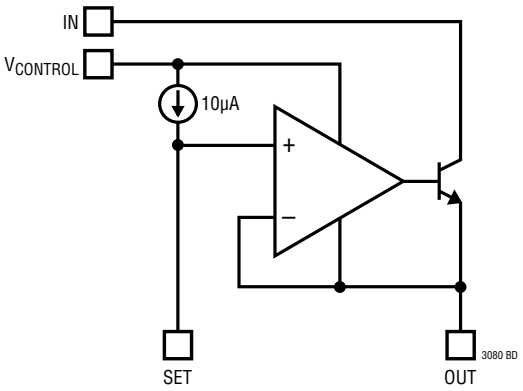

APPLICATIONS INFORMATION

The LT3080 regulator is easy to use and has all the protection features expected in high performance regulators. Included are short-circuit protection and safe operating area protection, as well as thermal shutdown.

The LT3080 is especially well suited to applications needing multiple rails. The new architecture adjusts down to zero with a single resistor handling modern low voltage digital IC's as well as allowing easy parallel operation and thermal management without heat sinks. Adjusting to "zero" output allows shutting off the powered circuitry and when the input is pre-regulated—such as a 5V or 3.3V input supply —external resistors can help spread the heat.

A precision "0" TC 10µA internal current source is connected to the noninverting input of a power operational amplifier. The power operational amplifier provides a low impedance buffered output to the voltage on the noninverting input. A single resistor from the noninverting input to ground sets the output voltage and if this resistor is set to zero, zero output results. As can be seen, any output voltage can be obtained from zero up to the maximum defined by the input power supply.

What is not so obvious from this architecture are the benefits of using a true internal current source as the reference as opposed to a bootstrapped reference in older regulators. A true current source allows the regulator to have gain and frequency response independent of the impedance on the positive input. Older adjustable regulators, such as the LT1086 have a change in loop gain with output voltage as well as bandwidth changes when the adjustment pin is bypassed to ground. For the LT3080, the loop gain is unchanged by changing the output voltage or bypassing. Output regulation is not fixed at a percentage of the output voltage but is a fixed fraction of millivolts. Use of a true current source allows all the gain in the buffer amplifier to provide regulation and none of that gain is needed to amplify up the reference to a higher output voltage.

The LT3080 has the collector of the output transistor connected to a separate pin from the control input. Since the dropout on the collector (IN pin) is only 350mV, two supplies can be used to power the LT3080 to reduce dissipation: a higher voltage supply for the control circuitry and a lower voltage supply for the collector. This increases efficiency and reduces dissipation. To further spread the heat, a resistor can be inserted in series with the collector to move some of the heat out of the IC and spread it on the PC board.

The LT3080 can be operated in two modes. Three-terminal mode has the control pin connected to the power input pin which gives a limitation of 1.35V dropout. Alternatively, the "control" pin can be tied to a higher voltage and the power IN pin to a lower voltage giving 350mV dropout on the IN pin and minimizing the power dissipation. This allows for a 1.1A supply regulating from $2.5V_{IN}$ to $1.8V_{OUT}$ or $1.8V_{IN}$ to $1.2V_{OUT}$ with low dissipation.

Downloaded from Arrow.com.

APPLICATIONS INFORMATION

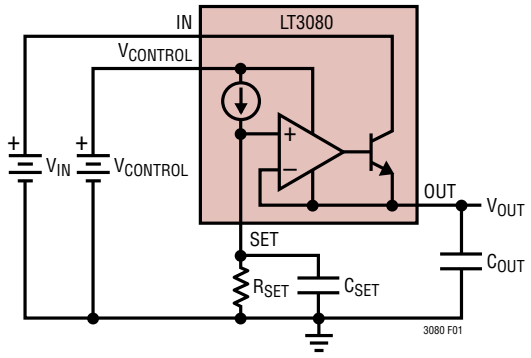

Figure 1. Basic Adjustable Regulator

Output Voltage

The LT3080 generates a 10µA reference current that flows out of the SET pin. Connecting a resistor from SET to ground generates a voltage that becomes the reference point for the error amplifier (see Figure 1). The reference voltage is a straight multiplication of the SET pin current and the value of the resistor. Any voltage can be generated and there is no minimum output voltage for the regulator. A minimum load current of 1mA is required to maintain regulation regardless of output voltage. For true zero voltage output operation, this 1mA load current must be returned to a negative supply voltage.

With the low level current used to generate the reference voltage, leakage paths to or from the SET pin can create errors in the reference and output voltages. High quality insulation should be used (e.g., Teflon, Kel-F); cleaning of all insulating surfaces to remove fluxes and other residues will probably be required. Surface coating may be necessary to provide a moisture barrier in high humidity environments.

Board leakage can be minimized by encircling the SET pin and circuitry with a guard ring operated at a potential close to itself; the guard ring should be tied to the OUT pin. Guarding both sides of the circuit board is required. Bulk leakage reduction depends on the guard ring width. Ten nanoamperes of leakage into or out of the SET pin and associated circuitry creates a 0.1% error in the reference voltage. Leakages of this magnitude, coupled with other sources of leakage, can cause significant offset voltage and reference drift, especially over the possible operating temperature range.

If guard-ring techniques are used, this bootstraps any stray capacitance at the SET pin. Since the SET pin is a high impedance node, unwanted signals may couple into the SET pin and cause erratic behavior. This will be most noticeable when operating with minimum output capacitors at full load current. The easiest way to remedy this is to bypass the SET pin with a small amount of capacitance from SET to ground, 10pF to 20pF is sufficient.

Stability and Output Capacitance

The LT3080 requires an output capacitor for stability. It is designed to be stable with most low ESR capacitors (typically ceramic, tantalum or low ESR electrolytic). A minimum output capacitor of 2.2µF with an ESR of 0.5Ω or less is recommended to prevent oscillations. Larger values of output capacitance decrease peak deviations and provide improved transient response for larger load current changes. Bypass capacitors, used to decouple individual components powered by the LT3080, increase the effective output capacitor value.

For improvement in transient performance, place a capacitor across the voltage setting resistor. Capacitors up to 1µF can be used. This bypass capacitor reduces system noise as well, but start-up time is proportional to the time constant of the voltage setting resistor (R_{SET} in Figure 1) and SET pin bypass capacitor.

Extra consideration must be given to the use of ceramic capacitors. Ceramic capacitors are manufactured with a variety of dielectrics, each with different behavior across temperature and applied voltage. The most common dielectrics used are specified with EIA temperature characteristic codes of Z5U, Y5V, X5R and X7R. The Z5U and Y5V dielectrics are good for providing high capacitances in a small package, but they tend to have strong voltage and temperature coefficients as shown in Figure 2 and Figure 3. When used with a 5V regulator, a 16V 10µF Y5V capacitor can exhibit an effective value as low as 1µF to 2µF for the DC bias voltage applied and over the operating temperature range. The X5R and X7R dielectrics result in more stable characteristics and are more suitable for use as the output capacitor. The X7R type has better stability across temperature, while the X5R is less expensive and is available in higher values. Care still must be exercised

Downloaded from Arrow.com.

APPLICATIONS INFORMATION

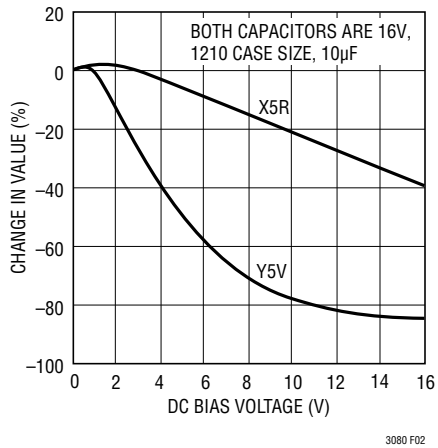

Figure 2. Ceramic Capacitor DC Bias Characteristics

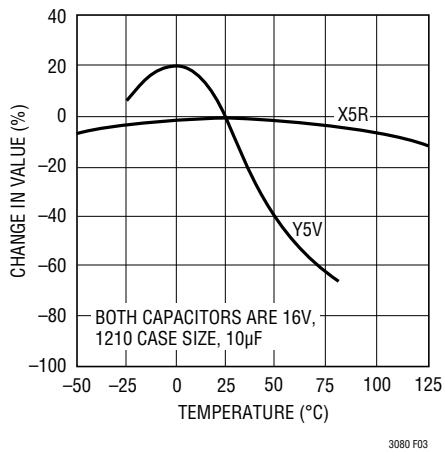

Figure 3. Ceramic Capacitor Temperature Characteristics

when using X5R and X7R capacitors; the X5R and X7R codes only specify operating temperature range and maximum capacitance change over temperature. Capacitance change due to DC bias with X5R and X7R capacitors is better than Y5V and Z5U capacitors, but can still be significant enough to drop capacitor values below appropriate levels. Capacitor DC bias characteristics tend to improve as component case size increases, but expected capacitance at operating voltage should be verified.

Voltage and temperature coefficients are not the only sources of problems. Some ceramic capacitors have a piezoelectric response. A piezoelectric device generates voltage across its terminals due to mechanical stress, similar to the way a piezoelectric microphone works. For a ceramic capacitor the stress can be induced by vibrations in the system or thermal transients.

Paralleling Devices

LT3080's may be paralleled to obtain higher output current. The SET pins are tied together and the IN pins are tied together. This is the same whether it's in three terminal mode or has separate input supplies. The outputs are connected in common using a small piece of PC trace as a ballast resistor to equalize the currents. PC trace resistance in milliohms/inch is shown in Table 1. Only a tiny area is needed for ballasting.

Table 1. PC Board Trace Resistance

WEIGHT (oz)	10 mil WIDTH	20 mil WIDTH
1	54.3	27.1
2	27.1	13.6

Trace resistance is measured in mOhms/in

The worse case offset between the set pin and the output of only ± 2 millivolts allows very small ballast resistors to be used. As shown in Figure 4, the two devices have a small 10 milliohm ballast resistor, which at full output current gives better than 80 percent equalized sharing of the current. The external resistance of 10 milliohms

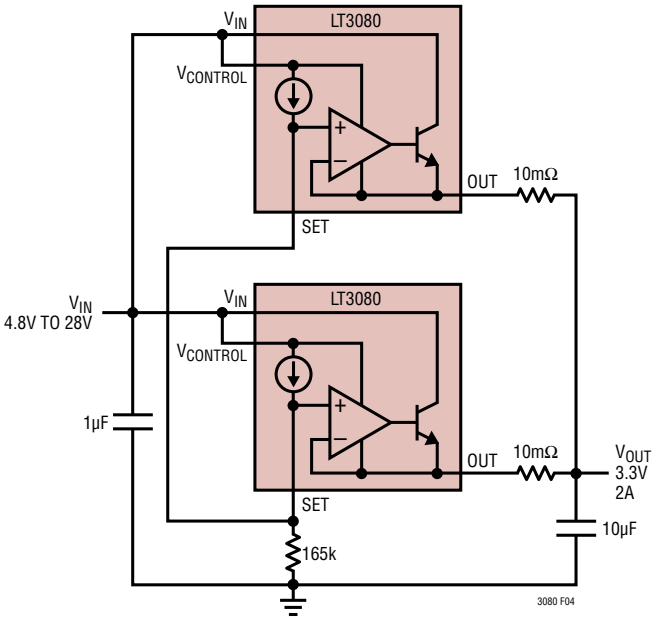

Figure 4. Parallel Devices

Downloaded from Arrow.com.

APPLICATIONS INFORMATION

(5 milliohms for the two devices in parallel) only adds about 10 millivolts of output regulation drop at an output of 2A. Even with an output voltage as low as 1V, this only adds 1% to the regulation. Of course, more than two LT3080's can be paralleled for even higher output current. They are spread out on the PC board, spreading the heat. Input resistors can further spread the heat if the input-to-output difference is high.

Thermal Performance

In this example, two LT3080 3mm × 3mm DFN devices are mounted on a 1oz copper 4-layer PC board. They are placed approximately 1.5 inches apart and the board is mounted vertically for convection cooling. Two tests were set up to measure the cooling performance and current sharing of these devices.

The first test was done with approximately 0.7V input-to-output and 1A per device. This gave a 700 milliwatt dissipation in each device and a 2A output current. The temperature rise above ambient is approximately 28°C and both devices were within plus or minus 1°C. Both the thermal and electrical sharing of these devices is excellent. The thermograph in Figure 5 shows the temperature distribution between these devices and the PC board reaches ambient temperature within about a half an inch from the devices.

The power is then increased with 1.7V across each device. This gives 1.7 watts dissipation in each device and a device temperature of about 90°C, about 65°C above ambient as shown in Figure 6. Again, the temperature matching between the devices is within 2°C, showing excellent tracking between the devices. The board temperature has reached approximately 40°C within about 0.75 inches of each device.

While 90°C is an acceptable operating temperature for these devices, this is in 25°C ambient. For higher ambients, the temperature must be controlled to prevent device temperature from exceeding 125°C. A 3-meter-per-second airflow across the devices will decrease the device temperature about 20°C providing a margin for higher operating ambient temperatures.

Both at low power and relatively high power levels devices can be paralleled for higher output current. Current sharing and thermal sharing is excellent, showing that acceptable operation can be had while keeping the peak temperatures below excessive operating temperatures on a board. This technique allows higher operating current linear regulation to be used in systems where it could never be used before.

Quieting the Noise

The LT3080 offers numerous advantages when it comes to dealing with noise. There are several sources of noise in a linear regulator. The most critical noise source for any LDO is the reference; from there, the noise contribution

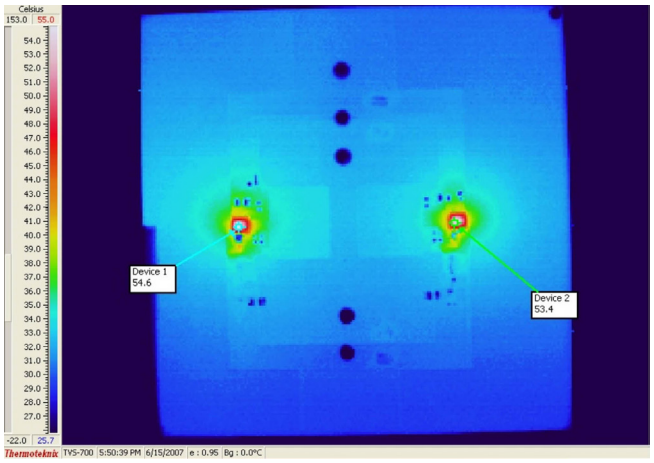

Figure 5. Temperature Rise at 700mW Dissipation

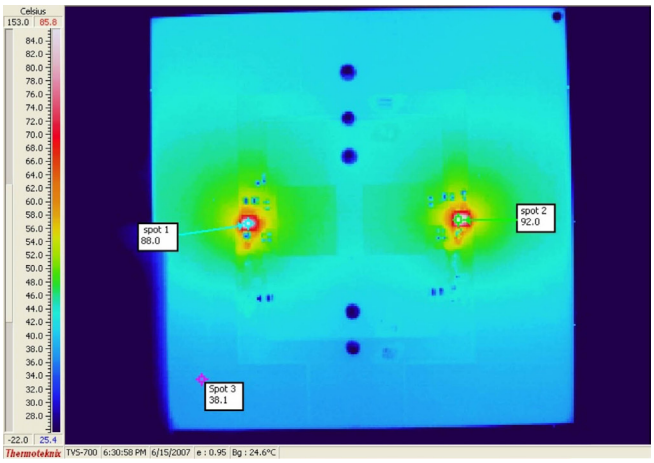

Figure 6. Temperature Rise at 1.7W Dissipation

Downloaded from Arrow.com.

APPLICATIONS INFORMATION

from the error amplifier must be considered, and the gain created by using a resistor divider cannot be forgotten.

Traditional low noise regulators bring the voltage reference out to an external pin (usually through a large value resistor) to allow for bypassing and noise reduction of reference noise. The LT3080 does not use a traditional voltage reference like other linear regulators, but instead uses a reference current. That current operates with typical noise current levels of $3.2pA/\sqrt{Hz}$ ($1nA_{RMS}$ over the 10Hz to 100kHz bandwidth). The voltage noise of this is equal to the noise current multiplied by the resistor value. The resistor generates spot noise equal to $\sqrt{4kTR}$ (k = Boltzmann's constant, $1.38 \bullet 10^{-23}$ J/°K, and T is absolute temperature) which is RMS summed with the reference current noise. To lower reference noise, the voltage setting resistor may be bypassed with a capacitor, though this causes start-up time to increase as a factor of the RC time constant.

The LT3080 uses a unity-gain follower from the SET pin to drive the output, and there is no requirement to use a resistor to set the output voltage. Use a high accuracy voltage reference placed at the SET pin to remove the errors in output voltage due to reference current tolerance and resistor tolerance. Active driving of the SET pin is acceptable; the limitations are the creativity and ingenuity of the circuit designer.

One problem that a normal linear regulator sees with reference voltage noise is that noise is gained up along with the output when using a resistor divider to operate at levels higher than the normal reference voltage. With the LT3080, the unity-gain follower presents no gain whatsoever from the SET pin to the output, so noise figures do not increase accordingly. Error amplifier noise is typically $125nV/\sqrt{Hz}$ ($40\mu V_{RMS}$ over the 10Hz to 100kHz bandwidth); this is another factor that is RMS summed in to give a final noise figure for the regulator.

Curves in the Typical Performance Characteristics show noise spectral density and peak-to-peak noise characteristics for both the reference current and error amplifier over the 10Hz to 100kHz bandwidth.

Overload Recovery

Like many IC power regulators, the LT3080 has safe operating area (SOA) protection. The SOA protection decreases current limit as the input-to-output voltage increases and keeps the power dissipation at safe levels for all values of input-to-output voltage. The LT3080 provides some output current at all values of input-to-output voltage up to the device breakdown. See the Current Limit curve in the Typical Performance Characteristics.

When power is first turned on, the input voltage rises and the output follows the input, allowing the regulator to start into very heavy loads. During start-up, as the input voltage is rising, the input-to-output voltage differential is small, allowing the regulator to supply large output currents. With a high input voltage, a problem can occur wherein removal of an output short will not allow the output voltage to recover. Other regulators, such as the LT1085 and LT1764A, also exhibit this phenomenon so it is not unique to the LT3080.

The problem occurs with a heavy output load when the input voltage is high and the output voltage is low. Common situations are immediately after the removal of a short circuit. The load line for such a load may intersect the output current curve at two points. If this happens, there are two stable operating points for the regulator. With this double intersection, the input power supply may need to be cycled down to zero and brought up again to make the output recover.

Load Regulation

Because the LT3080 is a floating device (there is no ground pin on the part, all quiescent and drive current is delivered to the load), it is not possible to provide true remote load sensing. Load regulation will be limited by the

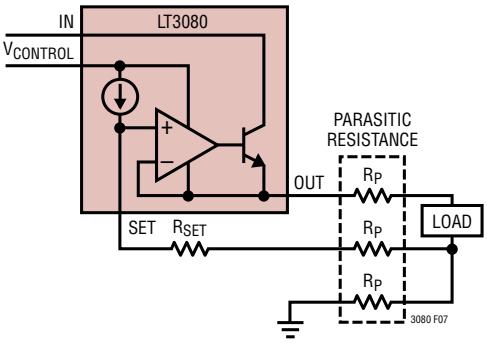

Figure 7. Connections for Best Load Regulation

Downloaded from Arrow.com.

APPLICATIONS INFORMATION

resistance of the connections between the regulator and the load. The data sheet specification for load regulation is Kelvin sensed at the pins of the package. Negative side sensing is a true Kelvin connection, with the bottom of the voltage setting resistor returned to the negative side of the load (see Figure 7). Connected as shown, system load regulation will be the sum of the LT3080 load regulation and the parasitic line resistance multiplied by the output current. It is important to keep the positive connection between the regulator and load as short as possible and use large wire or PC board traces.

Thermal Considerations

The LT3080 has internal power and thermal limiting circuitry designed to protect it under overload conditions. For continuous normal load conditions, maximum junction temperature must not be exceeded. It is important to give consideration to all sources of thermal resistance from junction to ambient. This includes junction-to-case, case-to-heat sink interface, heat sink resistance or circuit board-to-ambient as the application dictates. Additional heat sources nearby must also be considered.

For surface mount devices, heat sinking is accomplished by using the heat spreading capabilities of the PC board and its copper traces. Surface mount heat sinks and plated through-holes can also be used to spread the heat generated by power devices.

Junction-to-case thermal resistance is specified from the IC junction to the bottom of the case directly below the die. This is the lowest resistance path for heat flow. Proper mounting is required to ensure the best possible thermal flow from this area of the package to the heat sinking material. For the TO-220 package, thermal compound is strongly recommended for mechanical connections to a heat sink. A thermally conductive spacer can be used for electrical isolation as long as the added contribution to thermal resistance is considered. **Note that the Tab or Exposed Pad (depending on package) is electrically connected to the output.**

The following tables list thermal resistance for several different copper areas given a fixed board size. All measurements were taken in still air on two-sided 1/16” FR-4 board with one ounce copper.

Table 2. MSE Package, 8-Lead MSOP

COPPER AREA		BOARD AREA	THERMAL RESISTANCE (JUNCTION-TO-AMBIENT)
TOPSIDE*	BACKSIDE		
2500mm^2	2500mm^2	2500mm^2	55°C/W
1000mm^2	2500mm^2	2500mm^2	57°C/W
225mm^2	2500mm^2	2500mm^2	60°C/W
100mm^2	2500mm^2	2500mm^2	65°C/W

Table 3. DD Package, 8-Lead DFN

COPPER AREA		BOARD AREA	THERMAL RESISTANCE (JUNCTION-TO-AMBIENT)
TOPSIDE*	BACKSIDE		
2500mm^2	2500mm^2	2500mm^2	60°C/W
1000mm^2	2500mm^2	2500mm^2	62°C/W
225mm^2	2500mm^2	2500mm^2	65°C/W
100mm^2	2500mm^2	2500mm^2	68°C/W

*Device is mounted on topside

Table 4. ST Package, 3-Lead SOT-223

COPPER AREA		BOARD AREA	THERMAL RESISTANCE (JUNCTION-TO-AMBIENT)
TOPSIDE*	BACKSIDE		
2500mm^2	2500mm^2	2500mm^2	48°C/W
1000mm^2	2500mm^2	2500mm^2	48°C/W
225mm^2	2500mm^2	2500mm^2	56°C/W
100mm^2	2500mm^2	2500mm^2	62°C/W

*Device is mounted on topside

Table 5. Q Package, 5-Lead DD-Pak

COPPER AREA		BOARD AREA	THERMAL RESISTANCE (JUNCTION-TO-AMBIENT)
TOPSIDE*	BACKSIDE		
2500mm^2	2500mm^2	2500mm^2	25°C/W
1000mm^2	2500mm^2	2500mm^2	30°C/W
125mm^2	2500mm^2	2500mm^2	35°C/W

*Device is mounted on topside

T Package, 5-Lead TO-220

Thermal Resistance (Junction-to-Case) = 3°C/W

Calculating Junction Temperature

Example: Given an output voltage of 0.9V, a $V_{CONTROL}$ voltage of 3.3V ±10%, an IN voltage of 1.5V ±5%, output current range from 1mA to 1A and a maximum ambient temperature of 50°C, what will the maximum junction temperature be for the DFN package on a 2500mm^2 board with topside copper area of 500mm^2?

Downloaded from Arrow.com.

APPLICATIONS INFORMATION

The power in the drive circuit equals:

$$P_{DRIVE} = (V_{CONTROL} - V_{OUT})(I_{CONTROL})$$

where $I_{CONTROL}$ is equal to $I_{OUT}/60$. $I_{CONTROL}$ is a function of output current. A curve of $I_{CONTROL}$ vs I_{OUT} can be found in the Typical Performance Characteristics curves.

The power in the output transistor equals:

$$P_{OUTPUT} = (V_{IN} - V_{OUT})(I_{OUT})$$

The total power equals:

$$P_{TOTAL} = P_{DRIVE} + P_{OUTPUT}$$

The current delivered to the SET pin is negligible and can be ignored.

$V_{CONTROL(MAX\ CONTINUOUS)}$ = 3.630V (3.3V + 10%)

$V_{IN(MAX\ CONTINUOUS)}$ = 1.575V (1.5V + 5%)

V_{OUT} = 0.9V, I_{OUT} = 1A, T_A = 50°C

Power dissipation under these conditions is equal to:

$$PDRIVE = (V_{CONTROL} - V_{OUT})(I_{CONTROL})$$

$$I_{CONTROL} = \frac{I_{OUT}}{60} = \frac{1A}{60} = 17mA$$

$$P_{DRIVE} = (3.630V - 0.9V)(17mA) = 46mW$$

$$P_{OUTPUT} = (V_{IN} - V_{OUT})(I_{OUT})$$

$$P_{OUTPUT} = (1.575V - 0.9V)(1A) = 675mW$$

Total Power Dissipation = 721mW

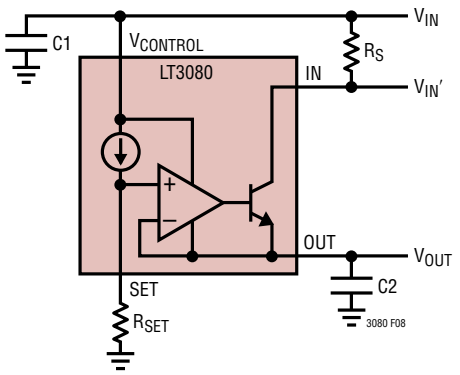

Figure 8. Reducing Power Dissipation Using a Series Resistor

Junction Temperature will be equal to:

$$T_J = T_A + P_{TOTAL} \bullet \theta_{JA} \text{ (approximated using tables)}$$

$$T_J = 50°C + 721mW \bullet 64°C/W = 96°C$$

In this case, the junction temperature is below the maximum rating, ensuring reliable operation.

Reducing Power Dissipation

In some applications it may be necessary to reduce the power dissipation in the LT3080 package without sacrificing output current capability. Two techniques are available. The first technique, illustrated in Figure 8, employs a resistor in series with the regulator's input. The voltage drop across R_S decreases the LT3080's IN-to-OUT differential voltage and correspondingly decreases the LT3080's power dissipation.

As an example, assume: $V_{IN} = V_{CONTROL}$ = 5V, V_{OUT} = 3.3V and $I_{OUT(MAX)}$ = 1A. Use the formulas from the Calculating Junction Temperature section previously discussed.

Without series resistor R_S, power dissipation in the LT3080 equals:

$$P_{TOTAL} = (5V - 3.3V) \bullet \left(\frac{1A}{60}\right) + (5V - 3.3V) \bullet 1A$$
$$= 1.73W$$

If the voltage differential (V_{DIFF}) across the NPN pass transistor is chosen as 0.5V, then R_S equals:

$$R_S = \frac{5V - 3.3V - 0.5V}{1A} = 1.2\Omega$$

Power dissipation in the LT3080 now equals:

$$P_{TOTAL} = (5V - 3.3V) \bullet \left(\frac{1A}{60}\right) + (0.5V) \bullet 1A = 0.53W$$

The LT3080's power dissipation is now only 30% compared to no series resistor. R_S dissipates 1.2W of power. Choose appropriate wattage resistors to handle and dissipate the power properly.

Downloaded from Arrow.com.

APPLICATIONS INFORMATION

The second technique for reducing power dissipation, shown in Figure 9, uses a resistor in parallel with the LT3080. This resistor provides a parallel path for current flow, reducing the current flowing through the LT3080. This technique works well if input voltage is reasonably constant and output load current changes are small. This technique also increases the maximum available output current at the expense of minimum load requirements.

As an example, assume: $V_{IN} = V_{CONTROL} = 5V$, $V_{IN(MAX)} = 5.5V$, $V_{OUT} = 3.3V$, $V_{OUT(MIN)} = 3.2V$, $I_{OUT(MAX)} = 1A$ and $I_{OUT(MIN)} = 0.7A$. Also, assuming that R_P carries no more than 90% of $I_{OUT(MIN)} = 630mA$.

Calculating R_P yields:

$$R_P = \frac{5.5V - 3.2V}{0.63A} = 3.65\Omega$$

(5% Standard value = 3.6Ω)

The maximum total power dissipation is (5.5V – 3.2V) • 1A = 2.3W. However the LT3080 supplies only:

$$1A - \frac{5.5V - 3.2V}{3.6\Omega} = 0.36A$$

Therefore, the LT3080's power dissipation is only:

$$P_{DIS} = (5.5V - 3.2V) \bullet 0.36A = 0.83W$$

R_P dissipates 1.47W of power. As with the first technique, choose appropriate wattage resistors to handle and dissipate the power properly. With this configuration, the LT3080 supplies only 0.36A. Therefore, load current can increase by 0.64A to 1.64A while keeping the LT3080 in its normal operating range.

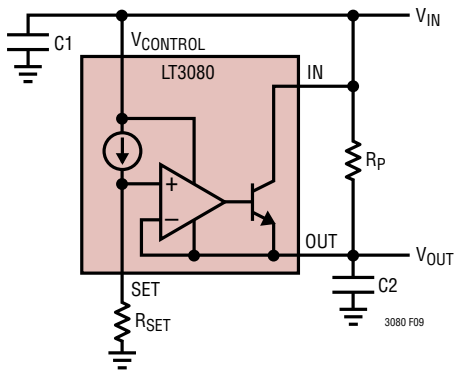

Figure 9. Reducing Power Dissipation Using a Parallel Resistor

Downloaded from Arrow.com.

TYPICAL APPLICATIONS

Higher Output Current

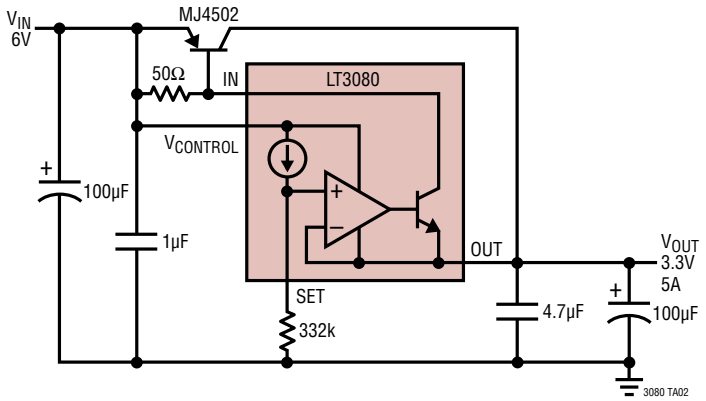

Adding Shutdown

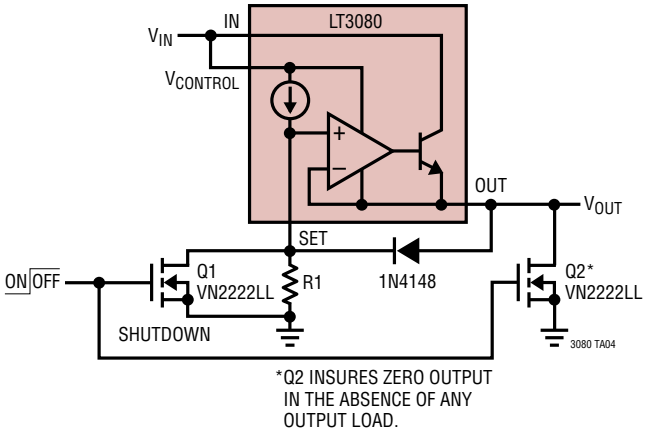

Current Source

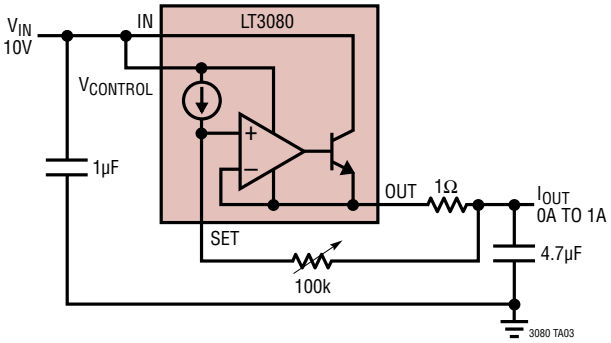

Low Dropout Voltage LED Driver

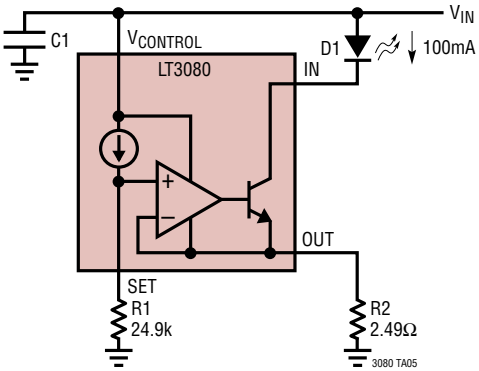

Using a Lower Value SET Resistor

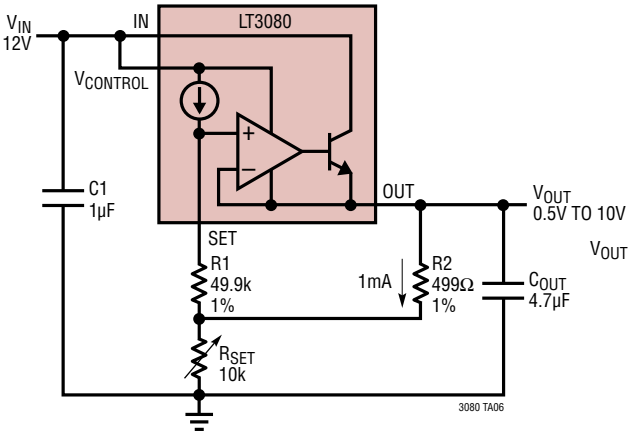

$V_{OUT} = 0.5V + (1mA + 10\mu A) \bullet R_{SET}$

Rev. D

Downloaded from Arrow.com.

TYPICAL APPLICATIONS

Coincident Tracking

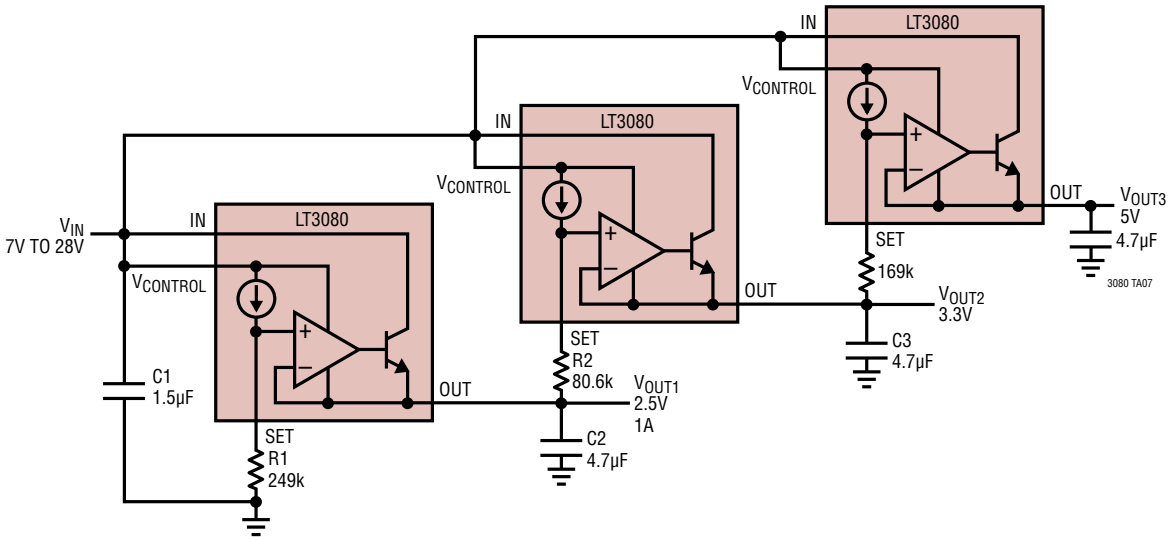

Adding Soft-Start

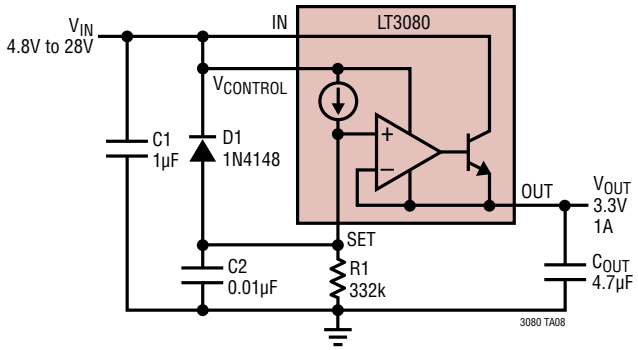

Lab Supply

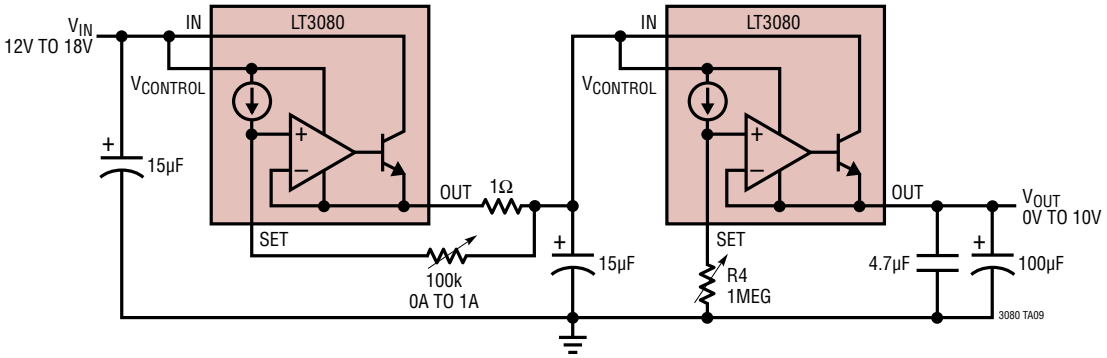

Rev. D

Downloaded from Arrow.com.

TYPICAL APPLICATIONS

High Voltage Regulator

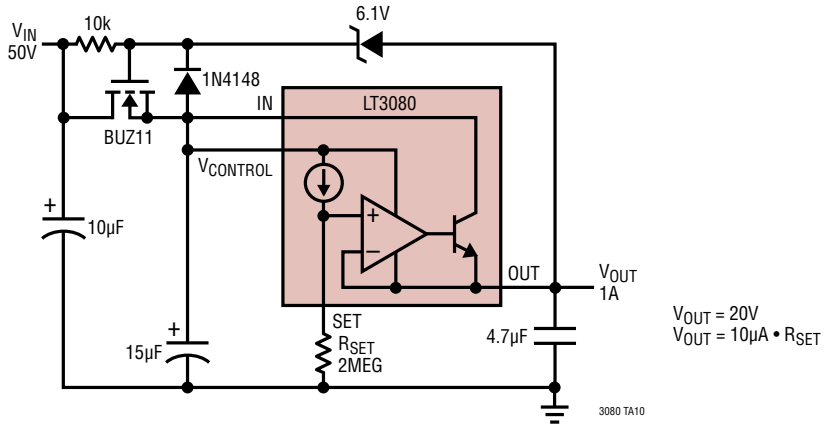

$V_{OUT} = 20V$
$V_{OUT} = 10\mu A \bullet R_{SET}$

Ramp Generator

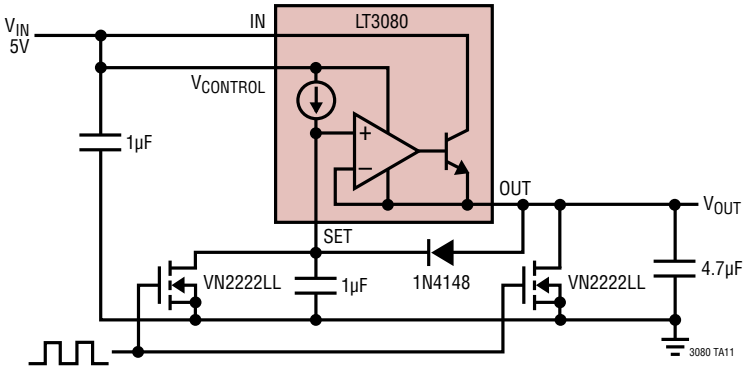

Reference Buffer

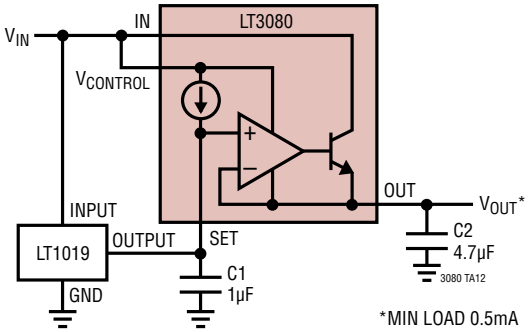

*MIN LOAD 0.5mA

Ground Clamp

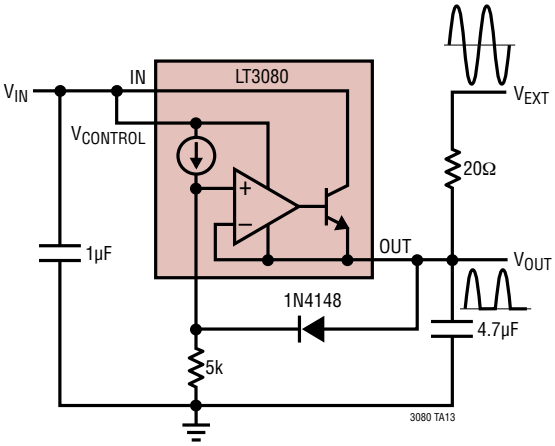

Boosting Fixed Output Regulators

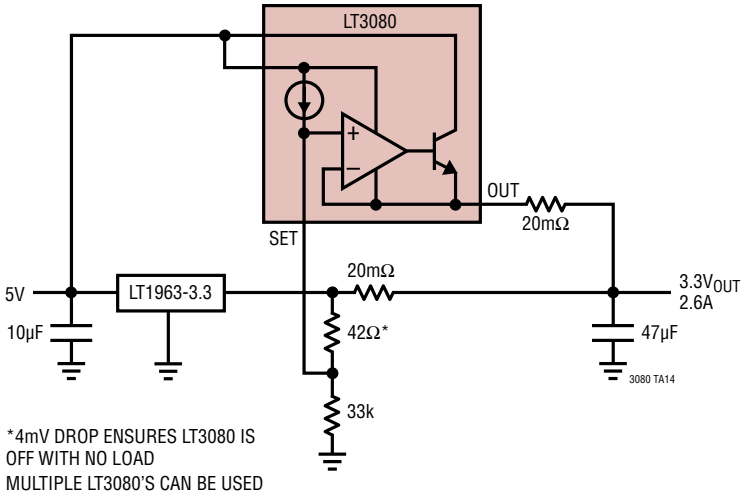

*4mV DROP ENSURES LT3080 IS OFF WITH NO LOAD
MULTIPLE LT3080'S CAN BE USED

Downloaded from Arrow.com.

TYPICAL APPLICATIONS

Low Voltage, High Current Adjustable High Efficiency Regulator*

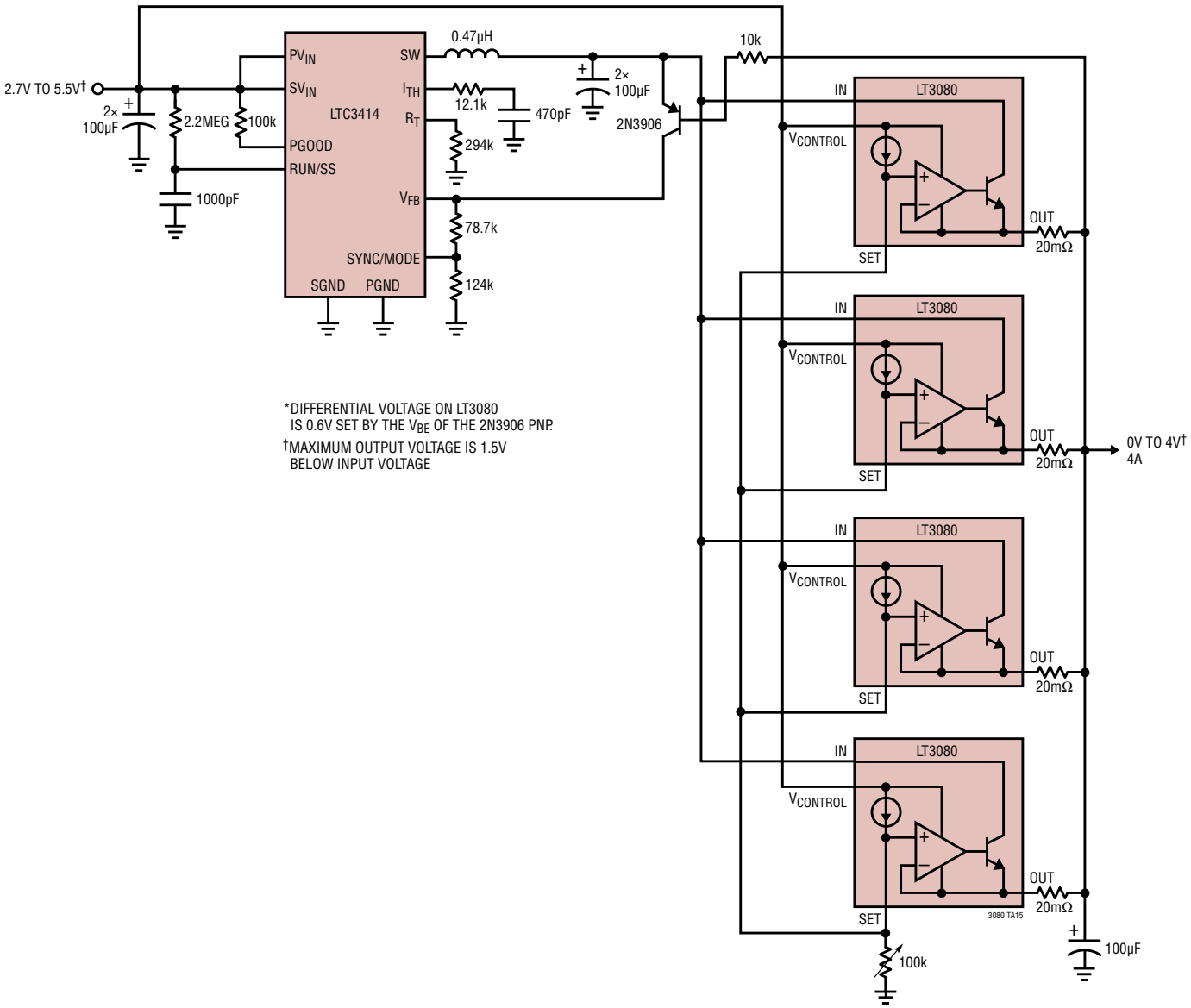

Downloaded from Arrow.com.

TYPICAL APPLICATIONS

Adjustable High Efficiency Regulator*

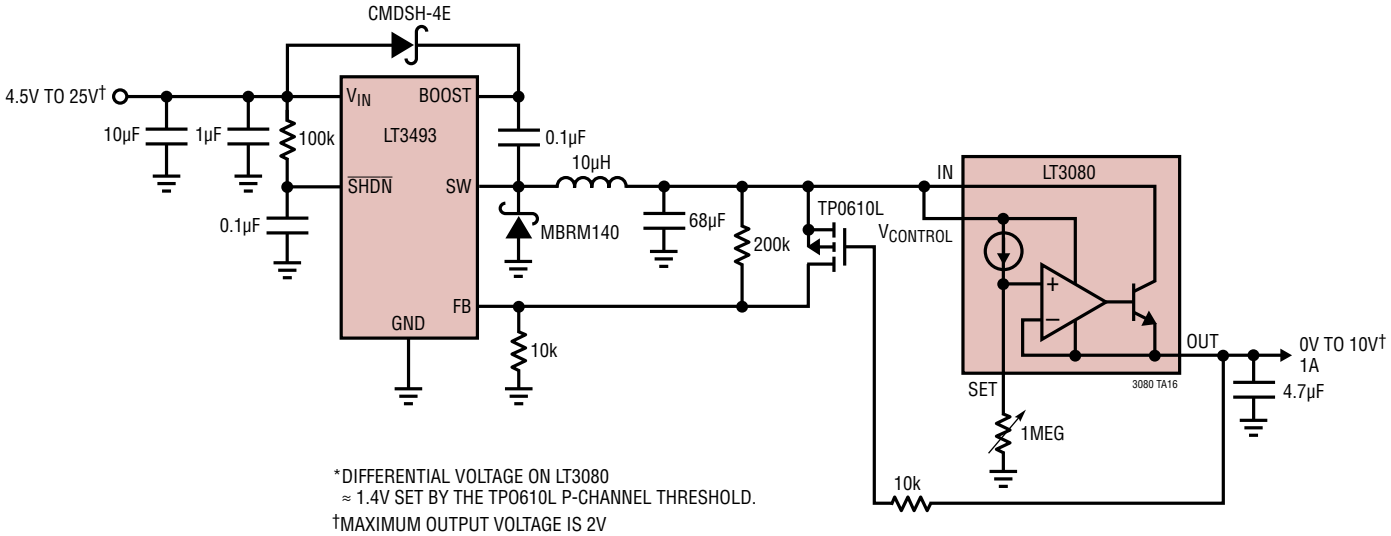

*DIFFERENTIAL VOLTAGE ON LT3080
≈ 1.4V SET BY THE TP0610L P-CHANNEL THRESHOLD.

†MAXIMUM OUTPUT VOLTAGE IS 2V
BELOW INPUT VOLTAGE

2 Terminal Current Source

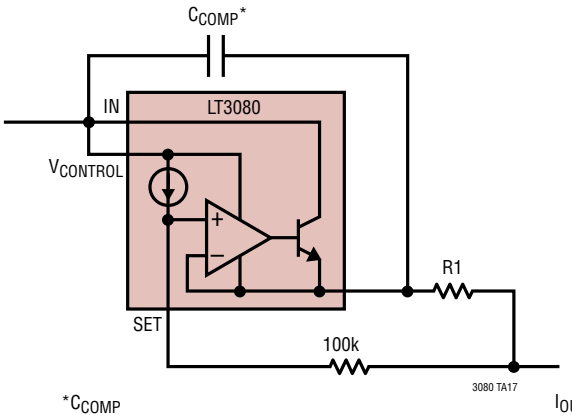

*CCOMP
R1 ≤ 10Ω 10µF
R1 ≥ 10Ω 2.2µF

$I_{OUT} = \frac{1V}{R1}$

Downloaded from Arrow.com.

PACKAGE DESCRIPTION

DD Package
8-Lead Plastic DFN (3mm × 3mm)
(Reference LTC DWG # 05-08-1698 Rev C)

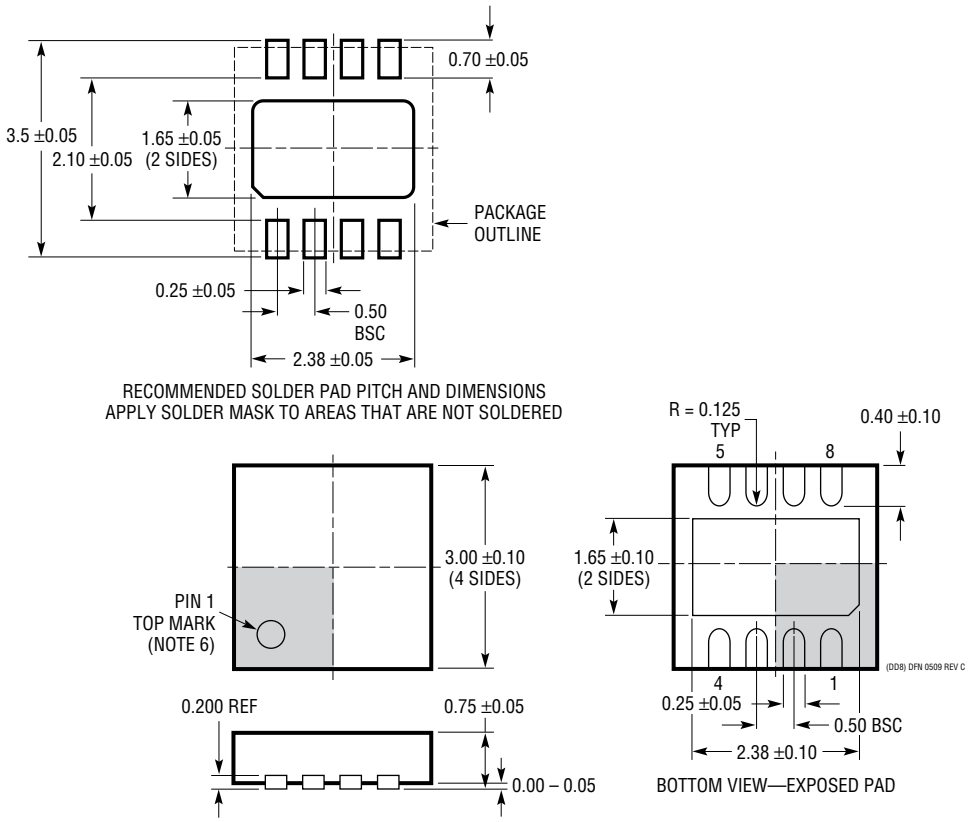

NOTE:
1. DRAWING TO BE MADE A JEDEC PACKAGE OUTLINE M0-229 VARIATION OF (WEED-1)
2. DRAWING NOT TO SCALE
3. ALL DIMENSIONS ARE IN MILLIMETERS
4. DIMENSIONS OF EXPOSED PAD ON BOTTOM OF PACKAGE DO NOT INCLUDE MOLD FLASH. MOLD FLASH, IF PRESENT, SHALL NOT EXCEED 0.15mm ON ANY SIDE
5. EXPOSED PAD SHALL BE SOLDER PLATED
6. SHADED AREA IS ONLY A REFERENCE FOR PIN 1 LOCATION ON TOP AND BOTTOM OF PACKAGE

Downloaded from Arrow.com.

PACKAGE DESCRIPTION

MS8E Package
8-Lead Plastic MSOP, Exposed Die Pad
(Reference LTC DWG # 05-08-1662 Rev K)

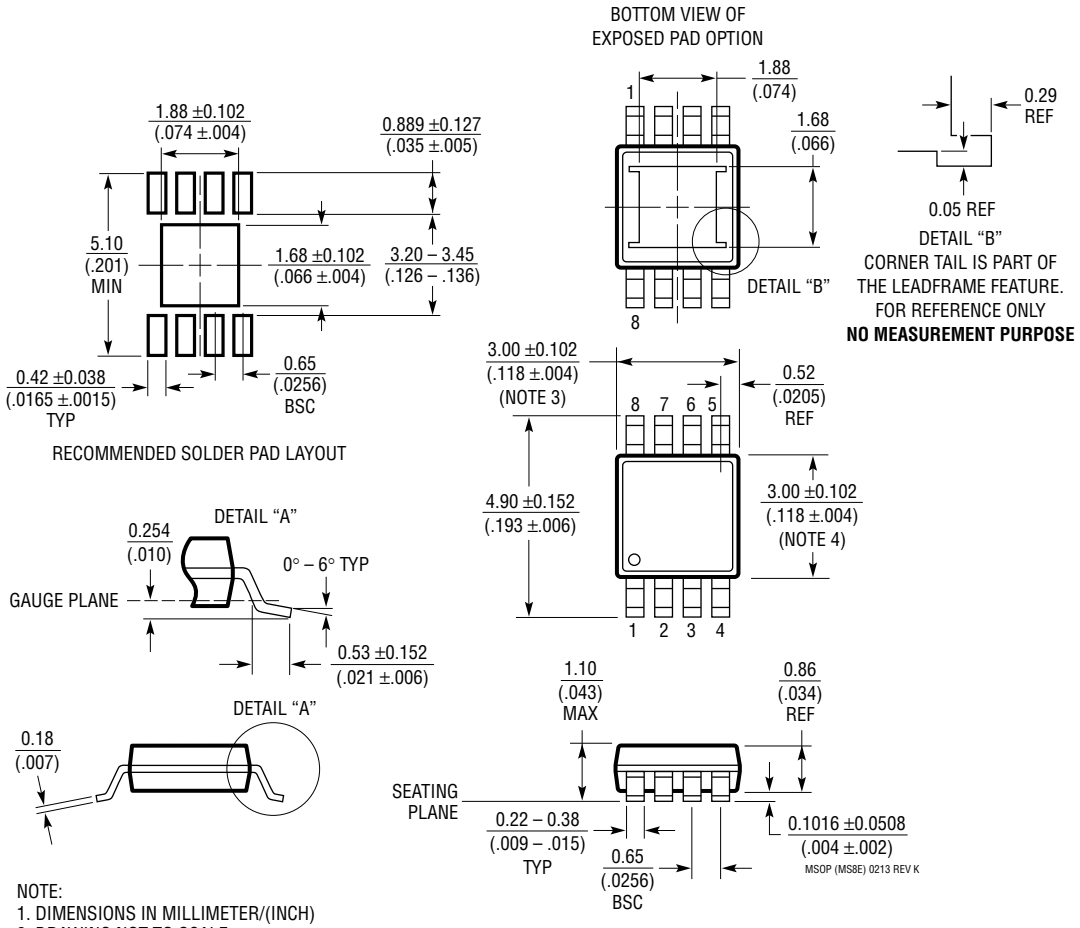

NOTE:
1. DIMENSIONS IN MILLIMETER/(INCH)
2. DRAWING NOT TO SCALE
3. DIMENSION DOES NOT INCLUDE MOLD FLASH, PROTRUSIONS OR GATE BURRS.
   MOLD FLASH, PROTRUSIONS OR GATE BURRS SHALL NOT EXCEED 0.152mm (.006") PER SIDE
4. DIMENSION DOES NOT INCLUDE INTERLEAD FLASH OR PROTRUSIONS.
   INTERLEAD FLASH OR PROTRUSIONS SHALL NOT EXCEED 0.152mm (.006") PER SIDE
5. LEAD COPLANARITY (BOTTOM OF LEADS AFTER FORMING) SHALL BE 0.102mm (.004") MAX
6. EXPOSED PAD DIMENSION DOES INCLUDE MOLD FLASH. MOLD FLASH ON E-PAD
   SHALL NOT EXCEED 0.254mm (.010") PER SIDE.

Downloaded from Arrow.com.

PACKAGE DESCRIPTION

Q Package
5-Lead Plastic DD Pak
(Reference LTC DWG # 05-08-1461 Rev F)

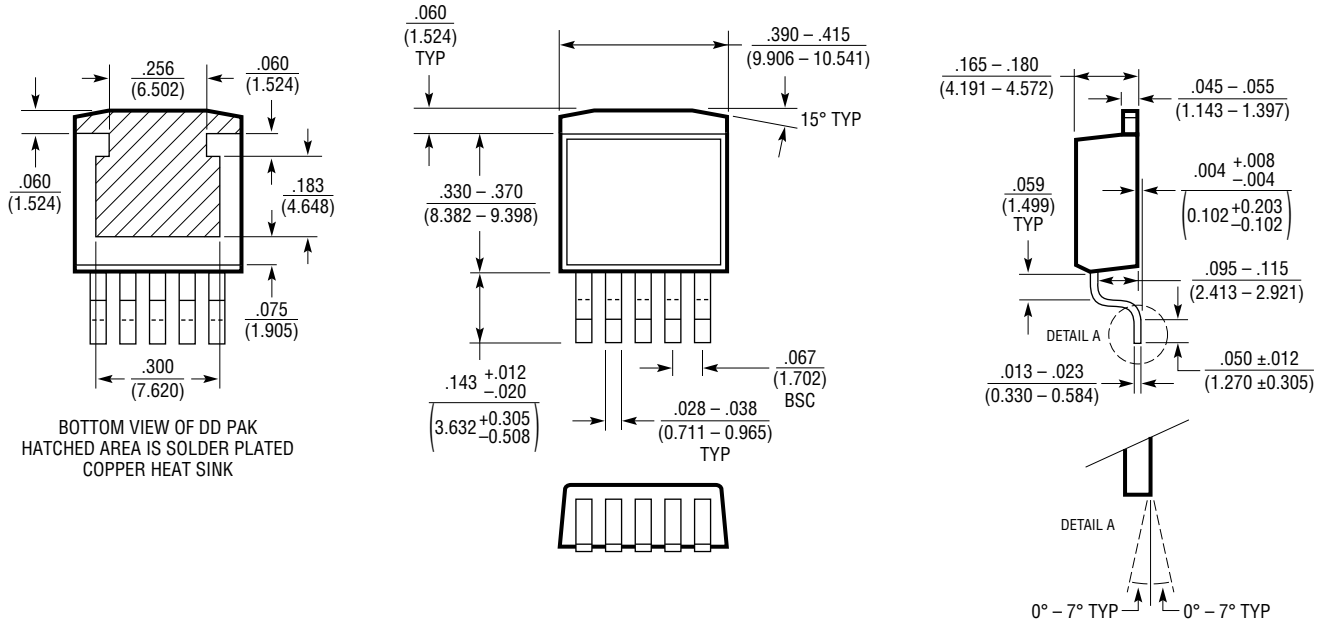

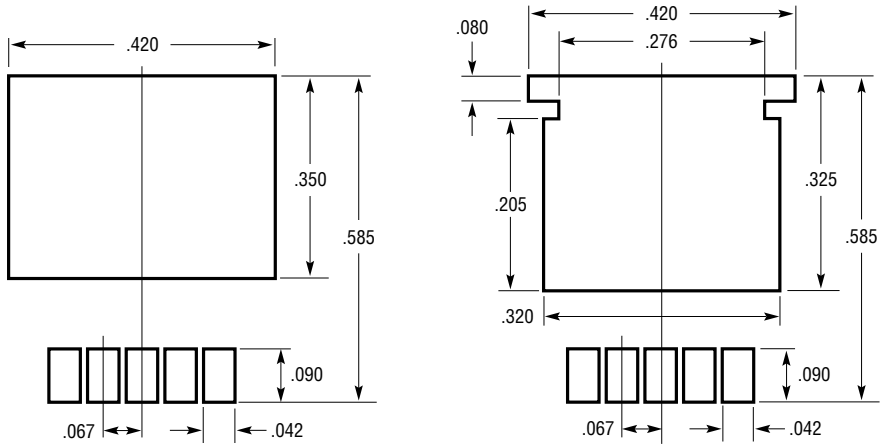

RECOMMENDED SOLDER PAD LAYOUT

RECOMMENDED SOLDER PAD LAYOUT
FOR THICKER SOLDER PASTE APPLICATIONS

NOTE:
1. DIMENSIONS IN INCH/(MILLIMETER)
2. DRAWING NOT TO SCALE

Q(DD5) 0811 REV F

Rev. D

Downloaded from Arrow.com.

PACKAGE DESCRIPTION

T-Package
5-Lead Plastic TO-220 (Standard)
(Reference LTC DWG # 05-08-1421)

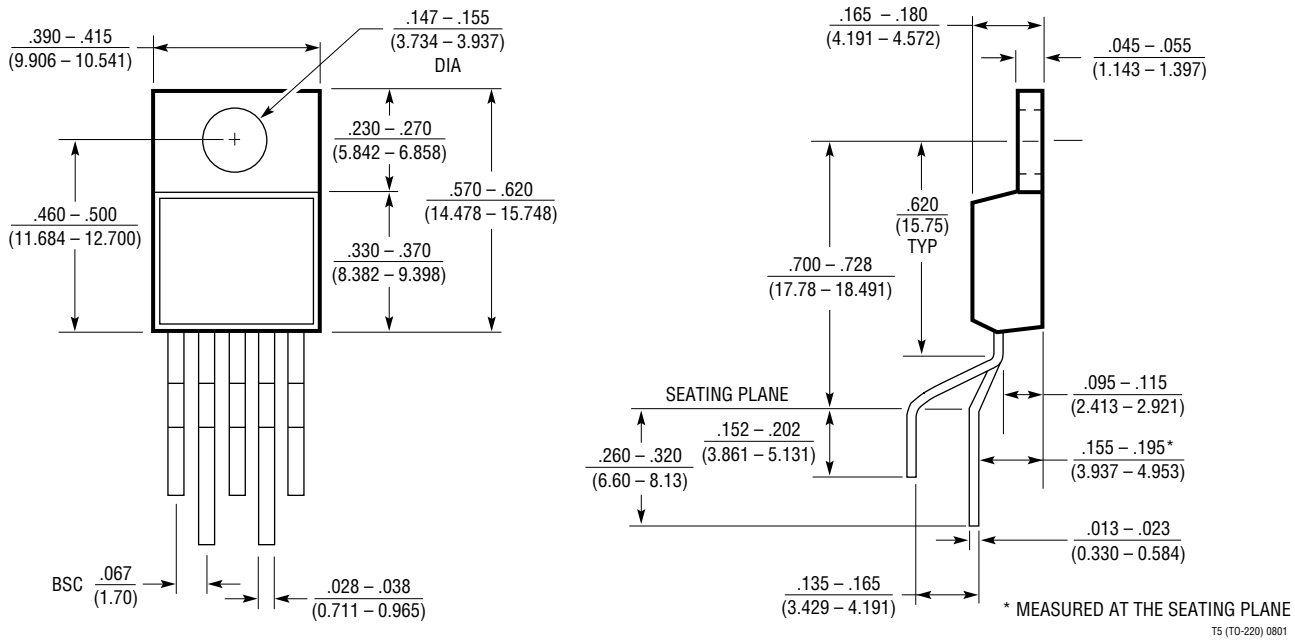

Downloaded from Arrow.com.

PACKAGE DESCRIPTION

ST Package
3-Lead Plastic SOT-223
(Reference LTC DWG # 05-08-1630)

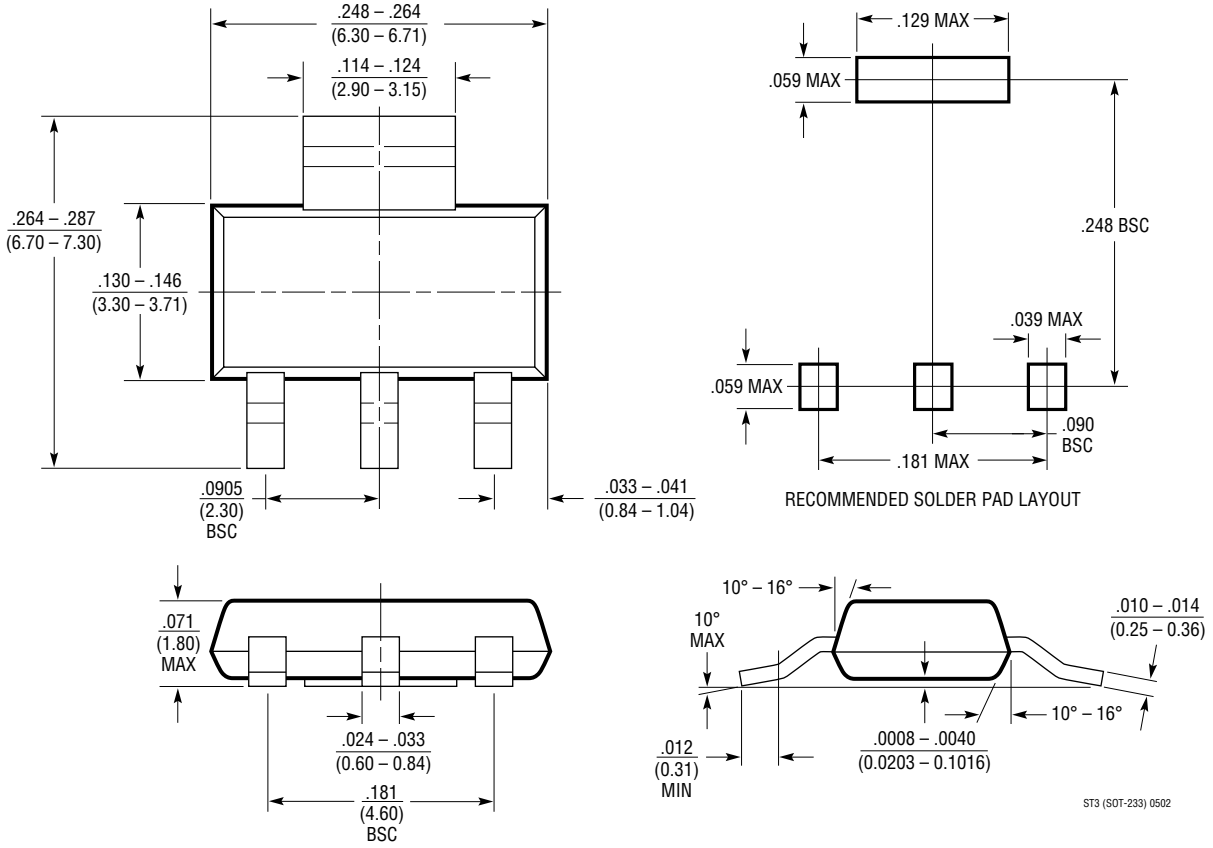

Rev. D

Downloaded from Arrow.com.

REVISION HISTORY (Revision history begins at Rev B)

REV	DATE	DESCRIPTION	PAGE NUMBER
B	6/10	Made minor updates to Features and Description sections	1
		Revised Line Regulation Conditions and Note 2	3
		Made minor text edits in Applications Information section	9
		Added 200k resistor to drawing 3080 TA19 in Typical Application section	20
		Updated Package Description drawings	21, 22
C	9/11	Added I-grade information to the Absolute Maximum Ratings section and the Order Information table.	2
		Updated Note 2.	3
D	7/20	Added AEC-Q100 Qualified for automotive applications	1
		Added #W options for 3-lead plastic SOT-223	3
		Removed the tape and reel options for 5-lead plastic TO-220	3
		Updated Note 2 to guaranty for E-grade	4
		Updated the V_{OUT} formula in the Using a Lower Value SET Resistor typical application circuit	17

Information furnished by Analog Devices is believed to be accurate and reliable. However, no responsibility is assumed by Analog Devices for its use, nor for any infringements of patents or other rights of third parties that may result from its use. Specifications subject to change without notice. No license is granted by implication or otherwise under any patent or patent rights of Analog Devices.

Downloaded from Arrow.com.

TYPICAL APPLICATION

Paralleling Regulators

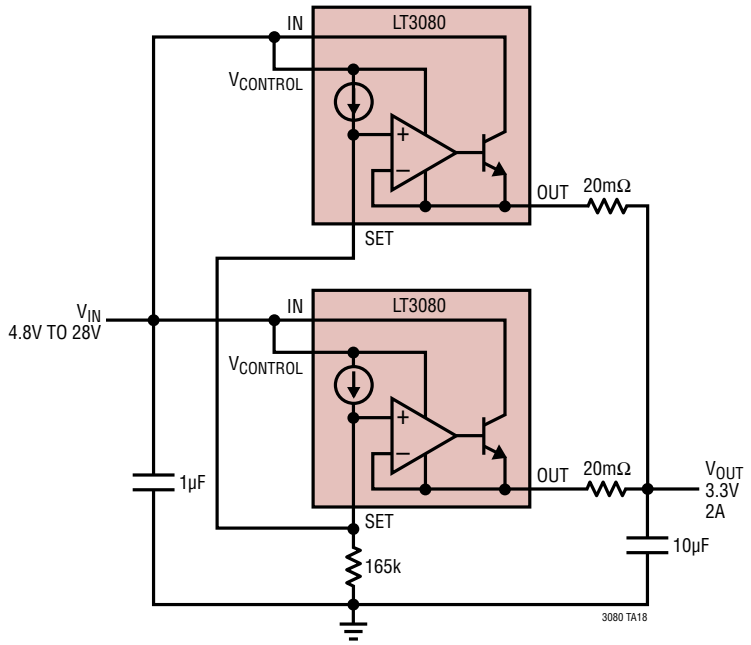

RELATED PARTS

PART NUMBER	DESCRIPTION	COMMENTS
LDOs		
LT1086	1.5A Low Dropout Regulator	Fixed 2.85V, 3.3V, 3.6V, 5V and 12V Output
LT1117	800mA Low Dropout Regulator	1V Dropout, Adjustable or Fixed Output, DD-Pak, SOT-223 Packages
LT1118	800mA Low Dropout Regulator	OK for Sinking and Sourcing, S0-8 and SOT-223 Packages
LT1963A	1.5A Low Noise, Fast Transient Response LDO	340mV Dropout Voltage, Low Noise: 40µV_{RMS}, V_{IN} = 2.5V to 20V, TO-220, DD-Pak, SOT-223 and SO-8 Packages
LT1965	1.1A Low Noise LDO	290mV Dropout Voltage, Low Noise 40µV_{RMS}, V_{IN} = 1.8V to 20V, V_{OUT} = 1.2V to 19.5V, Stable with Ceramic Caps TO-220, DD-Pak, MSOP and 3mm × 3mm DFN packages.
LTC®3026	1.5A Low Input Voltage VLDO™ Regulator	V_{IN}: 1.14V to 3.5V (Boost Enabled), 1.14V to 5.5V (with External 5V), V_{DO} = 0.1V, I_Q = 950µA, Stable with 10µF Ceramic Capacitors, 10-Lead MSOP and DFN Packages
Switching Regulators		
LT1976	High Voltage, 1.5A Step-Down Switching Regulator	f = 200kHz, I_Q = 100µA, TSSOP-16E Package
LTC3414	4A (I_{OUT}), 4MHz Synchronous Step-Down DC/DC Converter	95% Efficiency, V_{IN}: 2.25V to 5.5V, $V_{OUT(MIN)}$ = 0.8V, TSSOP Package
LTC3406/LTC3406B	600mA (I_{OUT}), 1.5MHz Synchronous Step-Down DC/DC Converter	95% Efficiency, V_{IN}: 2.5V to 5.5V, $V_{OUT(MIN)}$ = 0.6V, I_Q = 20µA, I_{SD} < 1µA, ThinSOT™ Package
LTC3411	1.25A (I_{OUT}), 4MHz Synchronous Step-Down DC/DC Converter	95% Efficiency, V_{IN}: 2.5V to 5.5V, $V_{OUT(MIN)}$ = 0.8V, I_Q = 60µA, I_{SD} < 1µA, 10-Lead MS or DFN Packages

© ANALOG DEVICES, INC. 2007-2020
Downloaded from Arrow.com.