PART NUMBER	SML-LXL1209SOC-TR	REV.	D

DATE	E.C.N. NUMBER AND REVISION COMMENTS	REV.
03.14.03	E.C.N. #10BRDR. & #10967.	A
12.03.04	E.C.N. #11148.	B
05.27.10	E.C.N. #11508.	C
11.07.18	ECN-Lumex201800168	D

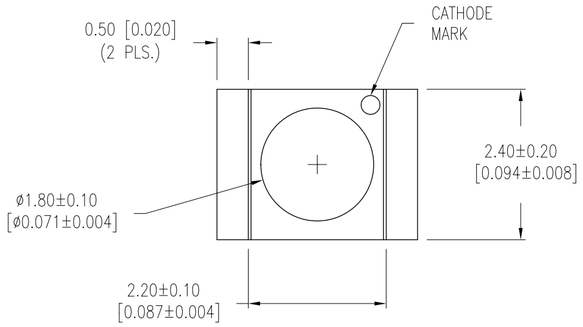

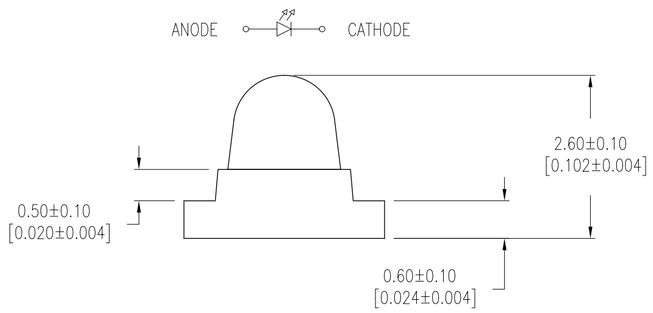

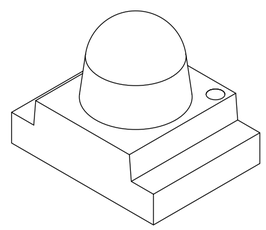

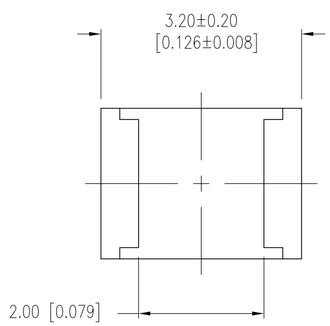

ELECTRO-OPTICAL CHARACTERISTICS $T_A = 25°C$ $I_f = 20mA$

PARAMETER	MIN	TYP	MAX	UNITS	TEST COND
PEAK WAVELENGTH		610		nm	
FORWARD VOLTAGE		2.0	2.5	V_f	
REVERSE VOLTAGE	5.0			V_r	$I_r = 100\mu A$
AXIAL INTENSITY		1500		mcd	$I_f = 20mA$
VIEWING ANGLE		50		2x theta 1/2	
EMITTED COLOR:	ORANGE				
EPOXY LENS FINISH:	WATER CLEAR				

LIMITS OF SAFE OPERATION AT 25°C

PARAMETER	MAX	UNITS
PEAK FORWARD CURRENT*	160	mA
STEADY CURRENT	30	mA
POWER DISSIPATION	100	mW
DERATE FROM 25°C	− 1.2	mW/°C
OPERATING TEMP.	−40 TO +85	°C
STORAGE TEMP.	−40 TO +85	°C

* t<10µS

CAUTION: MOISTURE SENSITIVE DEVICE
PER JEDEC LEVEL 3 STANDARDS

NOTES:

1. THE CATHODE IS ORIENTED TOWARDS THE TAPE SPROCKET HOLE.

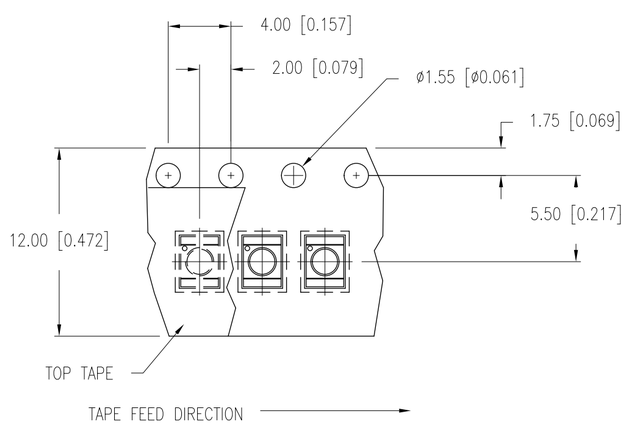

RECOMMENDED SOLDER PAD LAYOUT

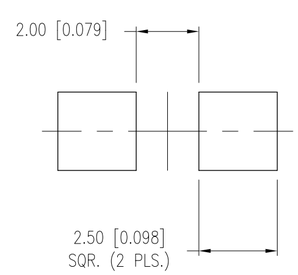

LEAD FREE REFLOW PROFILE

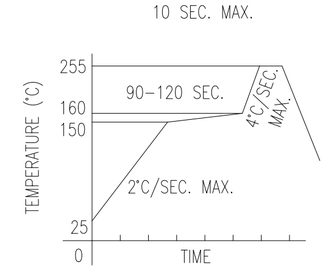

TOTAL TIME ABOVE 220°C IS 60 SECONDS MAX.

*UNLESS OTHERWISE SPECIFIED TOLERANCES PER DECIMAL PRECISION ARE: X=±1 (±0.039), X.X=±0.5 (±0.020), X.XX=±0.25 (±0.010), X.XXX=±0.127 (±0.005). LEAD SIZE=±0.05 (±0.002), LEAD LENGTH=±0.75 (±0.030). MIN= +DECIMAL PRECISION −0.00 MAX.= +0.00 −DECIMAL PRECISION

LUMEX® Creating LED and LCD Solutions Together™
425 N. GARY AVE.
CAROL STREAM, IL 60188-4900
PHONE: 800-278-5666
FAX: 630-315-2152
WEB: WWW.LUMEX.COM

3.2mm x 2.4mm SML, 610nm ORANGE LED, WATER CLEAR LENS, TAPE AND REEL.

THE SPECIFICATIONS MAY CHANGE AT ANY TIME WITHOUT NOTICE.

CONFIDENTIAL INFORMATION
THE INFORMATION CONTAINED IN THIS DOCUMENT IS THE PROPERTY OF LUMEX INC. EXCEPT AS SPECIFICALLY AUTHORIZED IN WRITING BY LUMEX INC., THE HOLDER OF THIS DOCUMENT SHALL KEEP ALL INFORMATION CONTAINED HEREIN CONFIDENTIAL AND SHALL PROTECT SAME IN WHOLE OR IN PART FROM DISCLOSURE AND DISSEMINATION TO ALL THIRD PARTIES.

DATE:	11.07.18	DRAWN BY:	C.S.
PAGE:	1 OF 1	CHKD BY:	E.C.
SCALE:	N/A	APRVD BY:	G.Y.
UNIT:	mm [INCH]	Pb	

Downloaded from Arrow.com.