CM6032V301R-10

UNCONTROLLED DOCUMENT

PHYSICAL DIMENSIONS:

A	15.24 [.600]	±	0.23 [.009]
B	8.13 [.320]	±	0.13 [.005]
B_1	10.92 [.430]		MAX
C	14.48 [.570]	±	0.25 [.010]
C_1	15.11 [.595]		MAX
D	4.06 [.160]	±	0.05 [.002]
E	1.27 [.050]	±	0.13 [.005]
E_1	2.03 [.080]	±	0.13 [.005]

WIRE DIMENSIONS:

T_1	3.30 [.130]	±	0.38 [.015]
T_2	0.64 [.025]		TYP
T_3	0.38 [.015]		TYP

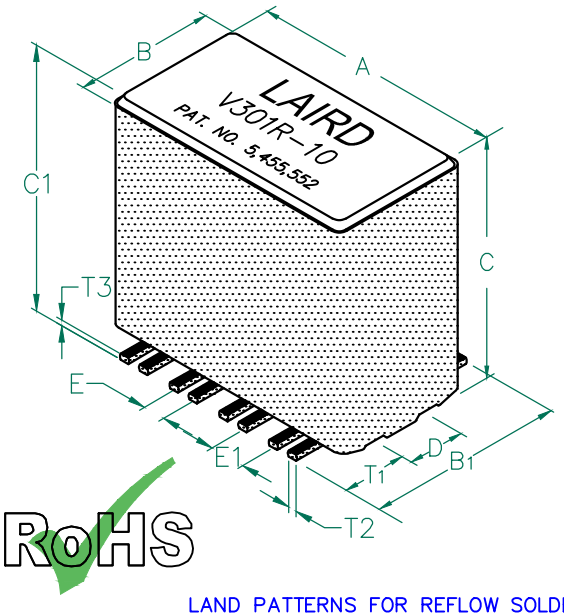

ELECTRICAL CHARACTERISTICS:			
Z @ 100MHz (Ω)		DCR (Ω)	Rated Current
Nominal	300		
Minimum	225		
Maximum	375	0.01	8,000 mA

NOTES: UNLESS OTHERWISE SPECIFIED

1. TAPED AND REELED per CURRENT EIA SPECIFICATIONS 13" REELS, 100 PCS/REEL.
2. COMPONENTS SHOULD BE ADEQUATELY PREHEATED BEFORE SOLDERING.
3. REF. CARRIER TAPE SPECIFICATION # CART6032-33.
4. TERMINATION FINISH IS 100% TIN.
5. THIS PART HAS NO PIN POLARITY.
6. OPERATION TEMPERATURE (INCLUDING SELF-HEATING): -40 ~ +125°C.

Z vs. FREQUENCY (C,O,N)

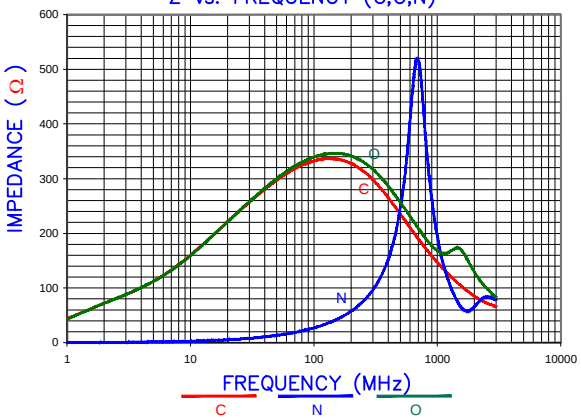

Z, R , XL vs. FREQUENCY

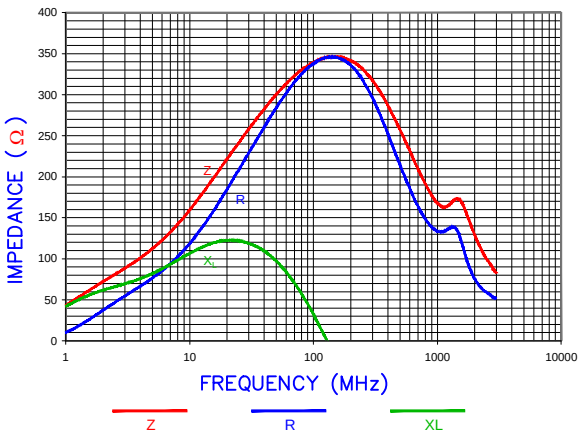

AGILENT E4991A RF Impedance/Material Analyzer
HP 16194A Test Fixture. TEST REF. 3007

LAND PATTERNS FOR REFLOW SOLDERING

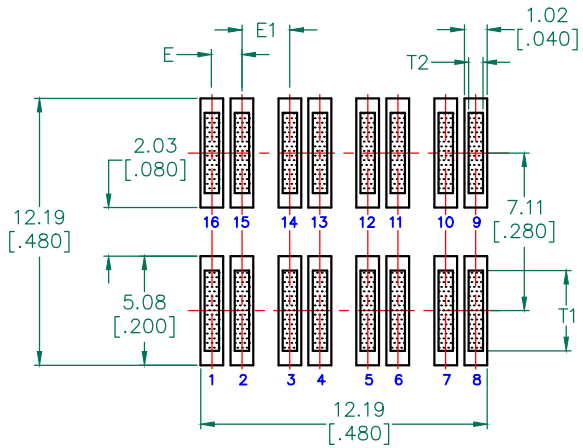

RECOMMENDED SOLDERING CONDITIONS

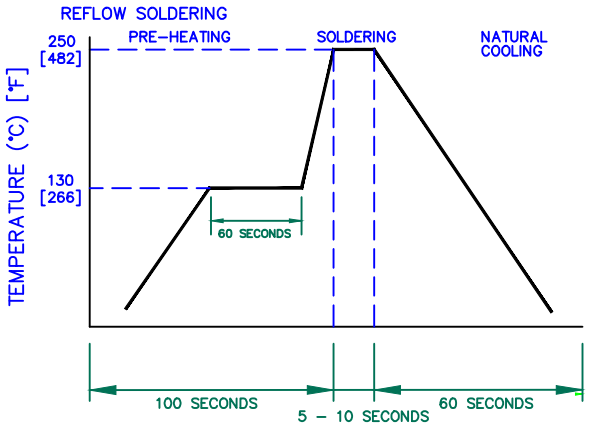

EQUIVALENT CIRCUIT

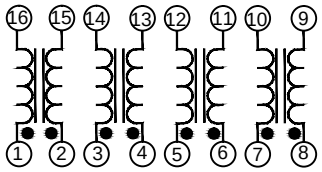

DIMENSIONS ARE IN mm [INCHES]

REV	DESCRIPTION	DATE	
E	UPDATE COMPANY LOGO & NOTE 6	08/30/12	QIU
D	UPDATE COMPANY LOGO & KAPTON LABEL ADD EQUIV. CIRCUIT	11/12/08	JRK
C	UPDATE COMPANY LOGO	01/09/07	JRK
B	CORRECT REV BLOCK mm [INCHES]	10/20/06	JRK
A	ORIGINAL DRAFT	06/11/04	JRK

This print is the property of Laird Tech. and is loaned in confidence subject to return upon request and with the understanding that no copies shall be made without the written consent of Laird Tech. All rights to design or invention are reserved.

Laird

PROJECT/PART NUMBER: CM6032V301R-10		REV: E	DRAWN BY: JRK
DATE: 06/11/04	SCALE: NTS		SHEET: 1 of 2
CAD # CM6032V301R-10-E-1	TOOL # H0600-200		

Downloaded from Arrow.com.