• SIP 8 (STA8Pin)

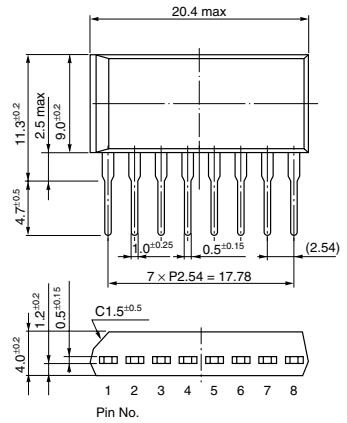


• SIP 10 (STA10Pin)

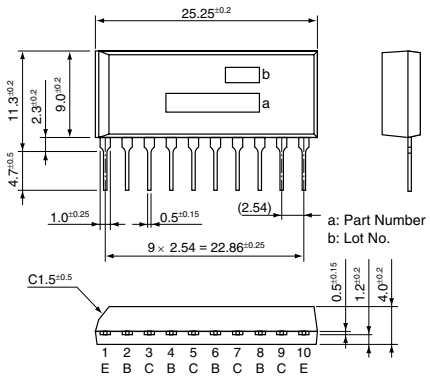


• PS 16 (Surface-Mount)

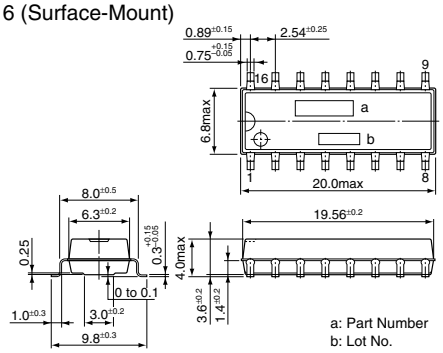


• SIP 12 (SMA12Pin)

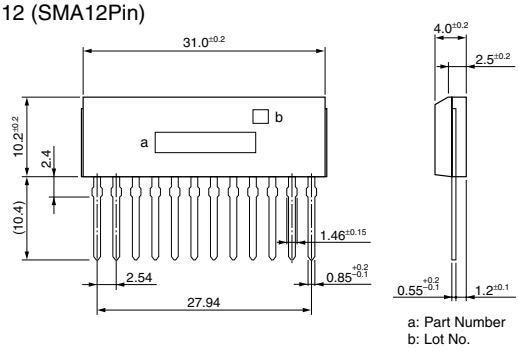


• SIP 15 (SMA15Pin)

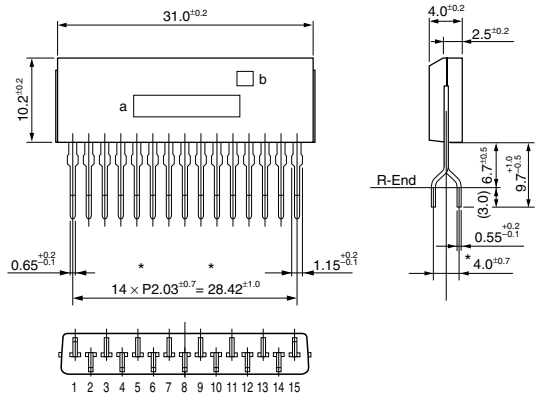


• SIP 12 with Fin (SLA12Pin)

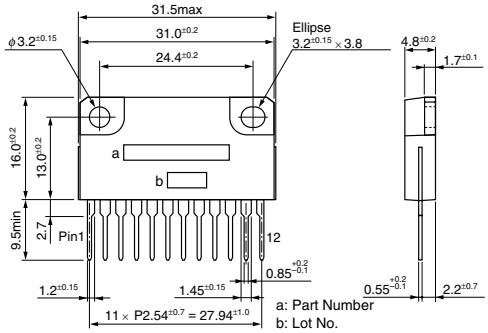


• SIP 15 with Fin (SLA15Pin)

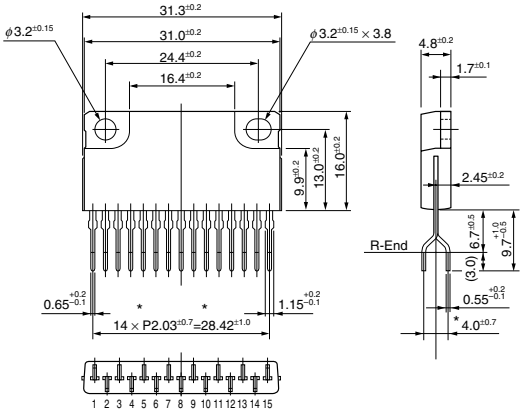


• SIP 21 with Fin (SLA21Pin)

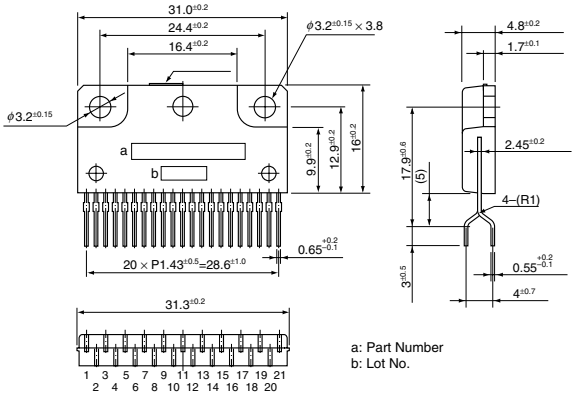


(Unit:mm)



Downloaded from Arrow.com.