Downloaded from Arrow.com.

THIS DRAWING IS UNPUBLISHED. RELEASED FOR PUBLICATION – ,– .
© COPYRIGHT – BY TYCO ELECTRONICS CORPORATION. ALL RIGHTS RESERVED.

LOC	DIST
DW	—

REVISIONS

P	LTR	DESCRIPTION	DATE	DWN	APVD
		SEE SHEET 1.			

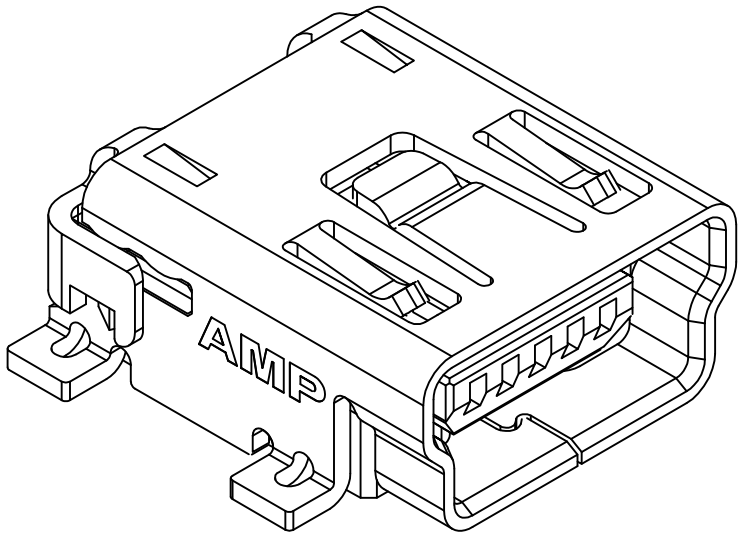

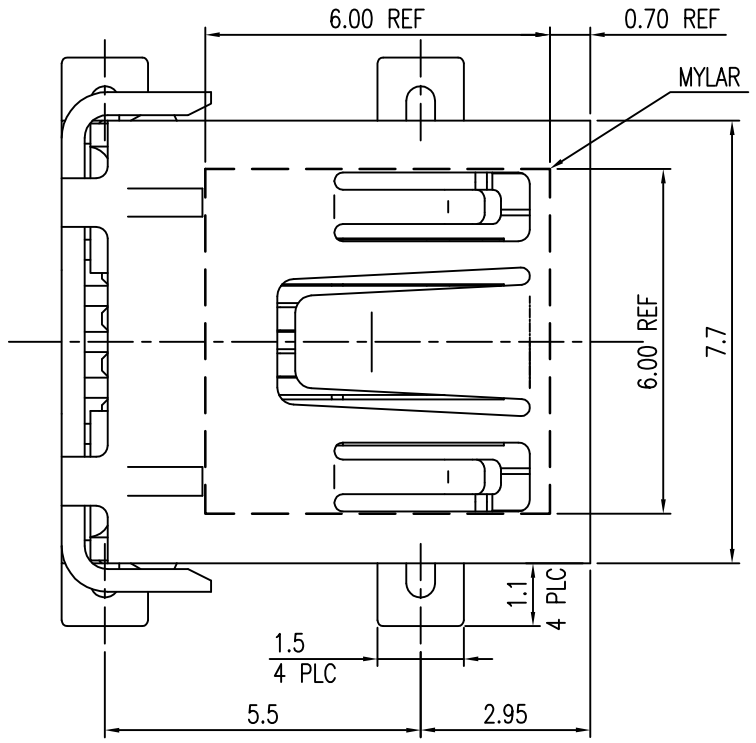

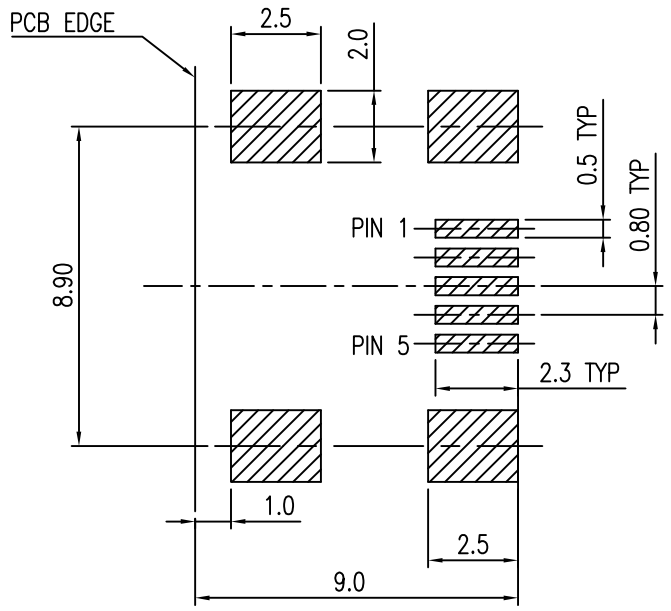

RECOMMENDED PCB LAYOUT (MOUNTING SIDE)
THICKNESS 1.57mm (TOLERANCE:±0.05)

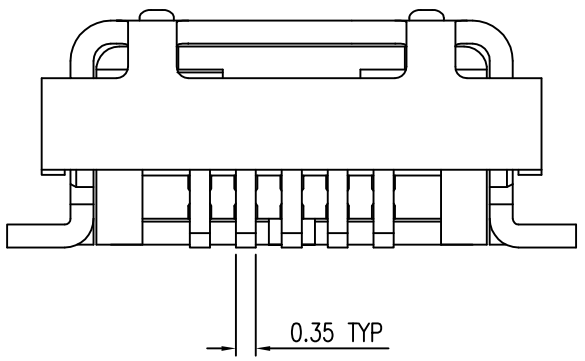

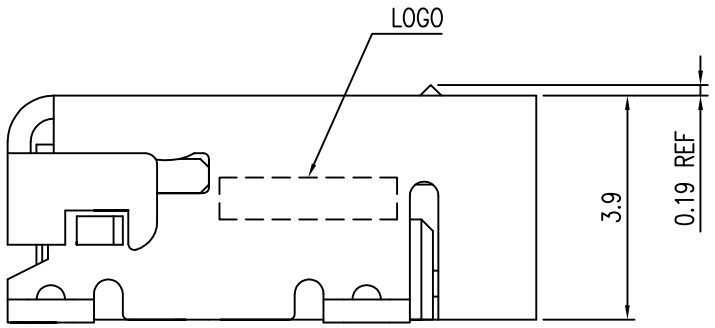

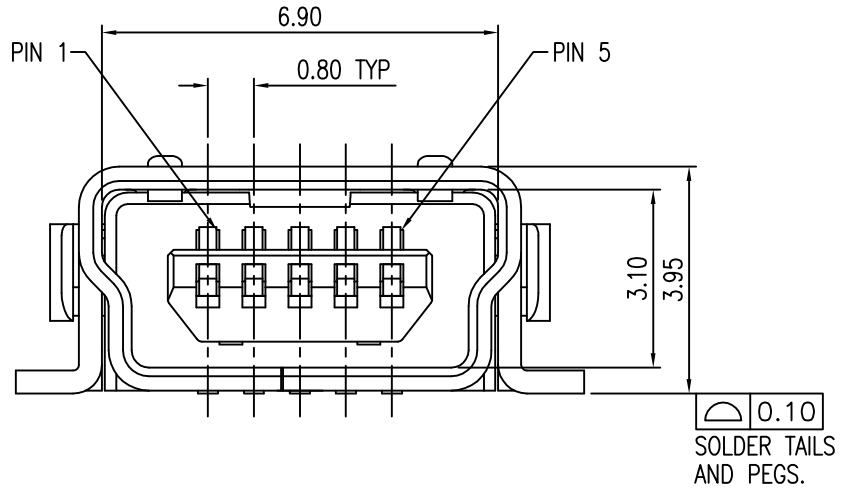

NOTE:

1. MATERIAL:
   HOUSING: PA9T WITH 33% GF, UL 94V–0, BLACK COLOR.
   CONTACTS: PHOSPHOR BRONZE.
   SHELL: SUS304,THICKNESS=0.40MM.
   MYLAR: POLYAMIDE FILM.

2. FINISH:
   CONTACTS: GOLD FLASH OVER
   0.762μm [30μ″] MIN. PALLADIUM–NICKEL PLATED ON CONTACT AREA,
   2.54μm [100μ″] MIN. MATTE–TIN ON SOLDER TAIL, WITH
   ENTIRE CONTACT UNDERPLATED 1.27μm [50μ″] MIN. NICKEL.
   SHELL: 1.27μm [50μ″] MIN. NICKEL PLATED OVERALL.

3. NO DATECODE ON PRODUCT SURFACE.

4. REFLOW SOLDER CAPABLE TO 260°C PER TE TEST SPEC. 109–201, CONDITION B.

W/	W/O	TAPE REEL	W/O	4–1734035–2
W/O	W/	TAPE REEL	W/O	1–1734035–3
	W/O	TAPE REEL	W/O	1–1734035–2
	N/A	TRAY	W/O	1–1734035–1
MYLAR	LONG CARRIER & COVER TAPE	PACKAGE	POST	PART NUMBER

THIS DRAWING IS A CONTROLLED DOCUMENT.

DIMENSIONS: MM

TOLERANCES UNLESS OTHERWISE SPECIFIED:

0 PLC	± 0.38
1 PLC	± 0.25
2 PLC	± 0.13
3 PLC	± 0.05
4 PLC	± –
ANGLES	± 3°

MATERIAL: SEE NOTE

FINISH: SEE NOTE

DWN
CHK
APVD
PRODUCT SPEC —
APPLICATION SPEC —
WEIGHT —

TE Connectivity

NAME: MINI USB, R/A, SMT, B TYPE

SIZE	CAGE CODE	DRAWING NO	RESTRICTED TO
A3	00779	C–1734035	—

CUSTOMER DRAWING | SCALE — | SHEET 2 OF 4 | REV F

AMP 1470–19 REV 31MAR2000

Downloaded from Arrow.com.

THIS DRAWING IS UNPUBLISHED. RELEASED FOR PUBLICATION – ,– .
© COPYRIGHT – BY TYCO ELECTRONICS CORPORATION. ALL RIGHTS RESERVED.

LOC	DIST
DW	—

REVISIONS

P	LTR	DESCRIPTION	DATE	DWN	APVD
		SEE SHEET 1.			

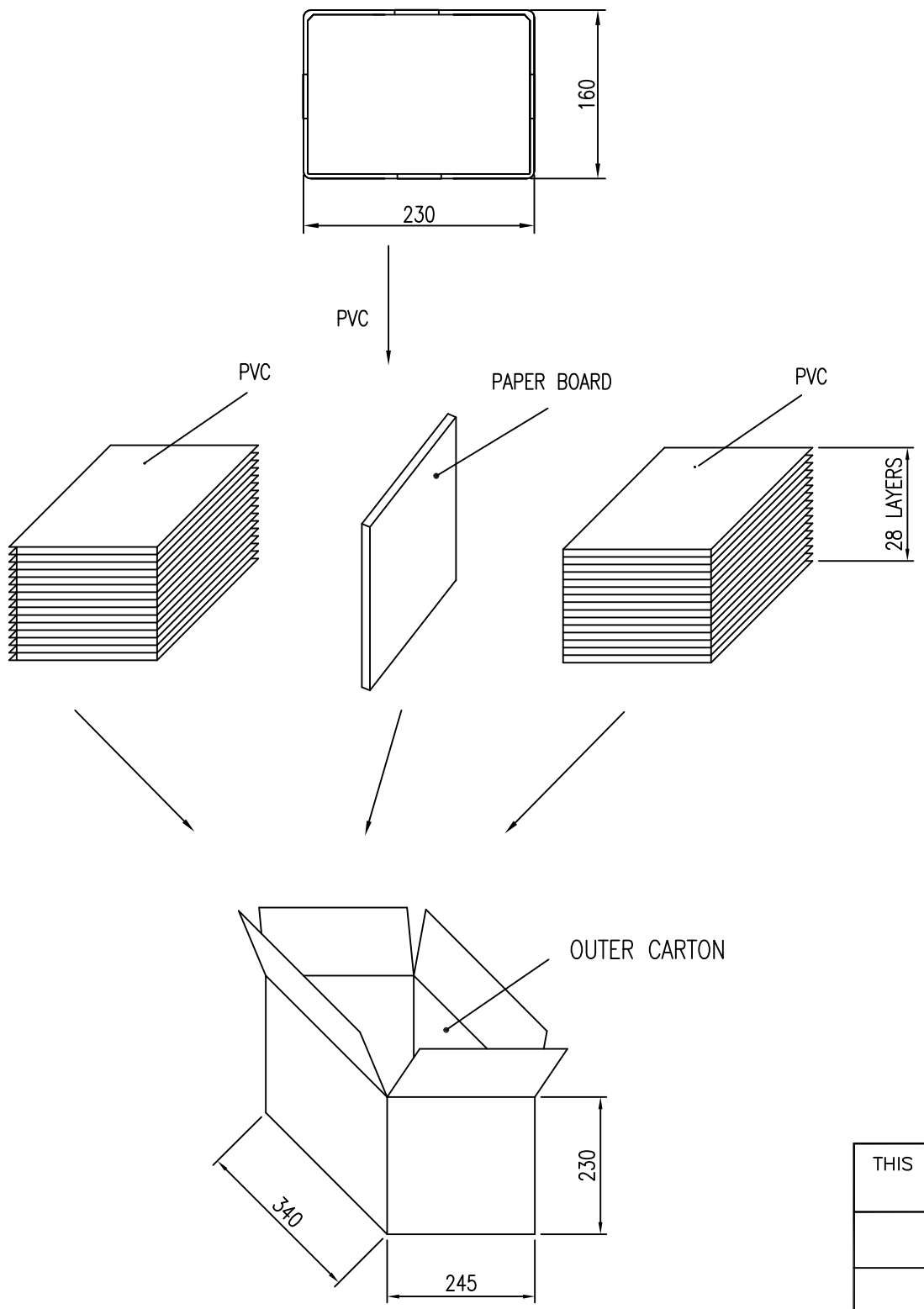

GROSS WEIGHT	NET WEIGHT	PCS/TRAY	TRAYS /CARTON	QUANTITY	PART NUMBER
8.25 Kg	5.55 Kg	150	56	8400 PCS	2–1734035–1
					1–1734035–1
					1734035–1

THIS DRAWING IS A CONTROLLED DOCUMENT.

DIMENSIONS: MM

TOLERANCES UNLESS OTHERWISE SPECIFIED:
0 PLC ± –
1 PLC ± –
2 PLC ± –
3 PLC ± –
4 PLC ± –
ANGLES ± –

MATERIAL –

FINISH –

DWN
CHK
APVD
PRODUCT SPEC —
APPLICATION SPEC —
WEIGHT —

TE Connectivity

NAME: MINI USB, R/A, SMT, B TYPE

SIZE	CAGE CODE	DRAWING NO	RESTRICTED TO
A3	00779	C–1734035	—

CUSTOMER DRAWING | SCALE — | SHEET 3 OF 4 | REV F

Downloaded from Arrow.com.

THIS DRAWING IS UNPUBLISHED. RELEASED FOR PUBLICATION –,– .
© COPYRIGHT – BY TYCO ELECTRONICS CORPORATION. ALL RIGHTS RESERVED.

LOC	DIST
DW	—

REVISIONS

P	LTR	DESCRIPTION	DATE	DWN	APVD
		SEE SHEET 1.			

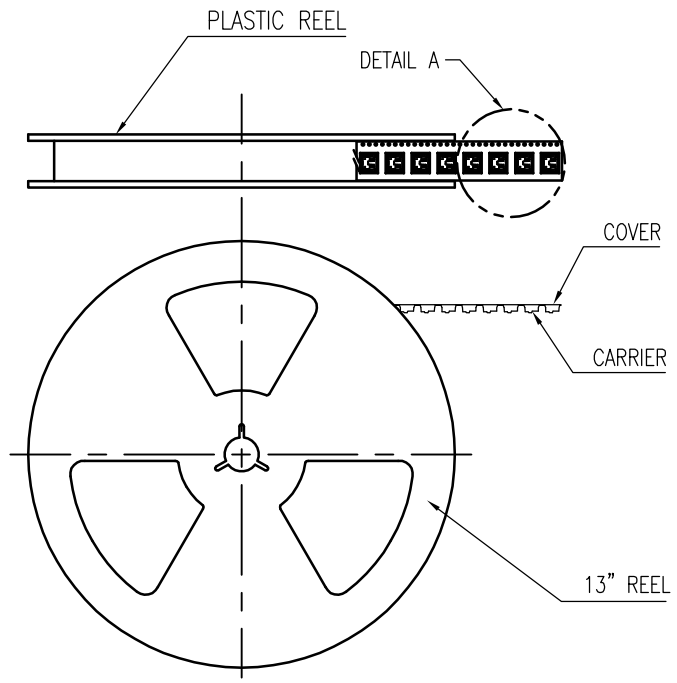

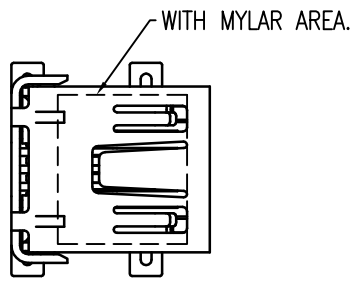

VIEW A

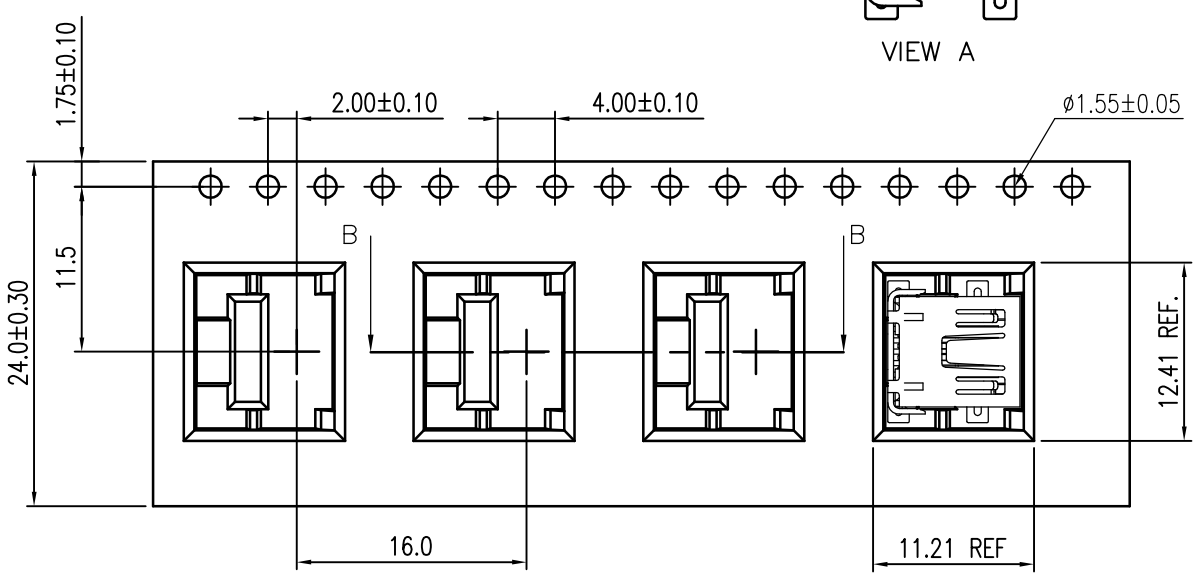

DETAIL A

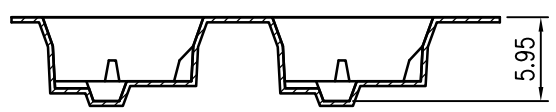

SECTION B–B

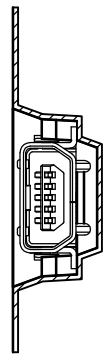

FOR 1734035–3, 1–1734035–3 AND 2–1734035–3 (LONG CARRIER & COVER TAPE)

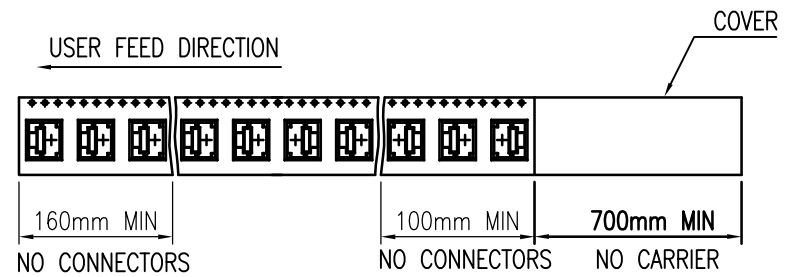

FOR 1734035–2, 1734035–4, 1734035–5, 1–1734035–2,
3–1734035–2, 2–1734035–2, 2–1734035–4, 4–1734035–2

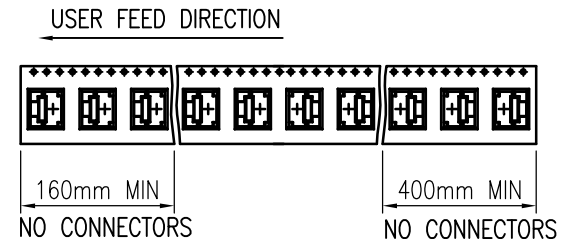

GROSS WEIGHT	NET WEIGHT	PCS/REER	REERS /CARTON	QUANTITY	MYLAR	LONG CARRIER & COVER TAPE	PART NUMBER
4.95 Kg	2.31 Kg	700	5	3500	W/	W/O	4–1734035–2
					W/O	W/O	3–1734035–2
					W/	W/O	2–1734035–4
					W/O	W/	2–1734035–3
					W/O	W/O	2–1734035–2
					W/O	W/	1–1734035–3
					W/O	W/O	1–1734035–2
					W/	W/O	1734035–5
					W/	W/O	1734035–4
					W/O	W/	1734035–3
					W/O	W/O	1734035–2

5 LAYER

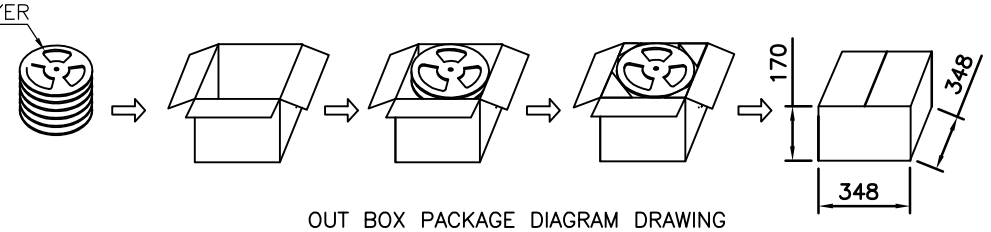

OUT BOX PACKAGE DIAGRAM DRAWING

THIS DRAWING IS A CONTROLLED DOCUMENT.

DIMENSIONS: MM	TOLERANCES UNLESS OTHERWISE SPECIFIED:
	0 PLC ± –
	1 PLC ± –
	2 PLC ± –
	3 PLC ± –
	4 PLC ± –
	ANGLES ± –
MATERIAL –	FINISH –

DWN
CHK
APVD
PRODUCT SPEC —
APPLICATION SPEC —
WEIGHT —

TE Connectivity

NAME: MINI USB, R/A, SMT, B TYPE

SIZE	CAGE CODE	DRAWING NO	RESTRICTED TO
A3	00779	C–1734035	—

CUSTOMER DRAWING | SCALE — | SHEET 4 OF 4 | REV F