Downloaded from Arrow.com.

© COPYRIGHT TRP CONNECTOR ALL RIGHTS RESERVED.

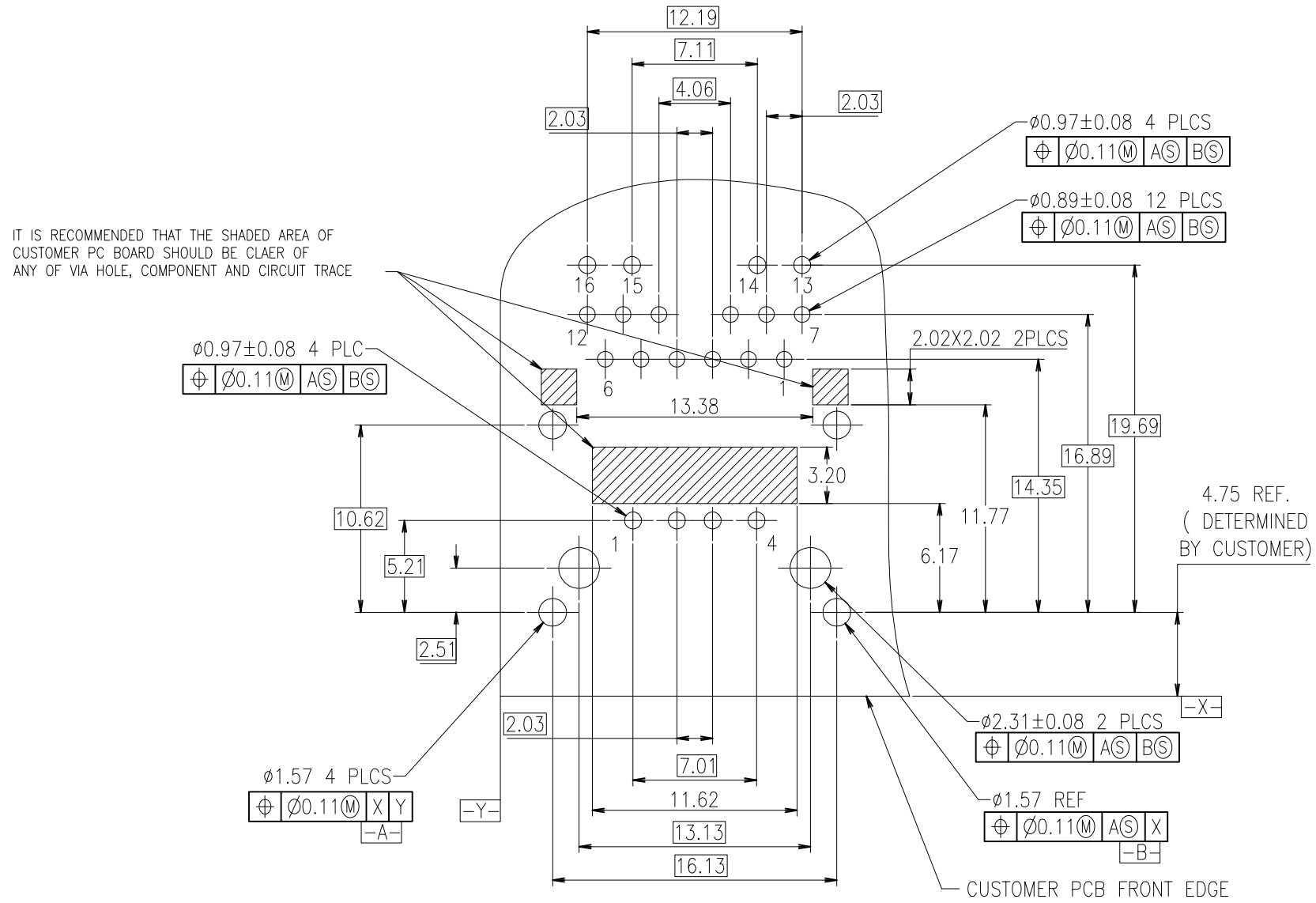

SUGGESTED PCB FOOTPRINT COMPONENT SIDE SHOWN

URG18 GIGABIT CIRCUIT △2

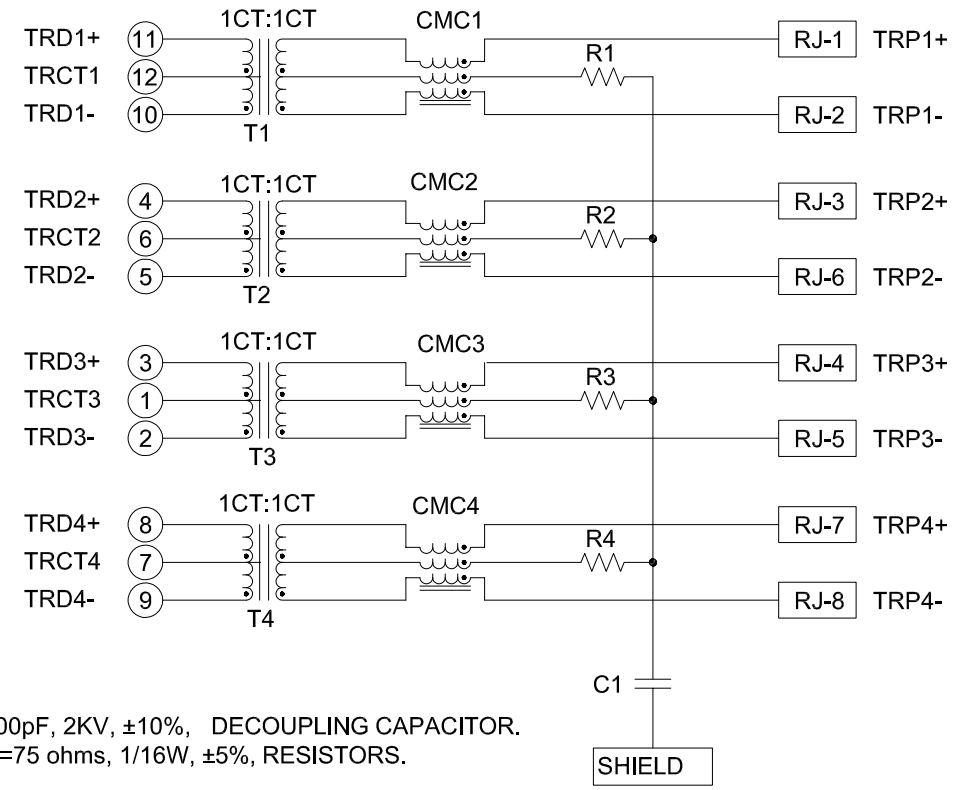

CI=1000pF, 2KV, ±10%, DECOUPLING CAPACITOR.
R1-R4=75 ohms, 1/16W, ±5%, RESISTORS.

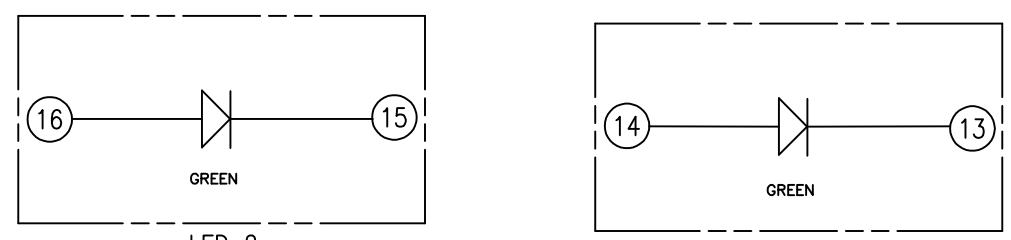

1840024-1, 1-1840024-1

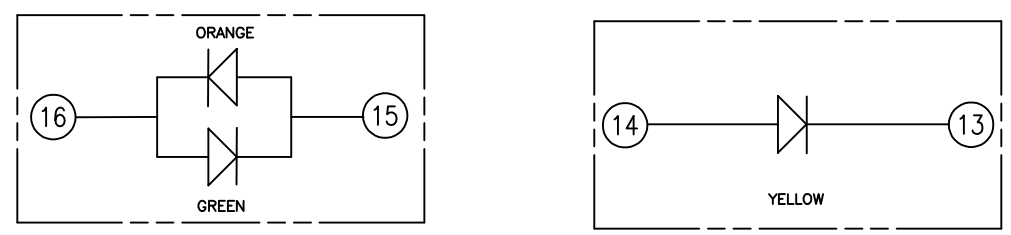

1840024-2

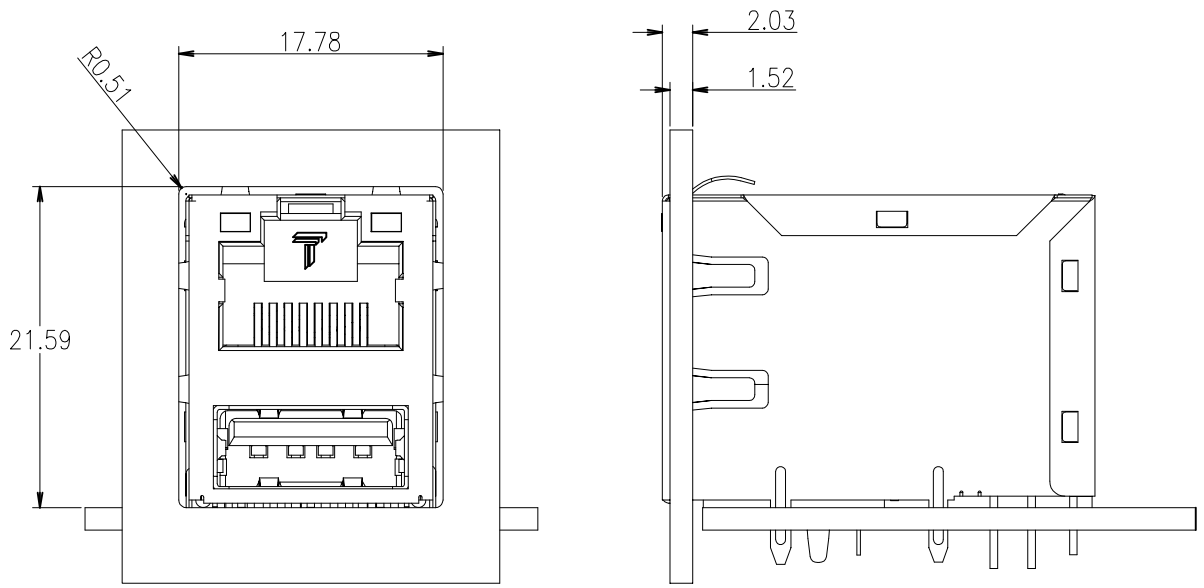

SUGGESTED PANEL CUT-OUT DIMENSION

THIS DRAWING IS A CONTROLLED DOCUMENT.	DWN SKY ZHAO 03MAR2008	trp CONNECTOR a bel group	DONGGUAN CHINA
DIMENSIONS: mm	CHK KEITH ZHU 03MAR2008		
TOLERANCES UNLESS OTHERWISE SPECIFIED: 0 PLC – ; 1 PLC – ; 2 PLC ± 0.25 ; 3 PLC ± 0.25 ; 4 PLC – ; ANGLES –	APVD TEDDY XIONG 03MAR2008	DESC: MAGJACK OVER SINGLE USB URG18, GIGABIT CIRCUIT, W/ LEDS	
PRODUCT SPEC 108-104005	MODEL NAME: MAGJACK OVER USB NON-PoE	SIZE A2 / CAGE CODE / DRAWING NO Ⓒ-1840024	RESTRICTED TO –
APPLICATION SPEC –	CUSTOMER DRAWING	SCALE 3:1 / SHEET 2 OF 2	REV E

xxxxx