THIS DRAWING IS UNPUBLISHED. RELEASED FOR PUBLICATION
© COPYRIGHT BY TYCO ELECTRONICS CORPORATION. ALL RIGHTS RESERVED.

LOC	DIST
FB	00

REVISIONS

P	LTR	DESCRIPTION	DATE	DWN	APVD
	-	SEE SHEET 1	-	-	-

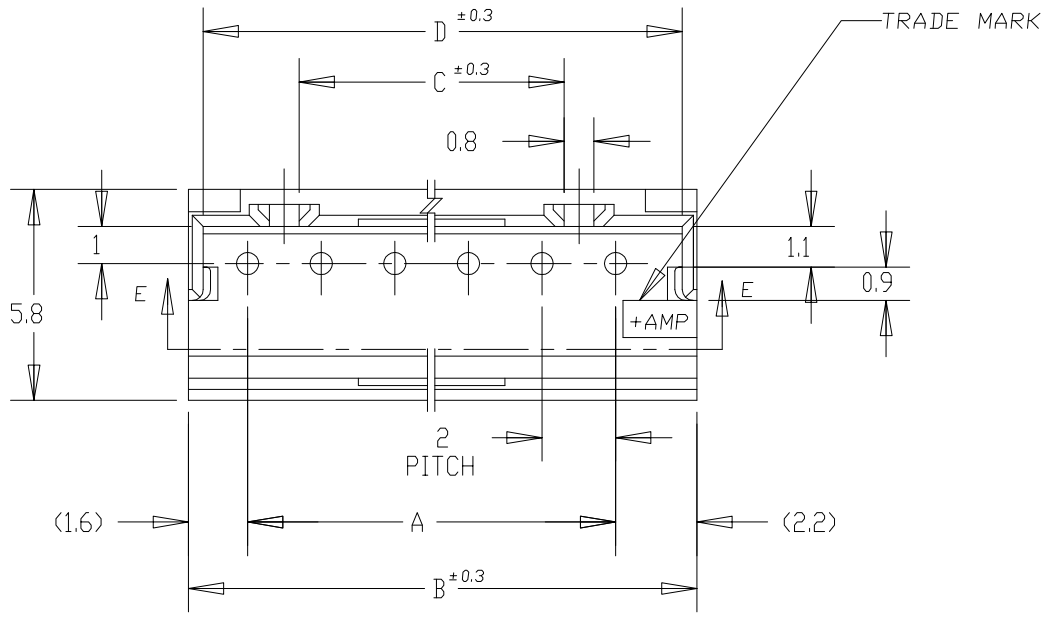

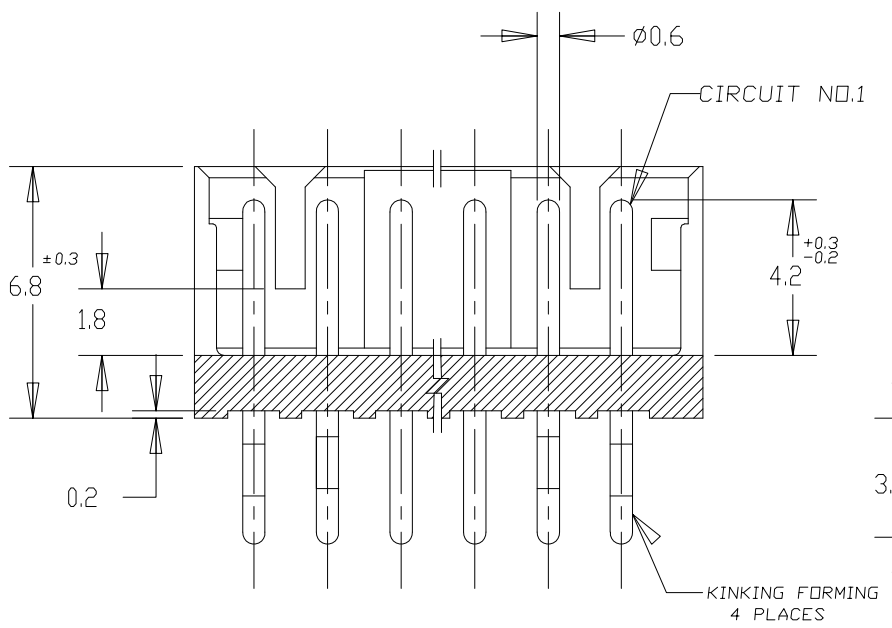

SECT E-E

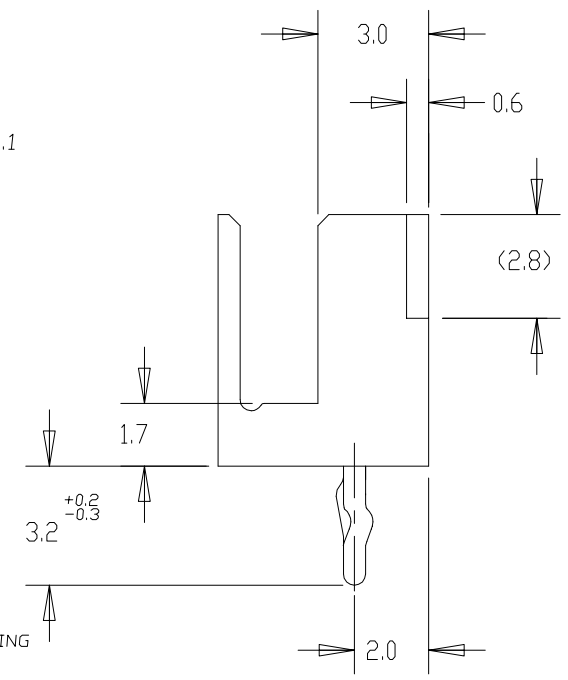

6~15 Pos.

NOTES;

1. MATERIAL:HOUSING - 66 NYLON (UL94V-0)
   POST - TIN BRASS

	7-292132-5	5-292132-5	3-292132-5	1-292132-5	15	28	31.8	25.2	31.0
	7- -4	5- -4	3- -4	1- -4	14	26	29.8	23.2	29.0
	7- -3	5- -3	3- -3	1- -3	13	24	27.8	21.2	27.0
	7- -2	5- -2	3- -2	1- -2	12	22	25.8	19.2	25.0
	7- -1	5- -1	3- -1	1- -1	11	20	23.8	17.2	23.0
	7- -0	5- -0	3- -0	1- -0	10	18	21.8	15.2	21.0
	6- -9	4- -9	2- -9	-9	9	16	19.8	13.2	19.0
	6- -8	4- -8	2- -8	-8	8	14	17.8	11.2	17.0
	6- -7	4- -7	2- -7	-7	7	12	15.8	9.2	15.0
8-292132-6	6- -6	4- -6	2- -6	-6	6	10	13.8	7.2	13.0
	6- -5	4- -5	2- -5	-5	(SEE SHEET 1 OF 2)				
	6- -4	4- -4	2- -4	-4					
	6- -3	4- -3	2- -3	-3					
	6-292132-2	4-292132-2	2-292132-2	292132-2					
RED	BLACK	YELLOW	BLUE	NATURAL	Pos.	A	B	C	D
PART NO.									

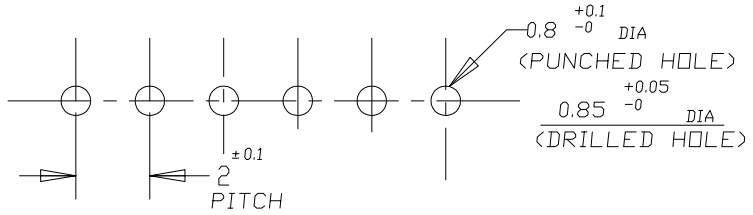

RECOMMENDABLE P.C.BOARD LAYOUT

(PCB THK:0.8-1.6)

THIS DRAWING IS A CONTROLLED DOCUMENT FOR TYCO ELECTRONICS CORPORATION IT IS SUBJECT TO CHANGE AND THE CONTROLLING ENGINEERING ORGANIZATION SHOULD BE CONTACTED FOR THE LATEST REVISION.

DIMENSIONS: MM

TOLERANCES UNLESS OTHERWISE SPECIFIED: ±0.2
0 PLC ±
1 PLC ±
2 PLC ±
3 PLC ±
4 PLC ±
ANGLES ±

MATERIAL 1

FINISH 1

DWN
CHK
APVD
PRODUCT SPEC
APPLICATION SPEC
WEIGHT

tyco Electronics

Tyco Electronics Corporation
Shanghai, P.R.China,200233

NAME

POST HEADER ASS'Y (BOX-V DIP)
(AMP CT CONNECTOR 2mm PITCH)

SIZE	CAGE CODE	DRAWING NO	RESTRICTED TO
A3	00779	C-292132	-

CUSTOMER DRAWING | SCALE 5:1 | SHEET 2 OF 2 | REV A2

AMP 1470-19 REV 31MAR2000

Downloaded from Arrow.com.