THIS DRAWING IS UNPUBLISHED. RELEASED FOR PUBLICATION – ,– .
© COPYRIGHT – By – ALL RIGHTS RESERVED.

LOC	DIST
AJ	00

REVISIONS

P	LTR	DESCRIPTION	DATE	DWN	APVD
	–	SEE SHEET 1	–	–	–

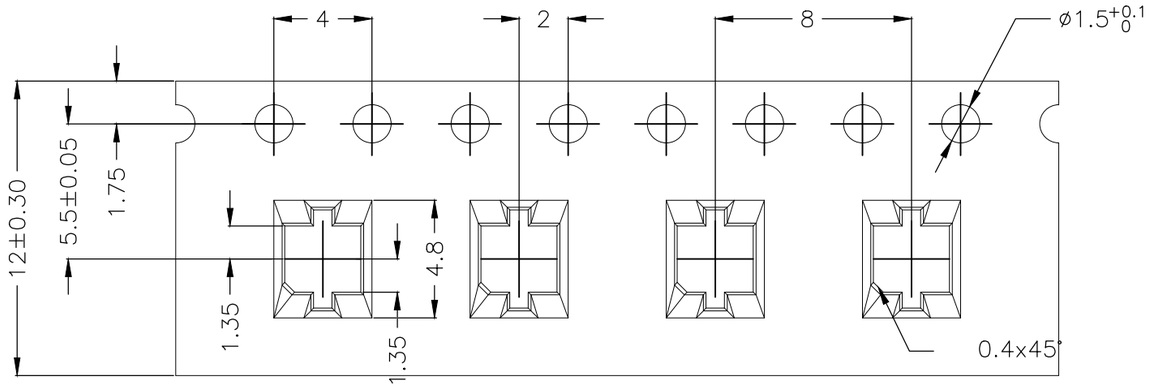

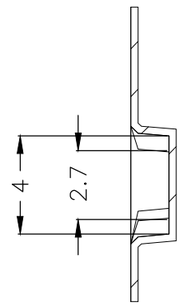

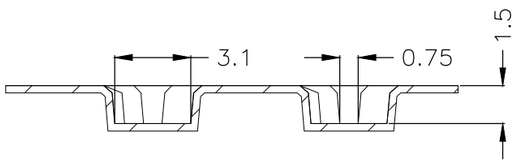

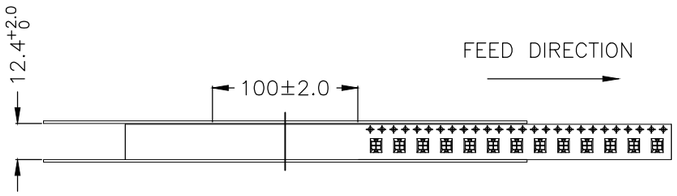

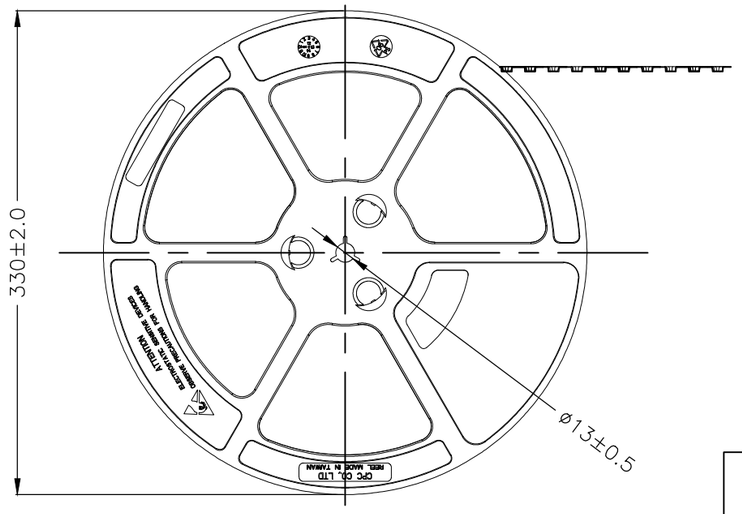

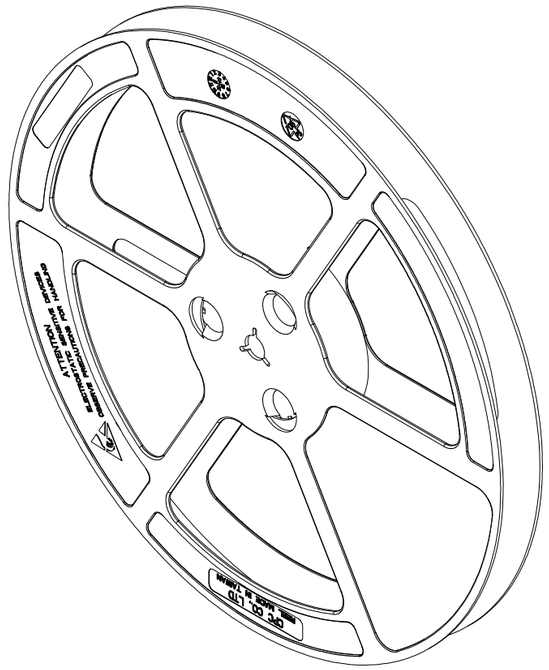

THIS DRAWING IS A CONTROLLED DOCUMENT.

DIMENSIONS: mm [INCHES]

TOLERANCES UNLESS OTHERWISE SPECIFIED:

0 PLC	± 0.15
1 PLC	± 0.10
2 PLC	± 0.10
3 PLC	± –
4 PLC	± –
ANGLES	± 3°

MATERIAL: SEE NOTE

FINISH: SEE NOTE

DWN	GARY GAO	16Aug2010
CHK	RITA ZUO	16Aug2010
APVD	JONGSENG GOH	16Aug2010

PRODUCT SPEC: 108–112005

APPLICATION SPEC: –

WEIGHT: –

TE Connectivity

NAME: MINI. RF HEADER

SIZE	CAGE CODE	DRAWING NO	RESTRICTED TO
A3	00779	C-1909763	–

CUSTOMER DRAWING

SCALE	SHEET	REV
NTS	2 OF 2	B3

Downloaded from Arrow.com.