OBSOLETE – PART DISCONTINUED

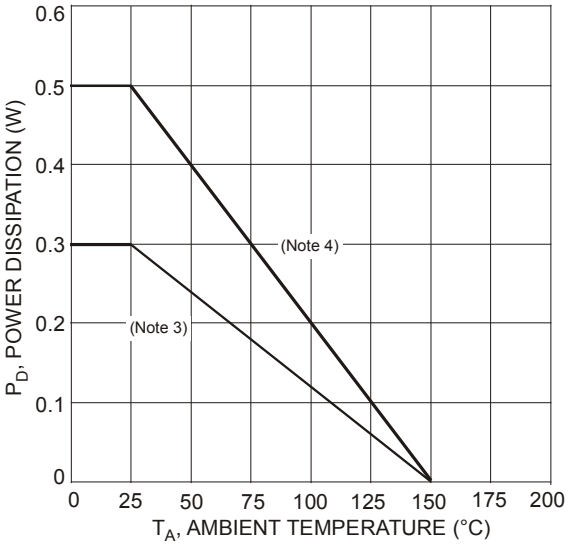

Fig. 1 Power Dissipation vs. Ambient Temperature

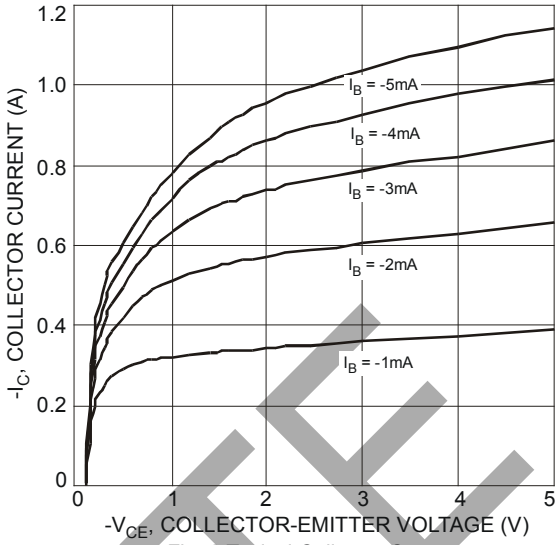

Fig. 2 Typical Collector Current vs. Collector-Emitter Voltage

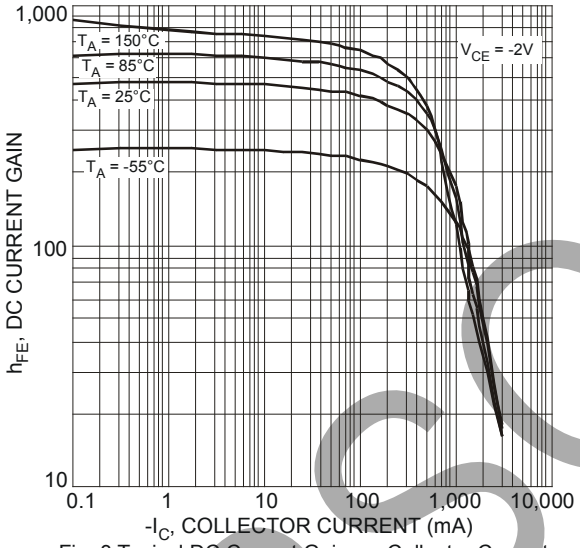

Fig. 3 Typical DC Current Gain vs. Collector Current

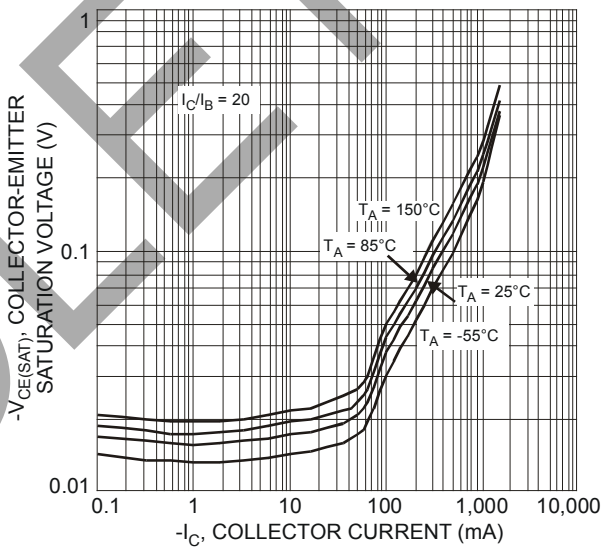

Fig. 4 Typical Collector-Emitter Saturation Voltage vs. Collector Current

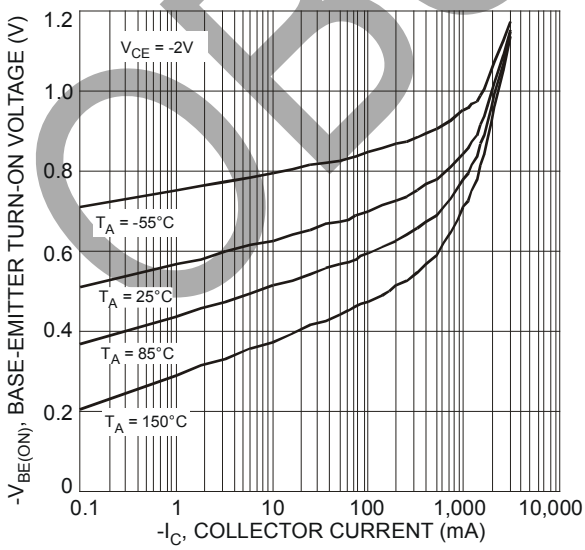

Fig. 5 Typical Base-Emitter Turn-On Voltage vs. Collector Current

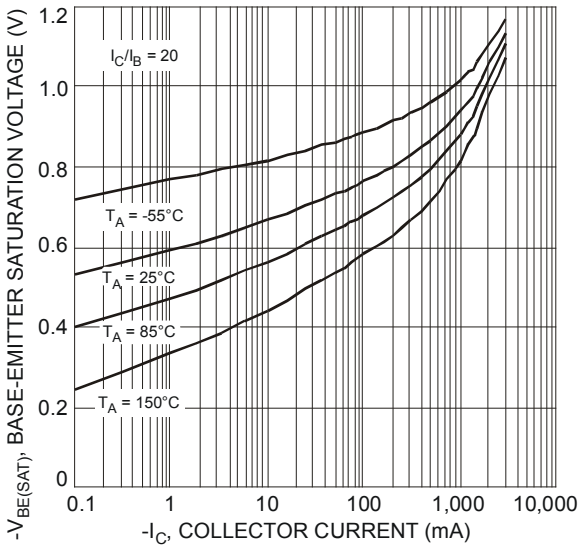

Fig. 6 Typical Base-Emitter Saturation Voltage vs. Collector Current

OBSOLETE

© Diodes Incorporated
Downloaded from Arrow.com.

OBSOLETE – PART DISCONTINUED

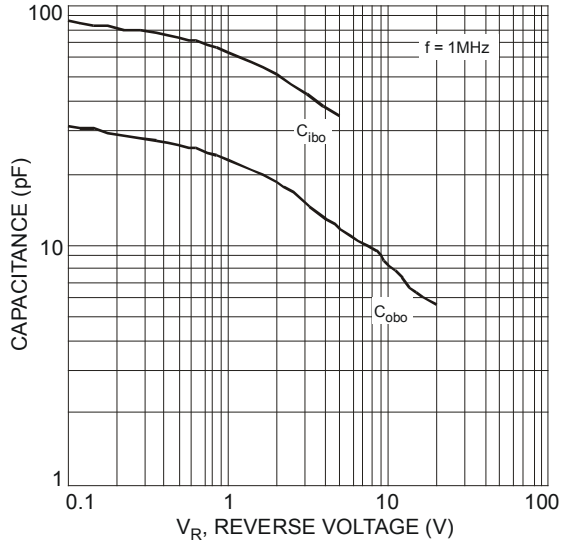

Fig. 7 Typical Capacitance Characteristics

Ordering Information (Note 6)

Part Number	Case	Packaging
2DB1689-7	SOT-323	3000/Tape & Reel

Notes: 6. For packaging details, go to our website at http://www.diodes.com/datasheets/ap02007.pdf.

Marking Information

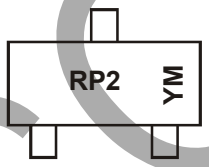

RP2 = Product Type Marking Code
YM = Date Code Marking
Y = Year (ex: V = 2008)
M = Month (ex: 9 = September)

Date Code Key

Year	2008	2009	2010	2011	2012	2013	2014	2015
Code	V	W	X	Y	Z	A	B	C

Month	Jan	Feb	Mar	Apr	May	Jun	Jul	Aug	Sep	Oct	Nov	Dec
Code	1	2	3	4	5	6	7	8	9	O	N	D

Package Outline Dimensions

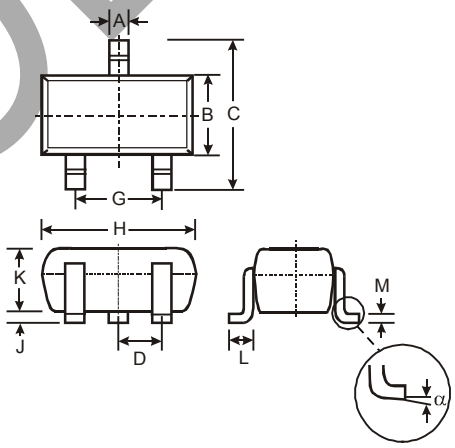

SOT-323			
Dim	Min	Max	Typ
A	0.25	0.40	0.30
B	1.15	1.35	1.30
C	2.00	2.20	2.10
D	-	-	0.65
G	1.20	1.40	1.30
H	1.80	2.20	2.15
J	0.0	0.10	0.05
K	0.90	1.00	1.00
L	0.25	0.40	0.30
M	0.10	0.18	0.11
α	0°	8°	-
All Dimensions in mm			

OBSOLETE

© Diodes Incorporated
Downloaded from Arrow.com.

OBSOLETE – PART DISCONTINUED

Suggested Pad Layout

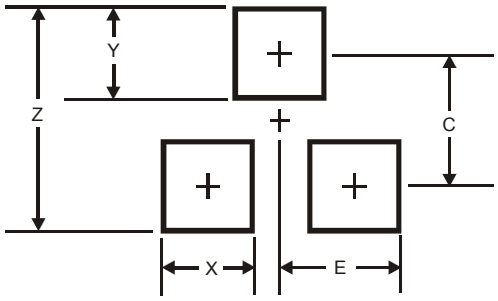

Dimensions	Value (in mm)
Z	2.8
X	0.7
Y	0.9
C	1.9
E	1.0

OBSOLETE

© Diodes Incorporated
Downloaded from Arrow.com.

OBSOLETE – PART DISCONTINUED

IMPORTANT NOTICE

1. DIODES INCORPORATED AND ITS SUBSIDIARIES ("DIODES") MAKE NO WARRANTY OF ANY KIND, EXPRESS OR IMPLIED, WITH REGARDS TO ANY INFORMATION CONTAINED IN THIS DOCUMENT, INCLUDING, BUT NOT LIMITED TO, THE IMPLIED WARRANTIES OF MERCHANTABILITY, FITNESS FOR A PARTICULAR PURPOSE OR NON-INFRINGEMENT OF THIRD PARTY INTELLECTUAL PROPERTY RIGHTS (AND THEIR EQUIVALENTS UNDER THE LAWS OF ANY JURISDICTION).

2. The Information contained herein is for informational purpose only and is provided only to illustrate the operation of Diodes products described herein and application examples. Diodes does not assume any liability arising out of the application or use of this document or any product described herein. This document is intended for skilled and technically trained engineering customers and users who design with Diodes products. Diodes products may be used to facilitate safety-related applications; however, in all instances customers and users are responsible for (a) selecting the appropriate Diodes products for their applications, (b) evaluating the suitability of the Diodes products for their intended applications, (c) ensuring their applications, which incorporate Diodes products, comply the applicable legal and regulatory requirements as well as safety and functional-safety related standards, and (d) ensuring they design with appropriate safeguards (including testing, validation, quality control techniques, redundancy, malfunction prevention, and appropriate treatment for aging degradation) to minimize the risks associated with their applications.

3. Diodes assumes no liability for any application-related information, support, assistance or feedback that may be provided by Diodes from time to time. Any customer or user of this document or products described herein will assume all risks and liabilities associated with such use, and will hold Diodes and all companies whose products are represented herein or on Diodes' websites, harmless against all damages and liabilities.

4. Products described herein may be covered by one or more United States, international or foreign patents and pending patent applications. Product names and markings noted herein may also be covered by one or more United States, international or foreign trademarks and trademark applications. Diodes does not convey any license under any of its intellectual property rights or the rights of any third parties (including third parties whose products and services may be described in this document or on Diodes' website) under this document.

5. Diodes products are provided subject to Diodes' Standard Terms and Conditions of Sale (https://www.diodes.com/about/company/terms-and-conditions/terms-and-conditions-of-sales/) or other applicable terms. This document does not alter or expand the applicable warranties provided by Diodes. Diodes does not warrant or accept any liability whatsoever in respect of any products purchased through unauthorized sales channel.

6. Diodes products and technology may not be used for or incorporated into any products or systems whose manufacture, use or sale is prohibited under any applicable laws and regulations. Should customers or users use Diodes products in contravention of any applicable laws or regulations, or for any unintended or unauthorized application, customers and users will (a) be solely responsible for any damages, losses or penalties arising in connection therewith or as a result thereof, and (b) indemnify and hold Diodes and its representatives and agents harmless against any and all claims, damages, expenses, and attorney fees arising out of, directly or indirectly, any claim relating to any noncompliance with the applicable laws and regulations, as well as any unintended or unauthorized application.

7. While efforts have been made to ensure the information contained in this document is accurate, complete and current, it may contain technical inaccuracies, omissions and typographical errors. Diodes does not warrant that information contained in this document is error-free and Diodes is under no obligation to update or otherwise correct this information. Notwithstanding the foregoing, Diodes reserves the right to make modifications, enhancements, improvements, corrections or other changes without further notice to this document and any product described herein. This document is written in English but may be translated into multiple languages for reference. Only the English version of this document is the final and determinative format released by Diodes.

8. Any unauthorized copying, modification, distribution, transmission, display or other use of this document (or any portion hereof) is prohibited. Diodes assumes no responsibility for any losses incurred by the customers or users or any third parties arising from any such unauthorized use.

Copyright © 2021 Diodes Incorporated

www.diodes.com

OBSOLETE

Downloaded from Arrow.com.