## 1.0 ELECTRICAL CHARACTERISTICS

### Absolute Maximum Ratings(†)

$V_{CC}$ ..... 6.5V

All inputs and outputs w.r.t. $V_{SS}$ ..... -0.6V to $V_{CC}$ +1.0V

Storage temperature ..... -65°C to +150°C

Ambient temperature with power applied ..... -40°C to +125°C

ESD protection on all pins ..... 4 kV

† NOTICE: Stresses above those listed under “Absolute Maximum Ratings” may cause permanent damage to the device. This is a stress rating only and functional operation of the device at those or any other conditions above those indicated in the operational listings of this specification is not implied. Exposure to maximum rating conditions for extended periods may affect device reliability.

**TABLE 1-1: DC CHARACTERISTICS**

| All Parameters apply across the recommended operating ranges unless otherwise noted | Industrial (I): $T_A$ = -40°C to +85°C, $V_{CC}$ = 1.8V to 5.5V<br>Automotive (E) $T_A$ = -40°C to +125°C, $V_{CC}$ = 4.5V to 5.5V | | | | |
|---|---|---|---|---|---|
| **Parameter** | **Symbol** | **Min.** | **Max.** | **Units** | **Conditions** |
| SCL and SDA pins: | | | | | |
| High-level input voltage | $V_{IH}$ | 0.7 $V_{CC}$ | — | V | **(Note)** |
| Low-level input voltage | $V_{IL}$ | — | 0.3 $V_{CC}$ | V | **(Note)** |
| Hysteresis of Schmitt Trigger inputs | $V_{HYS}$ | .05 $V_{CC}$ | — | V | $V_{CC} \geq$ 2.5V **(Note)** |
| Low-level output voltage | $V_{OL}$ | — | 0.4 | V | $I_{OL}$ = 3.0 mA, $V_{CC}$ = 4.5V<br>$I_{OL}$ = 2.1 mA, $V_{CC}$ = 2.5V |
| Input leakage current | $I_{LI}$ | — | ±1 | µA | $V_{IN}$ = $V_{CC}$ or $V_{SS}$ |
| Output leakage current | $I_{LO}$ | — | ±1 | µA | $V_{OUT}$ = $V_{CC}$ or $V_{SS}$ |
| Pin capacitance (all inputs/outputs) | $C_{IN}$, $C_{OUT}$ | — | 10 | pF | $V_{CC}$ = 5.0V **(Note)**<br>$T_A$ = 25°C, $F_{CLK}$ = 1 MHz |
| Operating current | $I_{CC}$ Write | — | 2 | mA | $V_{CC}$ = 5.5V, SCL = 400 kHz |
| | $I_{CC}$ Read | — | 1 | mA | $V_{CC}$ = 5.5V, SCL = 400 kHz |
| Standby current | $I_{CCS}$ | — | 1 | µA | $V_{CC}$ = 5.5V, SDA = SCL = $V_{CC}$ |

**Note:** This parameter is periodically sampled and not 100% tested.

**FIGURE 1-1: BUS TIMING DATA**

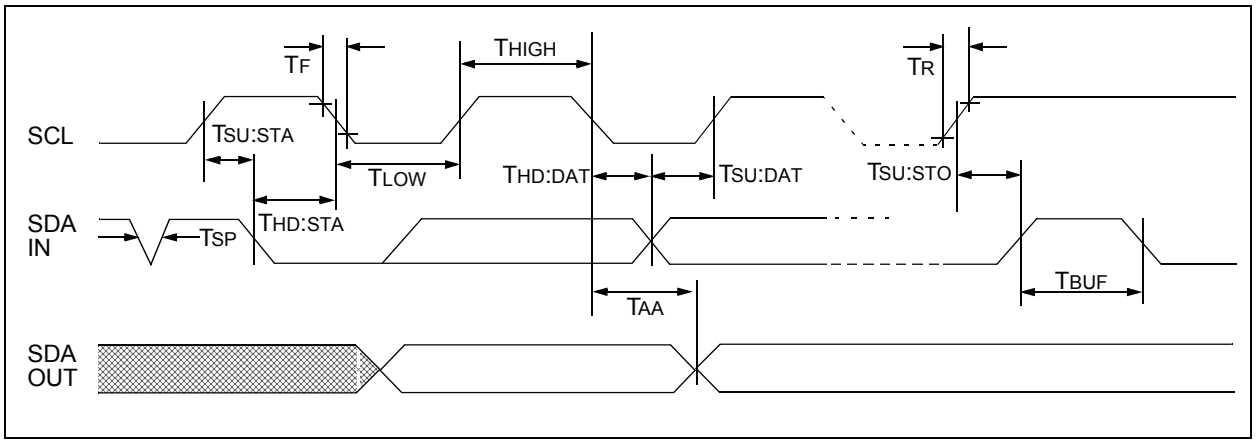



© 1996-2011 Microchip Technology Inc.

Downloaded from Arrow.com.

**TABLE 1-2: AC CHARACTERISTICS**

| All Parameters apply across all recommended operating ranges unless otherwise noted | Industrial (I): $T_A$ = -40°C to +85°C, $V_{CC}$ = 1.8V to 5.5V<br>Automotive (E): $T_A$ = -40°C to +125°C, $V_{CC}$ = 4.5V to 5.5V | | | | |
|---|---|---|---|---|---|
| **Parameter** | **Symbol** | **Min** | **Max** | **Units** | **Conditions** |
| Clock frequency | $F_{CLK}$ | —<br>—<br>— | 100<br>100<br>400 | kHz | 4.5V ≤ Vcc ≤ 5.5V (E Temp range)<br>1.8V ≤ Vcc ≤ 4.5V<br>4.5V ≤ Vcc ≤ 5.5V |
| Clock high time | $T_{HIGH}$ | 4000<br>4000<br>600 | —<br>—<br>— | ns | 4.5V ≤ Vcc ≤ 5.5V (E Temp range)<br>1.8V ≤ Vcc ≤ 4.5V<br>4.5V ≤ Vcc ≤ 5.5V |
| Clock low time | $T_{LOW}$ | 4700<br>4700<br>1300 | —<br>—<br>— | ns | 4.5V ≤ Vcc ≤ 5.5V (E Temp range)<br>1.8V ≤ Vcc ≤ 4.5V<br>4.5V ≤ Vcc ≤ 5.5V |
| SDA and SCL rise time **(Note 1)** | $T_R$ | —<br>—<br>— | 1000<br>1000<br>300 | ns | 4.5V ≤ Vcc ≤ 5.5V (E Temp range)<br>1.8V ≤ Vcc ≤ 4.5V<br>4.5V ≤ Vcc ≤ 5.5V |
| SDA and SCL fall time | $T_F$ | — | 300 | ns | **(Note 1)** |
| Start condition hold time | $T_{HD:STA}$ | 4000<br>4000<br>600 | —<br>—<br>— | ns | 4.5V ≤ Vcc ≤ 5.5V (E Temp range)<br>1.8V ≤ Vcc ≤ 4.5V<br>4.5V ≤ Vcc ≤ 5.5V |
| Start condition setup time | $T_{SU:STA}$ | 4700<br>4700<br>600 | —<br>—<br>— | ns | 4.5V ≤ Vcc ≤ 5.5V (E Temp range)<br>1.8V ≤ Vcc ≤ 4.5V<br>4.5V ≤ Vcc ≤ 5.5V |
| Data input hold time | $T_{HD:DAT}$ | 0 | — | ns | **(Note 2)** |
| Data input setup time | $T_{SU:DAT}$ | 250<br>250<br>100 | —<br>—<br>— | ns | 4.5V ≤ Vcc ≤ 5.5V (E Temp range)<br>1.8V ≤ Vcc ≤ 4.5V<br>4.5V ≤ Vcc ≤ 5.5V |
| Stop condition setup time | $T_{SU:STO}$ | 4000<br>4000<br>600 | —<br>—<br>— | ns | 4.5V ≤ Vcc ≤ 5.5V (E Temp range)<br>1.8V ≤ Vcc ≤ 4.5V<br>4.5V ≤ Vcc ≤ 5.5V |
| Output valid from clock **(Note 2)** | $T_{AA}$ | —<br>—<br>— | 3500<br>3500<br>900 | ns | 4.5V ≤ Vcc ≤ 5.5V (E Temp range)<br>1.8V ≤ Vcc ≤ 4.5V<br>4.5V ≤ Vcc ≤ 5.5V |
| Bus free time: Time the bus must be free before a new transmission can start | $T_{BUF}$ | 4700<br>4700<br>1300 | —<br>—<br>— | ns | 4.5V ≤ Vcc ≤ 5.5V (E Temp range)<br>1.8V ≤ Vcc ≤ 4.5V<br>4.5V ≤ Vcc ≤ 5.5V |
| Output fall time from $V_{IH}$ minimum to $V_{IL}$ maximum | $T_{OF}$ | 20+0.1 CB | 250 | ns | **(Note 1)**, CB ≤ 100 pF |
| Input filter spike suppression (SDA and SCL pins) | $T_{SP}$ | — | 50 | ns | **(Notes 1, 3)** |
| Write cycle time | $T_{WC}$ | — | 4 | ms | |
| Endurance | | 1M | — | cycles | **(Note 4)** |

**Note 1:** Not 100% tested. $C_B$ = total capacitance of one bus line in pF.

**2:** As a transmitter, the device must provide an internal minimum delay time to bridge the undefined region (minimum 300 ns) of the falling edge of SCL to avoid unintended generation of Start or Stop conditions.

**3:** The combined $T_{SP}$ and $V_{HYS}$ specifications are due to new Schmitt Trigger inputs which provide improved noise spike suppression. This eliminates the need for a TI specification for standard operation.

**4:** This parameter is not tested but ensured by characterization. For endurance estimates in a specific application, please consult the Total Endurance™ Model which can be obtained at www.microchip.com.



Downloaded from Arrow.com.

## 2.0 PIN DESCRIPTIONS

### Pin Function Table

| Name | PDIP | SOIC | TSSOP | DFN(1) | TDFN(1) | SOT-23 | Description |
|---|---|---|---|---|---|---|---|
| NC | 1, 2, 3 | 1, 2, 3 | 1, 2, 3 | 1, 2, 3 | 1, 2, 3 | — | Not Connected |
| VSS | 4 | 4 | 4 | 4 | 4 | 2 | Ground |
| SDA | 5 | 5 | 5 | 5 | 5 | 3 | Serial Address/Data I/O |
| SCL | 6 | 6 | 6 | 6 | 6 | 1 | Serial Clock |
| WP | 7 | 7 | 7 | 7 | 7 | 5 | Write-Protect Input |
| VCC | 8 | 8 | 8 | 8 | 8 | 4 | +1.8V to 5.5V Power Supply |

**Note 1:** The exposed pad on the DFN/TDFN packages can be connected to VSS or left floating.

### 2.1 SDA Serial Data

This is a bidirectional pin used to transfer addresses and data into and data out of the device. It is an open drain terminal, therefore the SDA bus requires a pull-up resistor to VCC (typical 10 kΩ for 100 kHz, 2 kΩ for 400 kHz).

For normal data transfer SDA is allowed to change only during SCL low. Changes during SCL high are reserved for indicating the Start and Stop conditions.

### 2.2 SCL Serial Clock

This input is used to synchronize the data transfer from and to the device.

### 2.3 Noise Protection

The SCL and SDA inputs have Schmitt Trigger and filter circuits which suppress noise spikes to assure proper device operation even on a noisy bus.


© 1996-2011 Microchip Technology Inc.

Downloaded from Arrow.com.

## 3.0 FUNCTIONAL DESCRIPTION

The 24XX00 supports a bidirectional 2-wire bus and data transmission protocol. A device that sends data onto the bus is defined as a transmitter, and a device receiving data as a receiver. The bus has to be controlled by a master device which generates the Serial Clock (SCL), controls the bus access, and generates the Start and Stop conditions, while the 24XX00 works as slave. Both master and slave can operate as transmitter or receiver, but the master device determines which mode is activated.

## 4.0 BUS CHARACTERISTICS

The following **bus protocol** has been defined:

- Data transfer may be initiated only when the bus is not busy.
- During data transfer, the data line must remain stable whenever the clock line is high. Changes in the data line while the clock line is high will be interpreted as a Start or Stop condition.

Accordingly, the following bus conditions have been defined (Figure 4-1).

### 4.1 Bus Not Busy (A)

Both data and clock lines remain high.

### 4.2 Start Data Transfer (B)

A high-to-low transition of the SDA line while the clock (SCL) is high determines a Start condition. All commands must be preceded by a Start condition.

### 4.3 Stop Data Transfer (C)

A low-to-high transition of the SDA line while the clock (SCL) is high determines a Stop condition. All operations must be ended with a Stop condition.

### 4.4 Data Valid (D)

The state of the data line represents valid data when, after a Start condition, the data line is stable for the duration of the high period of the clock signal.

The data on the line must be changed during the low period of the clock signal. There is one bit of data per clock pulse.

Each data transfer is initiated with a Start condition and terminated with a Stop condition. The number of the data bytes transferred between the Start and Stop conditions is determined by the master device and is theoretically unlimited.

© 1996-2011 Microchip Technology Inc.


Downloaded from Arrow.com.

## 4.5 Acknowledge

Each receiving device, when addressed, is obliged to generate an acknowledge after the reception of each byte. The master device must generate an extra clock pulse which is associated with this Acknowledge bit.

| | |
|---|---|
| **Note:** | The 24XX00 does not generate any Acknowledge bits if an internal programming cycle is in progress. |

The device that acknowledges has to pull down the SDA line during the Acknowledge clock pulse in such a way that the SDA line is stable low during the high period of the acknowledge related clock pulse. Of course, setup and hold times must be taken into account. A master must signal an end of data to the slave by not generating an Acknowledge bit on the last byte that has been clocked out of the slave. In this case, the slave must leave the data line high to enable the master to generate the Stop condition (Figure 4-2).

**FIGURE 4-1: DATA TRANSFER SEQUENCE ON THE SERIAL BUS**

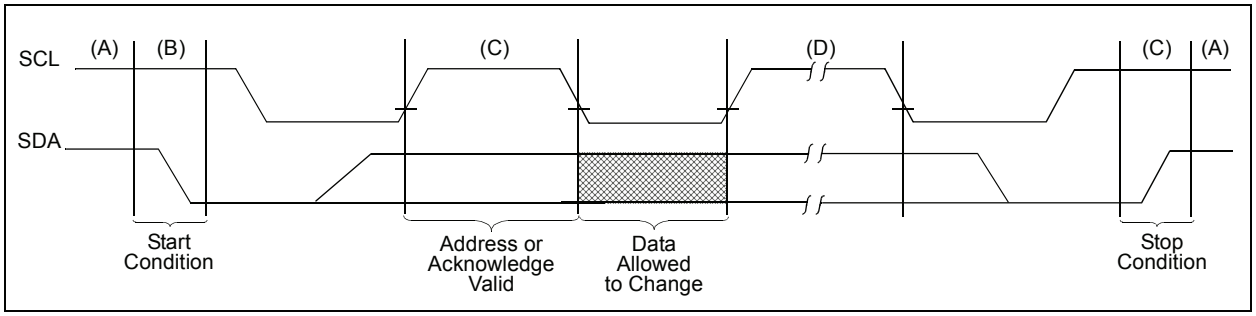


**FIGURE 4-2: ACKNOWLEDGE TIMING**

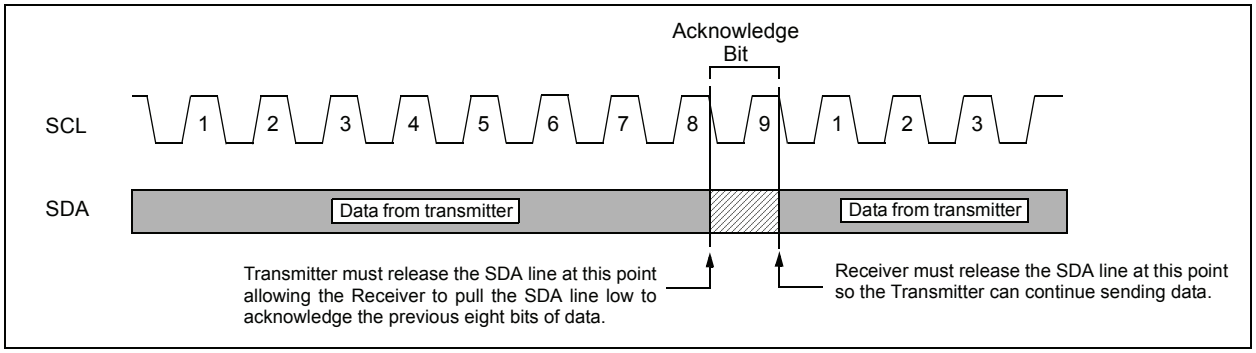



© 1996-2011 Microchip Technology Inc.

Downloaded from Arrow.com.

## 5.0 DEVICE ADDRESSING

After generating a Start condition, the bus master transmits a control byte consisting of a slave address and a Read/$\overline{\text{Write}}$ bit that indicates what type of operation is to be performed. The slave address for the 24XX00 consists of a 4-bit device code '1010' followed by three "don't care" bits.

The last bit of the control byte determines the operation to be performed. When set to a one a read operation is selected, and when set to a zero a write operation is selected (Figure 5-1). The 24XX00 monitors the bus for its corresponding slave address all the time. It generates an Acknowledge bit if the slave address was true and it is not in a programming mode.

**FIGURE 5-1: CONTROL BYTE FORMAT**

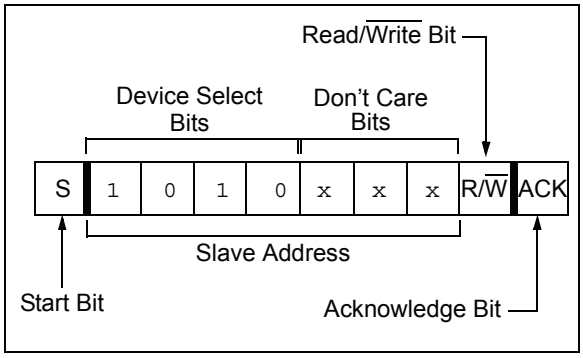




Downloaded from Arrow.com.

## 6.0 WRITE OPERATIONS

### 6.1 Byte Write

Following the Start signal from the master, the device code (4 bits), the “don’t care” bits (3 bits), and the R/$\overline{W}$ bit (which is a logic low) are placed onto the bus by the master transmitter. This indicates to the addressed slave receiver that a byte with a word address will follow after it has generated an Acknowledge bit during the ninth clock cycle. Therefore, the next byte transmitted by the master is the word address and will be written into the Address Pointer of the 24XX00. Only the lower four address bits are used by the device, and the upper four bits are “don’t cares.” The 24XX00 will acknowledge the address byte and the master device will then transmit the data word to be written into the addressed memory location. The 24XX00 acknowledges again and the master generates a Stop condition. This initiates the internal write cycle, and during this time the 24XX00 will not generate Acknowledge signals (Figure 6-1). After a byte Write command, the internal address counter will not be incremented and will point to the same address location that was just written. If a Stop bit is transmitted to the device at any point in the Write command sequence before the entire sequence is complete, then the command will abort and no data will be written. If more than 8 data bits are transmitted before the Stop bit is sent, then the device will clear the previously loaded byte and begin loading the data buffer again. If more than one data byte is transmitted to the device and a Stop bit is sent before a full eight data bits have been transmitted, then the Write command will abort and no data will be written. The 24XX00 employs a $V_{CC}$ threshold detector circuit which disables the internal erase/write logic if the $V_{CC}$ is below 1.5V (24AA00 and 24LC00) or 3.8V (24C00) at nominal conditions.

**FIGURE 6-1: BYTE WRITE**

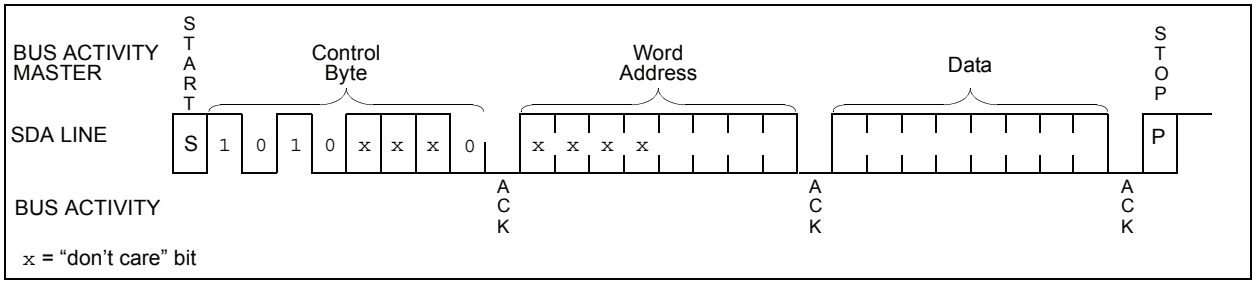



© 1996-2011 Microchip Technology Inc.

Downloaded from Arrow.com.

## 7.0 ACKNOWLEDGE POLLING

Since the device will not acknowledge during a write cycle, this can be used to determine when the cycle is complete (this feature can be used to maximize bus throughput). Once the Stop condition for a Write command has been issued from the master, the device initiates the internally timed write cycle. ACK polling can be initiated immediately. This involves the master sending a Start condition followed by the control byte for a Write command (R/$\overline{W}$ = 0). If the device is still busy with the write cycle, then no ACK will be returned. If no ACK is returned, then the Start bit and control byte must be re-sent. If the cycle is complete, then the device will return the ACK and the master can then proceed with the next Read or Write command. See Figure 7-1 for flow diagram.

**FIGURE 7-1: ACKNOWLEDGE POLLING FLOW**

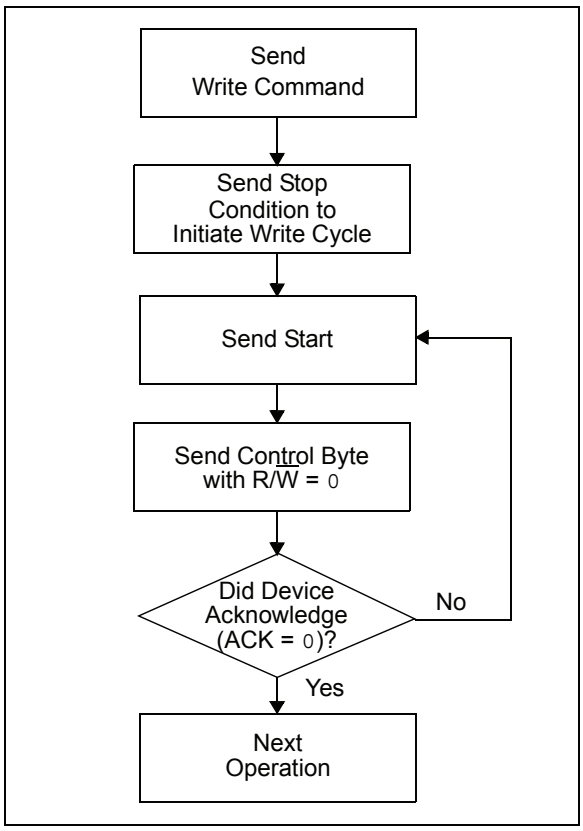




Downloaded from Arrow.com.

## 8.0 READ OPERATIONS

Read operations are initiated in the same way as write operations with the exception that the R/$\overline{W}$ bit of the slave address is set to one. There are three basic types of read operations: current address read, random read and sequential read.

### 8.1 Current Address Read

The 24XX00 contains an address counter that maintains the address of the last word accessed, internally incremented by one. Therefore, if the previous read access was to address n, the next current address read operation would access data from address n + 1. Upon receipt of the slave address with the R/$\overline{W}$ bit set to one, the device issues an acknowledge and transmits the eight-bit data word. The master will not acknowledge the transfer, but does generate a Stop condition and the device discontinues transmission (Figure 8-1).

### 8.2 Random Read

Random read operations allow the master to access any memory location in a random manner. To perform this type of read operation, first the word address must be set. This is done by sending the word address to the device as part of a write operation.

After the word address is sent, the master generates a Start condition following the acknowledge. This terminates the write operation, but not before the internal Address Pointer is set. Then the master issues the control byte again, but with the R/$\overline{W}$ bit set to a one. The 24XX00 will then issue an acknowledge and transmits the eight bit data word. The master will not acknowledge the transfer, but does generate a Stop condition and the device discontinues transmission (Figure 8-2). After this command, the internal address counter will point to the address location following the one that was just read.

### 8.3 Sequential Read

Sequential reads are initiated in the same way as a random read except that after the device transmits the first data byte, the master issues an acknowledge as opposed to a Stop condition in a random read. This directs the device to transmit the next sequentially addressed 8-bit word (Figure 8-3).

To provide sequential reads the 24XX00 contains an internal Address Pointer which is incremented by one at the completion of each read operation. This Address Pointer allows the entire memory contents to be serially read during one operation.

**FIGURE 8-1: CURRENT ADDRESS READ**

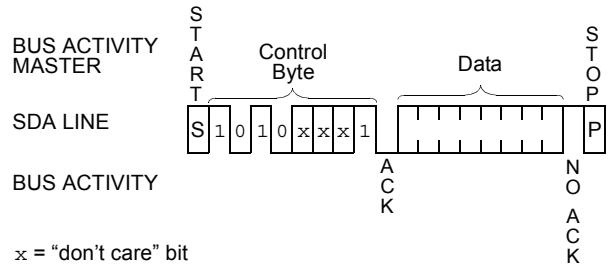



© 1996-2011 Microchip Technology Inc.

Downloaded from Arrow.com.

**FIGURE 8-2: RANDOM READ**

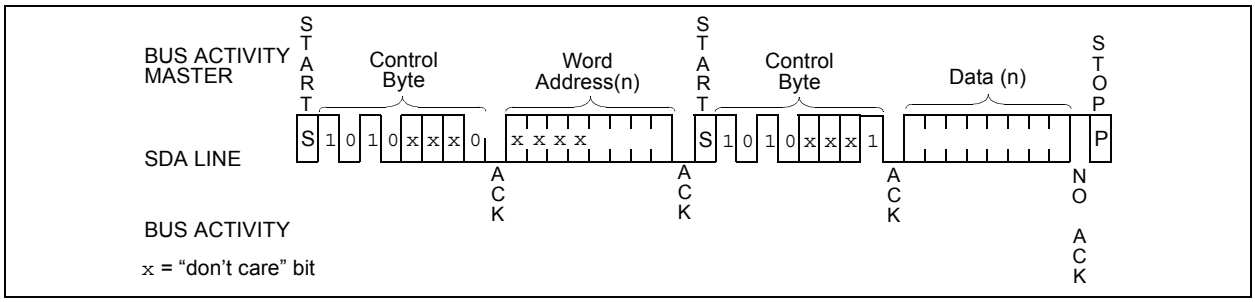


**FIGURE 8-3: SEQUENTIAL READ**

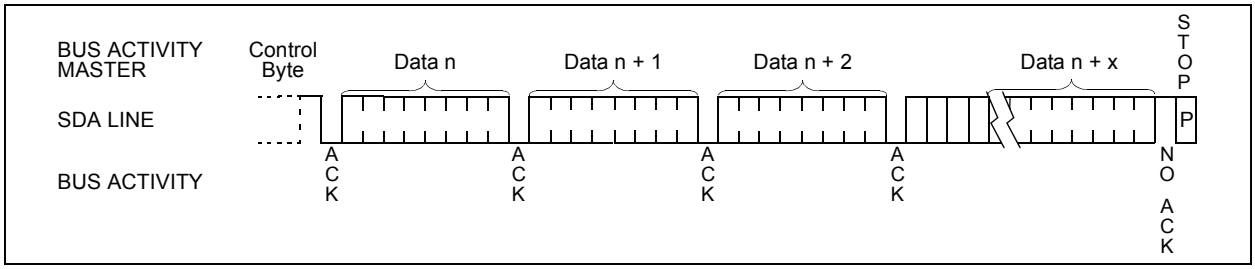




Downloaded from Arrow.com.

## 9.0 PACKAGING INFORMATION

### 9.1 Package Marking Information

8-Lead PDIP (300 mil)

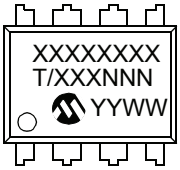


Example:

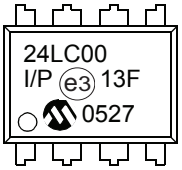


8-Lead SOIC (3.90 mm)

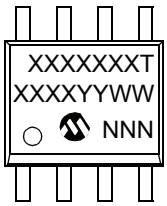


Example:

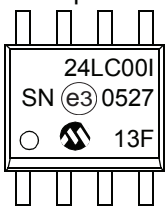


8-Lead TSSOP

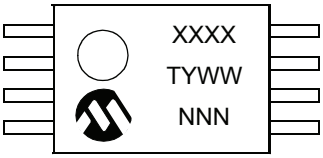


Example:

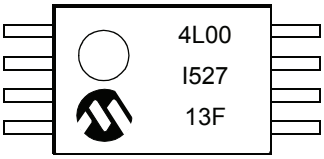


8-Lead 2x3 DFN

Example:

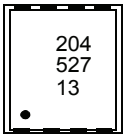


8-Lead 2x3 TDFN

Example:

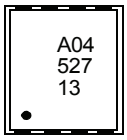


5-Lead SOT-23

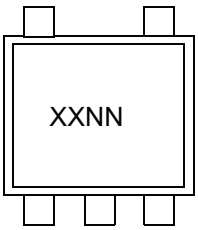


Example:

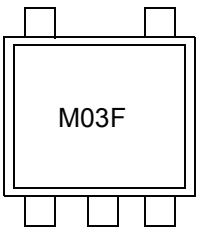



© 1996-2011 Microchip Technology Inc.

Downloaded from Arrow.com.

| Part Number | 1st Line Marking Codes | | | | | | |
|---|---|---|---|---|---|---|---|
| | TSSOP | SOT-23 | | DFN | | TDFN | |
| | | I Temp. | E Temp. | I Temp. | E Temp. | I Temp. | E Temp. |
| 24AA00 | 4A00 | B0NN | — | 201 | — | A01 | — |
| 24LC00 | 4L00 | M0NN | — | 204 | — | A04 | — |
| 24C00 | 4C00 | D0NN | E0NN | 207 | — | A07 | A08 |

**Note:** NN = Alphanumeric traceability code

**Legend:**

| | |
|---|---|
| XX...X | Part number or part number code |
| T | Temperature (I, E) |
| Y | Year code (last digit of calendar year) |
| YY | Year code (last 2 digits of calendar year) |
| WW | Week code (week of January 1 is week ‘01’) |
| NNN | Alphanumeric traceability code (2 characters for small packages) |
| e3 | Pb-free JEDEC designator for Matte Tin (Sn) |

**Note**: For very small packages with no room for the Pb-free JEDEC designator e3 , the marking will only appear on the outer carton or reel label.

**Note**: In the event the full Microchip part number cannot be marked on one line, it will be carried over to the next line, thus limiting the number of available characters for customer-specific information.

**Note:** Please visit www.microchip.com/Pbfree for the latest information on Pb-free conversion.

*Standard OTP marking consists of Microchip part number, year code, week code, and traceability code.



Downloaded from Arrow.com.

## 8-Lead Plastic Dual In-Line (P) – 300 mil Body [PDIP]

**Note:** For the most current package drawings, please see the Microchip Packaging Specification located at http://www.microchip.com/packaging

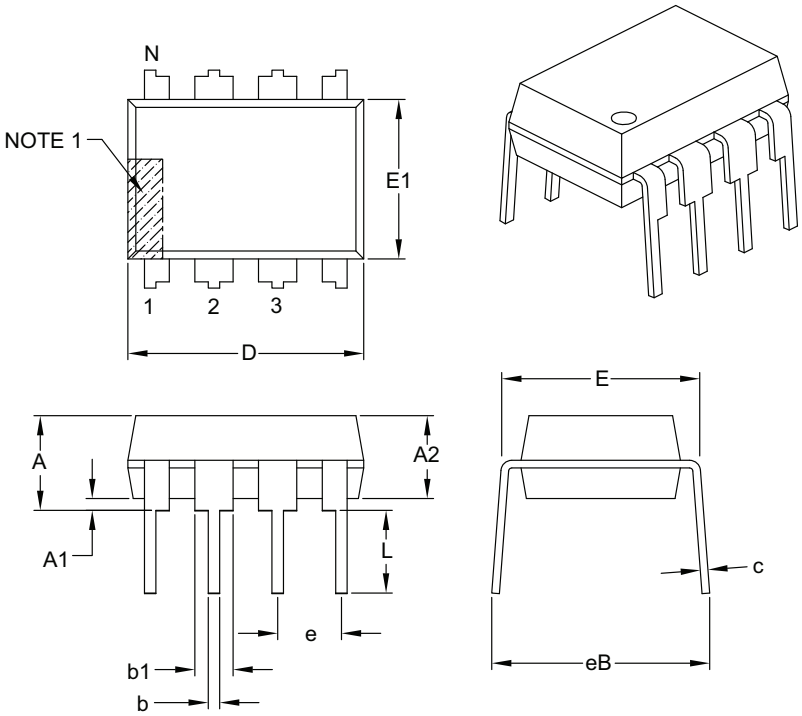


| Units | | INCHES | | |
|---|---|---|---|---|
| Dimension Limits | | MIN | NOM | MAX |
| Number of Pins | N | 8 | | |
| Pitch | e | .100 BSC | | |
| Top to Seating Plane | A | – | – | .210 |
| Molded Package Thickness | A2 | .115 | .130 | .195 |
| Base to Seating Plane | A1 | .015 | – | – |
| Shoulder to Shoulder Width | E | .290 | .310 | .325 |
| Molded Package Width | E1 | .240 | .250 | .280 |
| Overall Length | D | .348 | .365 | .400 |
| Tip to Seating Plane | L | .115 | .130 | .150 |
| Lead Thickness | c | .008 | .010 | .015 |
| Upper Lead Width | b1 | .040 | .060 | .070 |
| Lower Lead Width | b | .014 | .018 | .022 |
| Overall Row Spacing § | eB | – | – | .430 |

**Notes:**

1. Pin 1 visual index feature may vary, but must be located with the hatched area.
2. § Significant Characteristic.
3. Dimensions D and E1 do not include mold flash or protrusions. Mold flash or protrusions shall not exceed .010" per side.
4. Dimensioning and tolerancing per ASME Y14.5M.
   BSC: Basic Dimension. Theoretically exact value shown without tolerances.

Microchip Technology Drawing C04-018B


© 1996-2011 Microchip Technology Inc.

Downloaded from Arrow.com.

### 8-Lead Plastic Small Outline (SN) - Narrow, 3.90 mm Body [SOIC]

**Note:** For the most current package drawings, please see the Microchip Packaging Specification located at http://www.microchip.com/packaging

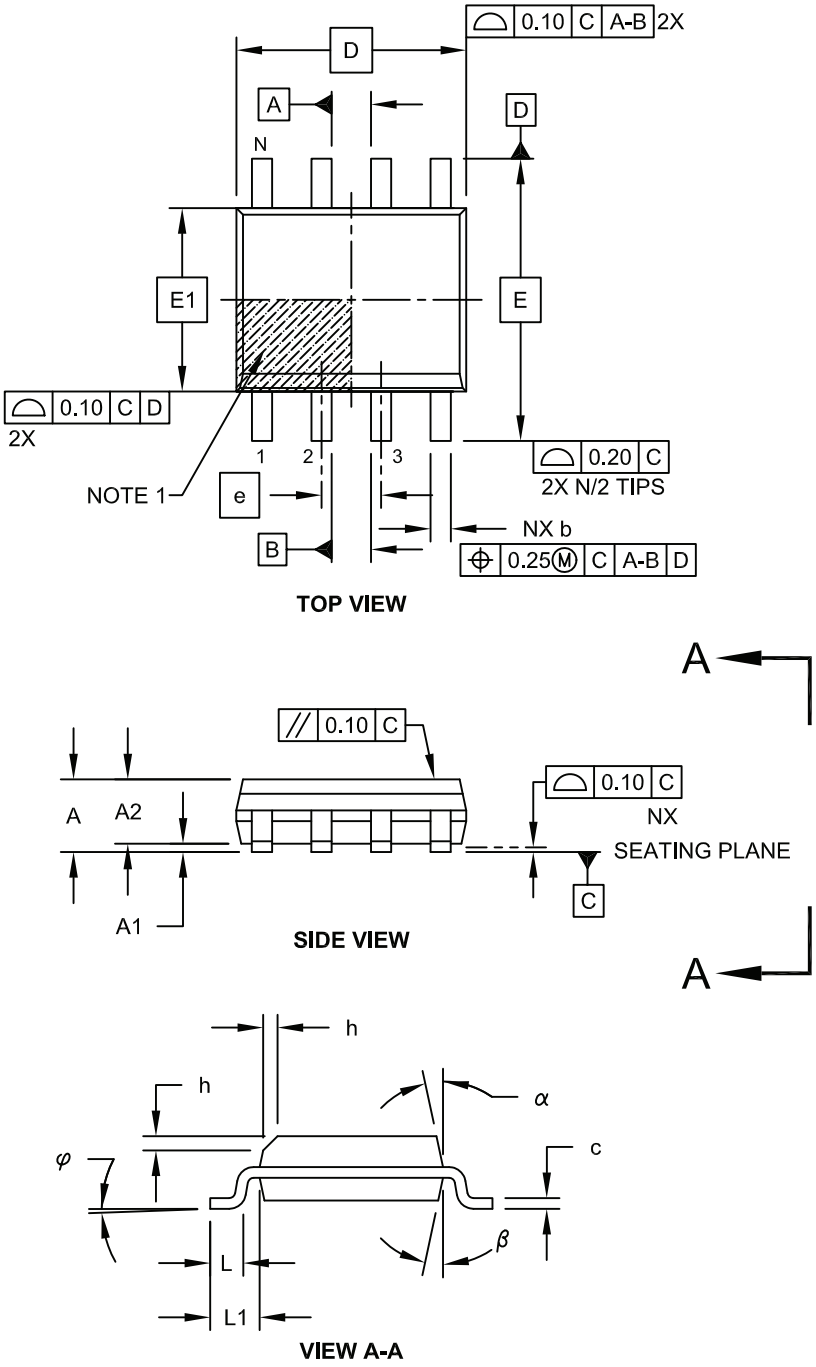


Microchip Technology Drawing No. C04-057C Sheet 1 of 2



Downloaded from Arrow.com.

## 8-Lead Plastic Small Outline (SN) - Narrow, 3.90 mm Body [SOIC]

**Note:** For the most current package drawings, please see the Microchip Packaging Specification located at http://www.microchip.com/packaging

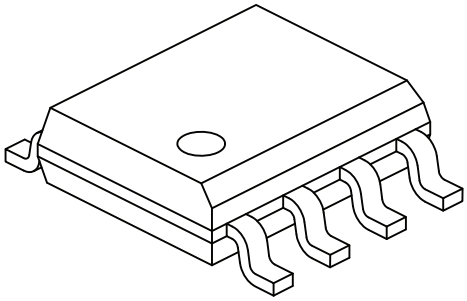

| Units | | MILLIMETERS | | |
|---|---|---|---|---|
| Dimension Limits | | MIN | NOM | MAX |
| Number of Pins | N | 8 | | |
| Pitch | e | 1.27 BSC | | |
| Overall Height | A | - | - | 1.75 |
| Molded Package Thickness | A2 | 1.25 | - | - |
| Standoff § | A1 | 0.10 | - | 0.25 |
| Overall Width | E | 6.00 BSC | | |
| Molded Package Width | E1 | 3.90 BSC | | |
| Overall Length | D | 4.90 BSC | | |
| Chamfer (Optional) | h | 0.25 | - | 0.50 |
| Foot Length | L | 0.40 | - | 1.27 |
| Footprint | L1 | 1.04 REF | | |
| Foot Angle | $\varphi$ | 0° | - | 8° |
| Lead Thickness | c | 0.17 | - | 0.25 |
| Lead Width | b | 0.31 | - | 0.51 |
| Mold Draft Angle Top | $\alpha$ | 5° | - | 15° |
| Mold Draft Angle Bottom | $\beta$ | 5° | - | 15° |

**Notes:**

1. Pin 1 visual index feature may vary, but must be located within the hatched area.
2. § Significant Characteristic
3. Dimensions D and E1 do not include mold flash or protrusions. Mold flash or protrusions shall not exceed 0.15mm per side.
4. Dimensioning and tolerancing per ASME Y14.5M

   BSC: Basic Dimension. Theoretically exact value shown without tolerances.

   REF: Reference Dimension, usually without tolerance, for information purposes only.

Microchip Technology Drawing No. C04-057C Sheet 2 of 2


© 1996-2011 Microchip Technology Inc.

Downloaded from Arrow.com.

## 8-Lead Plastic Small Outline (SN) – Narrow, 3.90 mm Body [SOIC]

**Note:** For the most current package drawings, please see the Microchip Packaging Specification located at http://www.microchip.com/packaging

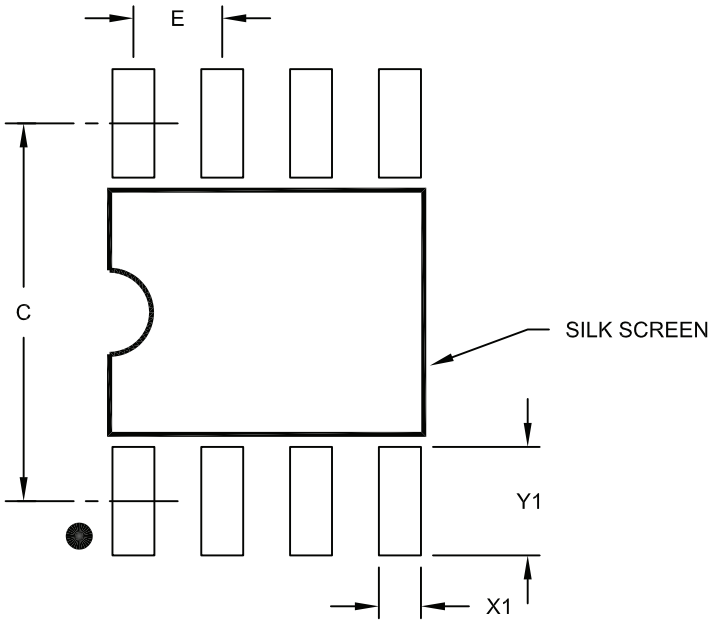


RECOMMENDED LAND PATTERN

| Units | | MILLIMETERS | | |
|---|---|---|---|---|
| Dimension Limits | | MIN | NOM | MAX |
| Contact Pitch | E | 1.27 BSC | | |
| Contact Pad Spacing | C | | 5.40 | |
| Contact Pad Width (X8) | X1 | | | 0.60 |
| Contact Pad Length (X8) | Y1 | | | 1.55 |

Notes:

1. Dimensioning and tolerancing per ASME Y14.5M
   BSC: Basic Dimension. Theoretically exact value shown without tolerances.

Microchip Technology Drawing No. C04-2057A



Downloaded from Arrow.com.

## 8-Lead Plastic Thin Shrink Small Outline (ST) – 4.4 mm Body [TSSOP]

**Note:** For the most current package drawings, please see the Microchip Packaging Specification located at http://www.microchip.com/packaging

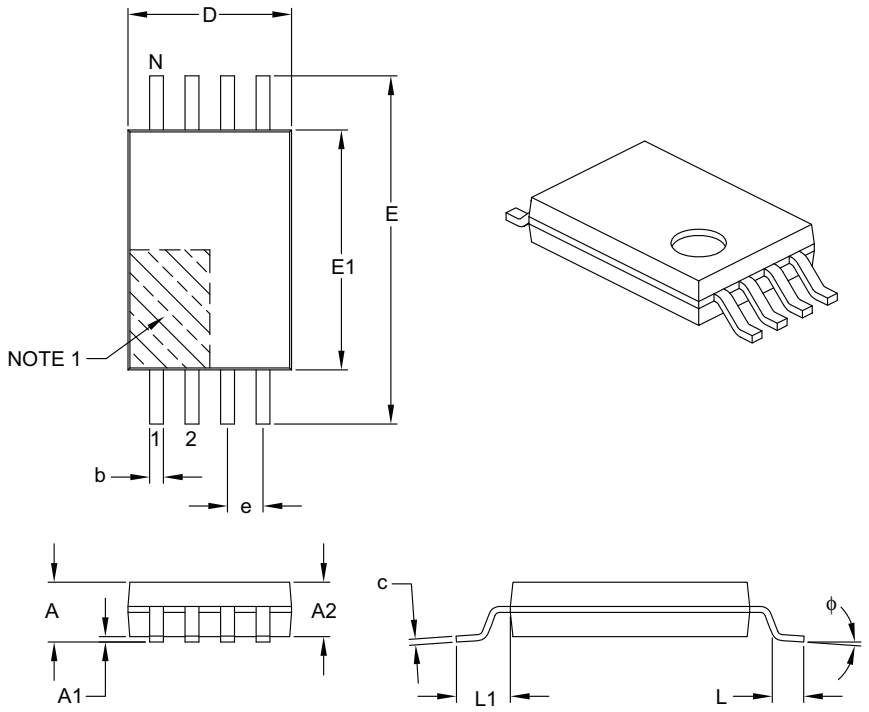


| Units | | MILLIMETERS | | |
|---|---|---|---|---|
| Dimension Limits | | MIN | NOM | MAX |
| Number of Pins | N | 8 | | |
| Pitch | e | 0.65 BSC | | |
| Overall Height | A | – | – | 1.20 |
| Molded Package Thickness | A2 | 0.80 | 1.00 | 1.05 |
| Standoff | A1 | 0.05 | – | 0.15 |
| Overall Width | E | 6.40 BSC | | |
| Molded Package Width | E1 | 4.30 | 4.40 | 4.50 |
| Molded Package Length | D | 2.90 | 3.00 | 3.10 |
| Foot Length | L | 0.45 | 0.60 | 0.75 |
| Footprint | L1 | 1.00 REF | | |
| Foot Angle | ϕ | 0° | – | 8° |
| Lead Thickness | c | 0.09 | – | 0.20 |
| Lead Width | b | 0.19 | – | 0.30 |

**Notes:**

1. Pin 1 visual index feature may vary, but must be located within the hatched area.
2. Dimensions D and E1 do not include mold flash or protrusions. Mold flash or protrusions shall not exceed 0.15 mm per side.
3. Dimensioning and tolerancing per ASME Y14.5M.
   BSC: Basic Dimension. Theoretically exact value shown without tolerances.
   REF: Reference Dimension, usually without tolerance, for information purposes only.

Microchip Technology Drawing C04-086B


© 1996-2011 Microchip Technology Inc.

Downloaded from Arrow.com.

8-Lead Plastic Thin Shrink Small Outline (ST) - 4.4 mm Body [TSSOP]

**Note:** For the most current package drawings, please see the Microchip Packaging Specification located at http://www.microchip.com/packaging

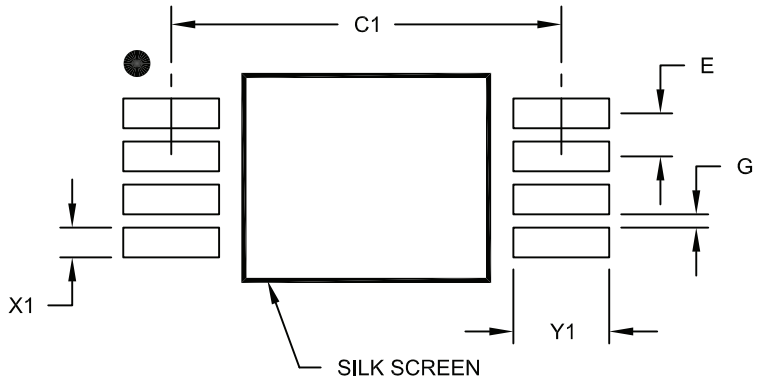


RECOMMENDED LAND PATTERN

| Units | | MILLIMETERS | | |
|---|---|---|---|---|
| Dimension Limits | | MIN | NOM | MAX |
| Contact Pitch | E | | 0.65 BSC | |
| Contact Pad Spacing | C1 | | 5.90 | |
| Contact Pad Width (X8) | X1 | | | 0.45 |
| Contact Pad Length (X8) | Y1 | | | 1.45 |
| Distance Between Pads | G | 0.20 | | |

Notes:

1. Dimensioning and tolerancing per ASME Y14.5M
   BSC: Basic Dimension. Theoretically exact value shown without tolerances.

Microchip Technology Drawing No. C04-2086A



Downloaded from Arrow.com.

## 8-Lead Plastic Dual Flat, No Lead Package (MC) – 2x3x0.9 mm Body [DFN]

**Note:** For the most current package drawings, please see the Microchip Packaging Specification located at http://www.microchip.com/packaging

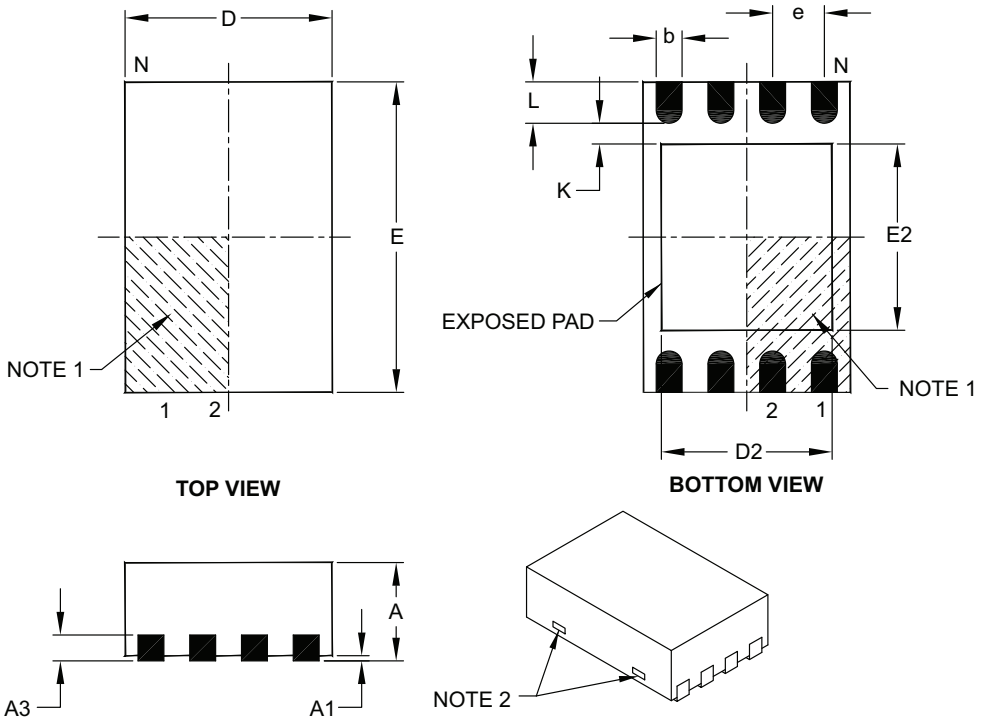


| Units | | MILLIMETERS | | |
|---|---|---|---|---|
| Dimension Limits | | MIN | NOM | MAX |
| Number of Pins | N | 8 | | |
| Pitch | e | 0.50 BSC | | |
| Overall Height | A | 0.80 | 0.90 | 1.00 |
| Standoff | A1 | 0.00 | 0.02 | 0.05 |
| Contact Thickness | A3 | 0.20 REF | | |
| Overall Length | D | 2.00 BSC | | |
| Overall Width | E | 3.00 BSC | | |
| Exposed Pad Length | D2 | 1.30 | – | 1.55 |
| Exposed Pad Width | E2 | 1.50 | – | 1.75 |
| Contact Width | b | 0.20 | 0.25 | 0.30 |
| Contact Length | L | 0.30 | 0.40 | 0.50 |
| Contact-to-Exposed Pad | K | 0.20 | – | – |

**Notes:**

1. Pin 1 visual index feature may vary, but must be located within the hatched area.
2. Package may have one or more exposed tie bars at ends.
3. Package is saw singulated.
4. Dimensioning and tolerancing per ASME Y14.5M.

   BSC: Basic Dimension. Theoretically exact value shown without tolerances.

   REF: Reference Dimension, usually without tolerance, for information purposes only.

Microchip Technology Drawing C04-123C


© 1996-2011 Microchip Technology Inc.

Downloaded from Arrow.com.

8-Lead Plastic Dual Flat, No Lead Package (MC) - 2x3x0.9mm Body [DFN]

**Note:** For the most current package drawings, please see the Microchip Packaging Specification located at http://www.microchip.com/packaging

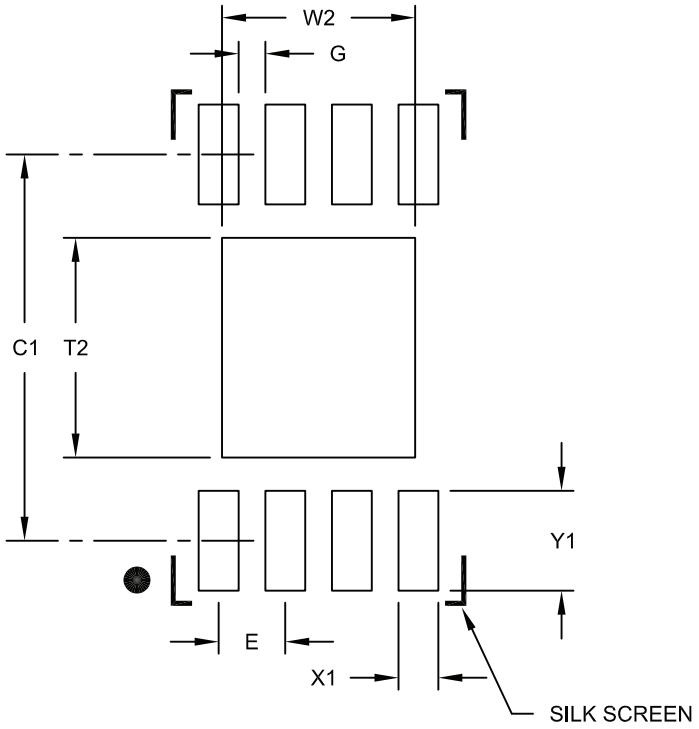


RECOMMENDED LAND PATTERN

| Units | | MILLIMETERS | | |
|---|---|---|---|---|
| Dimension Limits | | MIN | NOM | MAX |
| Contact Pitch | E | | 0.50 BSC | |
| Optional Center Pad Width | W2 | | | 1.45 |
| Optional Center Pad Length | T2 | | | 1.75 |
| Contact Pad Spacing | C1 | | 2.90 | |
| Contact Pad Width (X8) | X1 | | | 0.30 |
| Contact Pad Length (X8) | Y1 | | | 0.75 |
| Distance Between Pads | G | 0.20 | | |

Notes:

1. Dimensioning and tolerancing per ASME Y14.5M
   BSC: Basic Dimension. Theoretically exact value shown without tolerances.

Microchip Technology Drawing No. C04-2123B



Downloaded from Arrow.com.

## 8-Lead Plastic Dual Flat, No Lead Package (MN) – 2x3x0.75mm Body [TDFN]

**Note:** For the most current package drawings, please see the Microchip Packaging Specification located at http://www.microchip.com/packaging

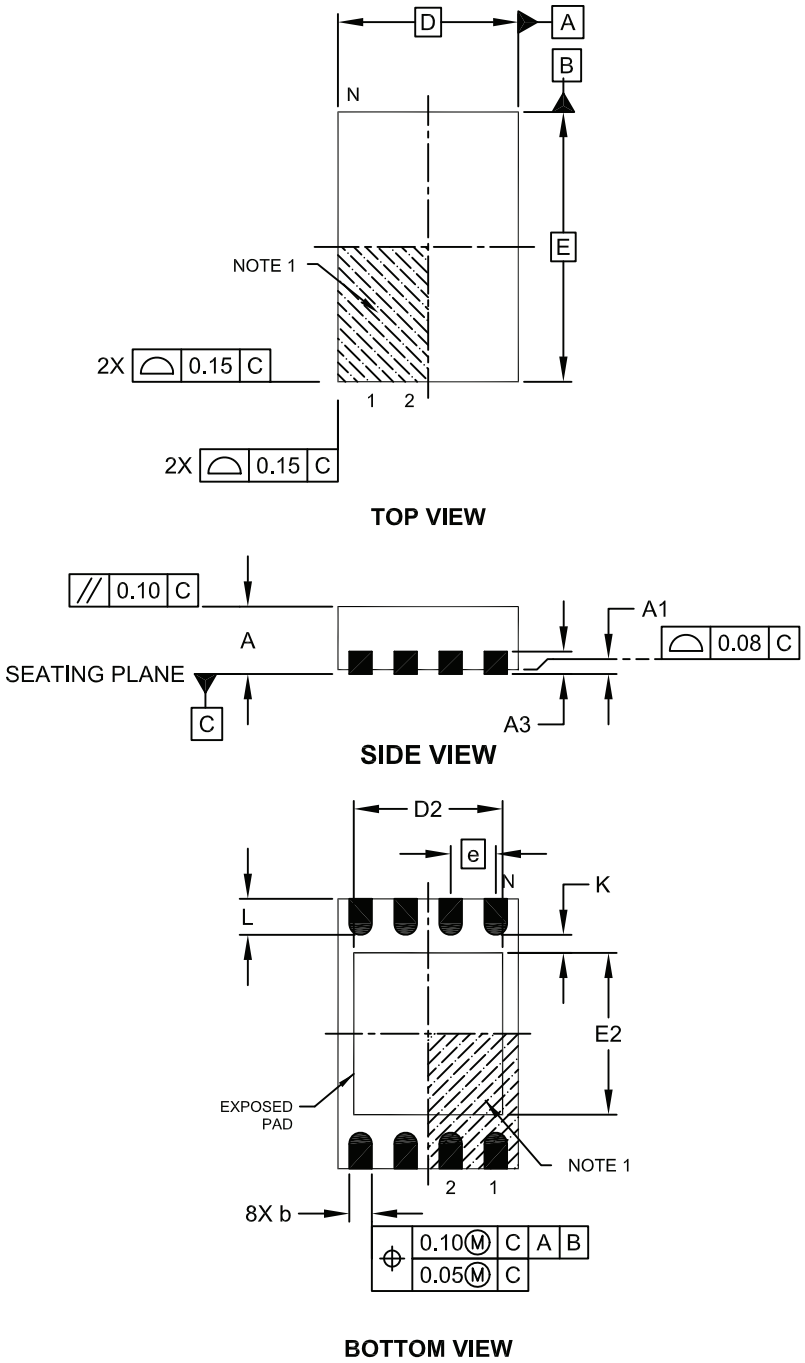


Microchip Technology Drawing No. C04-129C Sheet 1 of 2


© 1996-2011 Microchip Technology Inc.

Downloaded from Arrow.com.

## 8-Lead Plastic Dual Flat, No Lead Package (MN) – 2x3x0.75mm Body [TDFN]

**Note:** For the most current package drawings, please see the Microchip Packaging Specification located at http://www.microchip.com/packaging

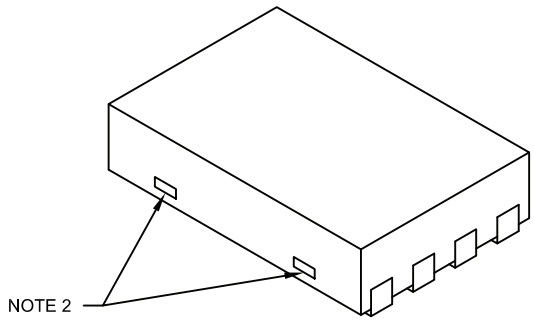


| Units | | MILLIMETERS | | |
|---|---|---|---|---|
| Dimension Limits | | MIN | NOM | MAX |
| Number of Pins | N | 8 | | |
| Pitch | e | 0.50 BSC | | |
| Overall Height | A | 0.70 | 0.75 | 0.80 |
| Standoff | A1 | 0.00 | 0.02 | 0.05 |
| Contact Thickness | A3 | 0.20 REF | | |
| Overall Length | D | 2.00 BSC | | |
| Overall Width | E | 3.00 BSC | | |
| Exposed Pad Length | D2 | 1.20 | - | 1.60 |
| Exposed Pad Width | E2 | 1.20 | - | 1.60 |
| Contact Width | b | 0.20 | 0.25 | 0.30 |
| Contact Length | L | 0.25 | 0.30 | 0.45 |
| Contact-to-Exposed Pad | K | 0.20 | - | - |

**Notes:**

1. Pin 1 visual index feature may vary, but must be located within the hatched area.
2. Package may have one or more exposed tie bars at ends.
3. Package is saw singulated
4. Dimensioning and tolerancing per ASME Y14.5M

   BSC: Basic Dimension. Theoretically exact value shown without tolerances.

   REF: Reference Dimension, usually without tolerance, for information purposes only.

Microchip Technology Drawing No. C04-129C Sheet 2 of 2



Downloaded from Arrow.com.

## 8-Lead Plastic Dual Flat, No Lead Package (MN) – 2x3x0.75 mm Body [TDFN]

**Note:** For the most current package drawings, please see the Microchip Packaging Specification located at http://www.microchip.com/packaging

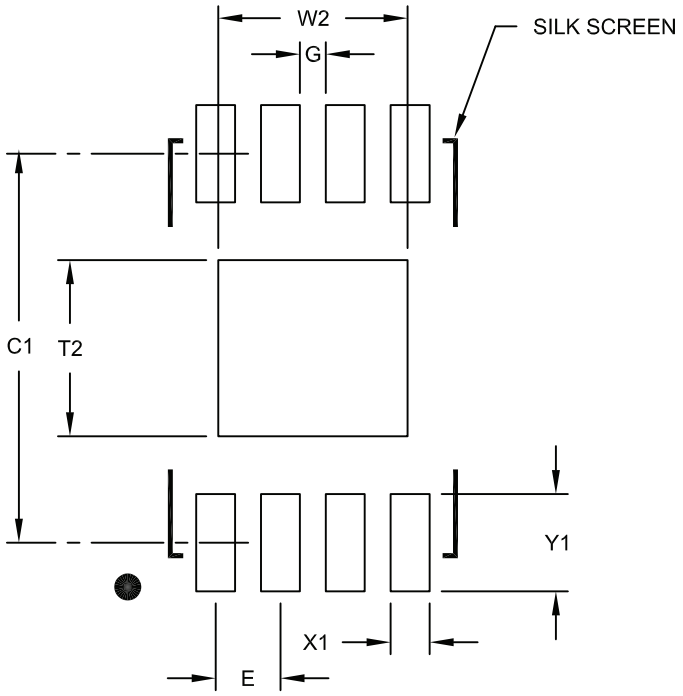


RECOMMENDED LAND PATTERN

| Units | | MILLIMETERS | | |
|---|---|---|---|---|
| Dimension Limits | | MIN | NOM | MAX |
| Contact Pitch | E | | 0.50 BSC | |
| Optional Center Pad Width | W2 | | | 1.46 |
| Optional Center Pad Length | T2 | | | 1.36 |
| Contact Pad Spacing | C1 | | 3.00 | |
| Contact Pad Width (X8) | X1 | | | 0.30 |
| Contact Pad Length (X8) | Y1 | | | 0.75 |
| Distance Between Pads | G | 0.20 | | |

Notes:

1. Dimensioning and tolerancing per ASME Y14.5M
   BSC: Basic Dimension. Theoretically exact value shown without tolerances.

Microchip Technology Drawing No. C04-2129A


© 1996-2011 Microchip Technology Inc.

Downloaded from Arrow.com.

## 5-Lead Plastic Small Outline Transistor (OT) [SOT-23]

**Note:** For the most current package drawings, please see the Microchip Packaging Specification located at http://www.microchip.com/packaging

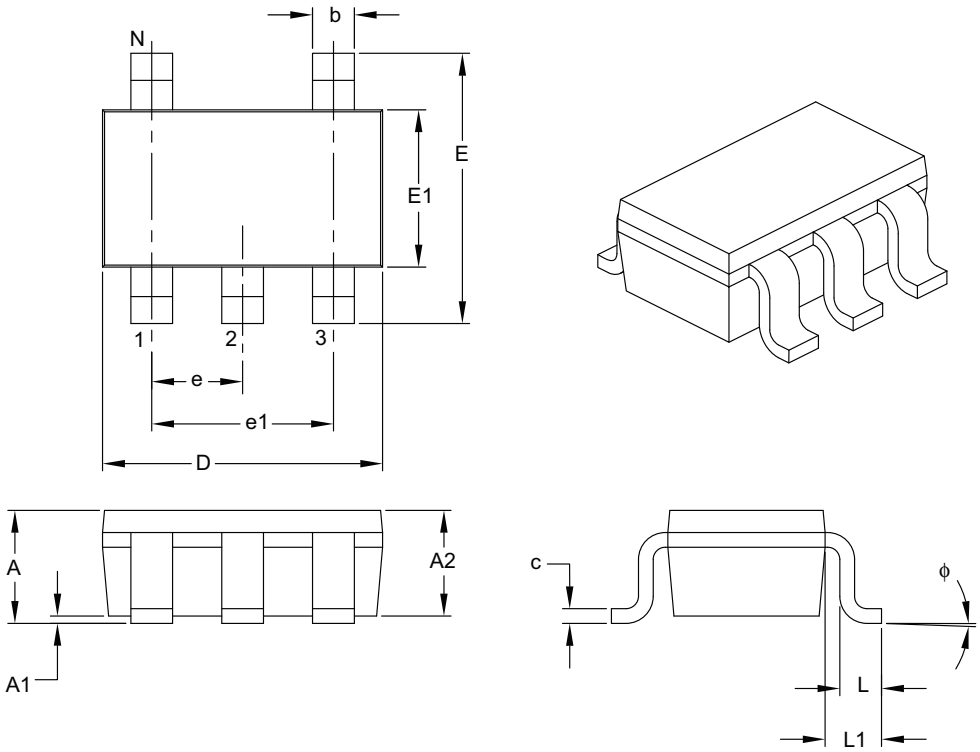


| Units | | MILLIMETERS | | |
|---|---|---|---|---|
| Dimension Limits | | MIN | NOM | MAX |
| Number of Pins | N | 5 | | |
| Lead Pitch | e | 0.95 BSC | | |
| Outside Lead Pitch | e1 | 1.90 BSC | | |
| Overall Height | A | 0.90 | – | 1.45 |
| Molded Package Thickness | A2 | 0.89 | – | 1.30 |
| Standoff | A1 | 0.00 | – | 0.15 |
| Overall Width | E | 2.20 | – | 3.20 |
| Molded Package Width | E1 | 1.30 | – | 1.80 |
| Overall Length | D | 2.70 | – | 3.10 |
| Foot Length | L | 0.10 | – | 0.60 |
| Footprint | L1 | 0.35 | – | 0.80 |
| Foot Angle | ϕ | 0° | – | 30° |
| Lead Thickness | c | 0.08 | – | 0.26 |
| Lead Width | b | 0.20 | – | 0.51 |

**Notes:**

1. Dimensions D and E1 do not include mold flash or protrusions. Mold flash or protrusions shall not exceed 0.127 mm per side.
2. Dimensioning and tolerancing per ASME Y14.5M.

   BSC: Basic Dimension. Theoretically exact value shown without tolerances.

Microchip Technology Drawing C04-091B



Downloaded from Arrow.com.

### 5-Lead Plastic Small Outline Transistor (OT) [SOT-23]

**Note:** For the most current package drawings, please see the Microchip Packaging Specification located at http://www.microchip.com/packaging

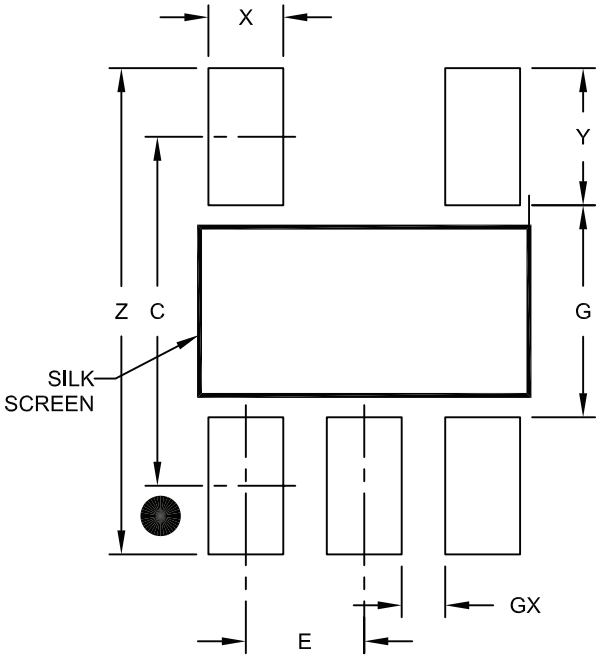


RECOMMENDED LAND PATTERN

| Units | | MILLIMETERS | | |
|---|---|---|---|---|
| Dimension Limits | | MIN | NOM | MAX |
| Contact Pitch | E | | 0.95 BSC | |
| Contact Pad Spacing | C | | 2.80 | |
| Contact Pad Width (X5) | X | | | 0.60 |
| Contact Pad Length (X5) | Y | | | 1.10 |
| Distance Between Pads | G | 1.70 | | |
| Distance Between Pads | GX | 0.35 | | |
| Overall Width | Z | | | 3.90 |

Notes:

1. Dimensioning and tolerancing per ASME Y14.5M
   BSC: Basic Dimension. Theoretically exact value shown without tolerances.

Microchip Technology Drawing No. C04-2091A


© 1996-2011 Microchip Technology Inc.

Downloaded from Arrow.com.

# APPENDIX A: REVISION HISTORY

## Revision E

Added DFN package.

## Revision F (02/2007)

Revised Device Selection Table; Features Section; Changed 1.8V to 1.7V; Revised Tables 1-1, 1-2; Revised Product ID System; Replaced Package Drawings; Replaced On-line Support page.

## Revision G (03/2007)

Replaced Package Drawings (Rev. AM).

## Revision H (11/2011)

Added TDFN Package.



Downloaded from Arrow.com.

**NOTES:**


© 1996-2011 Microchip Technology Inc.

Downloaded from Arrow.com.

## THE MICROCHIP WEB SITE

Microchip provides online support via our WWW site at www.microchip.com. This web site is used as a means to make files and information easily available to customers. Accessible by using your favorite Internet browser, the web site contains the following information:

- **Product Support** – Data sheets and errata, application notes and sample programs, design resources, user's guides and hardware support documents, latest software releases and archived software
- **General Technical Support** – Frequently Asked Questions (FAQ), technical support requests, online discussion groups, Microchip consultant program member listing
- **Business of Microchip** – Product selector and ordering guides, latest Microchip press releases, listing of seminars and events, listings of Microchip sales offices, distributors and factory representatives

## CUSTOMER CHANGE NOTIFICATION SERVICE

Microchip's customer notification service helps keep customers current on Microchip products. Subscribers will receive e-mail notification whenever there are changes, updates, revisions or errata related to a specified product family or development tool of interest.

To register, access the Microchip web site at www.microchip.com. Under "Support", click on "Customer Change Notification" and follow the registration instructions.

## CUSTOMER SUPPORT

Users of Microchip products can receive assistance through several channels:

- Distributor or Representative
- Local Sales Office
- Field Application Engineer (FAE)
- Technical Support
- Development Systems Information Line

Customers should contact their distributor, representative or field application engineer (FAE) for support. Local sales offices are also available to help customers. A listing of sales offices and locations is included in the back of this document.

**Technical support is available through the web site at: http://microchip.com/support**



Downloaded from Arrow.com.

## READER RESPONSE

It is our intention to provide you with the best documentation possible to ensure successful use of your Microchip product. If you wish to provide your comments on organization, clarity, subject matter, and ways in which our documentation can better serve you, please FAX your comments to the Technical Publications Manager at (480) 792-4150.

Please list the following information, and use this outline to provide us with your comments about this document.

TO: Technical Publications Manager

RE: Reader Response

Total Pages Sent _____

From: Name _____

Company _____

Address _____

City / State / ZIP / Country _____

Telephone: (_____) _____ - _____ FAX: (_____) _____ - _____

Application (optional):

Would you like a reply? ___Y ___N

Device: 24AA00/24LC00/24C00 Literature Number: DS21178H

Questions:

1. What are the best features of this document?

_____

_____

2. How does this document meet your hardware and software development needs?

_____

_____

3. Do you find the organization of this document easy to follow? If not, why?

_____

_____

4. What additions to the document do you think would enhance the structure and subject?

_____

_____

5. What deletions from the document could be made without affecting the overall usefulness?

_____

_____

6. Is there any incorrect or misleading information (what and where)?

_____

_____

7. How would you improve this document?

_____

_____


© 1996-2011 Microchip Technology Inc.

Downloaded from Arrow.com.

## PRODUCT IDENTIFICATION SYSTEM

To order or obtain information, e.g., on pricing or delivery, refer to the factory or the listed sales office.

| PART NO. | X | /XX |
|---|---|---|
| Device | Temperature Range | Package |

**Device:**

| | | |
|---|---|---|
| 24AA00: | = | 1.8V, 128 bit I²C™ Serial EEPROM |
| 24AA00T: | = | 1.8V, 128 bit I²C Serial EEPROM (Tape and Reel) |
| 24LC00: | = | 2.5V, 128 bit I²C Serial EEPROM |
| 24LC00T: | = | 2.5V, 128 bit I²C Serial EEPROM (Tape and Reel) |
| 24C00: | = | 5V, 128 bit I²C™ Serial EEPROM |
| 24C00T: | = | 5V, 128 bit I²C™ Serial EEPROM (Tape and Reel) |

**Temperature Range:**

| | | |
|---|---|---|
| I | = | -40°C to +85°C |
| E | = | -40°C to +125°C |

**Package:**

| | | |
|---|---|---|
| P | = | Plastic DIP (300 mil body), 8-lead |
| SN | = | Plastic SOIC (3.90 mm body), 8-lead |
| ST | = | Plastic TSSOP (4.4 mm), 8-lead |
| OT | = | Plastic SOT-23, 5-lead (Tape and Reel only) |
| MC | = | Plastic DFN (2x3x0.9 mm body), 8-lead |
| MNY(1) | = | Plastic TDFN, (2x3x0.75 mm body), 8-lead (Tape and Reel only) |

**Note 1:** "Y" indicates a Nickel Palladium Gold (NiPdAu) finish.

**Examples:**

a) 24AA00-I/P: Industrial Temperature,1.8V PDIP package

b) 24AA00-I/SN: Industrial Temperature, 1.8V, SOIC package

c) 24AA00T-I/OT: Industrial Temperature, 1.8V, SOT-23 package, tape and reel

d) 24LC00-I/P: Industrial Temperature, 2.5V, PDIP package

e) 24C00-E/SN: Extended Temperature, 5V, SOIC package

f) 24LC00T-I/OT: Industrial Temperature, 2.5V, SOT-23 package, tape and reel

g) 24C00T-I/MNY: Industrial Temperature, 5V, TDFN pacakge



Downloaded from Arrow.com.

**NOTES:**


© 1996-2011 Microchip Technology Inc.

Downloaded from Arrow.com.

**Note the following details of the code protection feature on Microchip devices:**

- Microchip products meet the specification contained in their particular Microchip Data Sheet.
- Microchip believes that its family of products is one of the most secure families of its kind on the market today, when used in the intended manner and under normal conditions.
- There are dishonest and possibly illegal methods used to breach the code protection feature. All of these methods, to our knowledge, require using the Microchip products in a manner outside the operating specifications contained in Microchip's Data Sheets. Most likely, the person doing so is engaged in theft of intellectual property.
- Microchip is willing to work with the customer who is concerned about the integrity of their code.
- Neither Microchip nor any other semiconductor manufacturer can guarantee the security of their code. Code protection does not mean that we are guaranteeing the product as "unbreakable."

Code protection is constantly evolving. We at Microchip are committed to continuously improving the code protection features of our products. Attempts to break Microchip's code protection feature may be a violation of the Digital Millennium Copyright Act. If such acts allow unauthorized access to your software or other copyrighted work, you may have a right to sue for relief under that Act.

Information contained in this publication regarding device applications and the like is provided only for your convenience and may be superseded by updates. It is your responsibility to ensure that your application meets with your specifications. MICROCHIP MAKES NO REPRESENTATIONS OR WARRANTIES OF ANY KIND WHETHER EXPRESS OR IMPLIED, WRITTEN OR ORAL, STATUTORY OR OTHERWISE, RELATED TO THE INFORMATION, INCLUDING BUT NOT LIMITED TO ITS CONDITION, QUALITY, PERFORMANCE, MERCHANTABILITY OR FITNESS FOR PURPOSE. Microchip disclaims all liability arising from this information and its use. Use of Microchip devices in life support and/or safety applications is entirely at the buyer's risk, and the buyer agrees to defend, indemnify and hold harmless Microchip from any and all damages, claims, suits, or expenses resulting from such use. No licenses are conveyed, implicitly or otherwise, under any Microchip intellectual property rights.

**Trademarks**

The Microchip name and logo, the Microchip logo, dsPIC, KEELOQ, KEELOQ logo, MPLAB, PIC, PICmicro, PICSTART, PIC32 logo, rfPIC and UNI/O are registered trademarks of Microchip Technology Incorporated in the U.S.A. and other countries.

FilterLab, Hampshire, HI-TECH C, Linear Active Thermistor, MXDEV, MXLAB, SEEVAL and The Embedded Control Solutions Company are registered trademarks of Microchip Technology Incorporated in the U.S.A.

Analog-for-the-Digital Age, Application Maestro, chipKIT, chipKIT logo, CodeGuard, dsPICDEM, dsPICDEM.net, dsPICworks, dsSPEAK, ECAN, ECONOMONITOR, FanSense, HI-TIDE, In-Circuit Serial Programming, ICSP, Mindi, MiWi, MPASM, MPLAB Certified logo, MPLIB, MPLINK, mTouch, Omniscient Code Generation, PICC, PICC-18, PICDEM, PICDEM.net, PICkit, PICtail, REAL ICE, rfLAB, Select Mode, Total Endurance, TSHARC, UniWinDriver, WiperLock and ZENA are trademarks of Microchip Technology Incorporated in the U.S.A. and other countries.

SQTP is a service mark of Microchip Technology Incorporated in the U.S.A.

All other trademarks mentioned herein are property of their respective companies.

© 1996-2011, Microchip Technology Incorporated, Printed in the U.S.A., All Rights Reserved.

Printed on recycled paper.

ISBN: 978-1-61341-767-6

QUALITY MANAGEMENT SYSTEM
CERTIFIED BY DNV
ISO/TS 16949:2009

*Microchip received ISO/TS-16949:2009 certification for its worldwide headquarters, design and wafer fabrication facilities in Chandler and Tempe, Arizona; Gresham, Oregon and design centers in California and India. The Company's quality system processes and procedures are for its PIC® MCUs and dsPIC® DSCs, KEELOQ® code hopping devices, Serial EEPROMs, microperipherals, nonvolatile memory and analog products. In addition, Microchip's quality system for the design and manufacture of development systems is ISO 9001:2000 certified.*



Downloaded from Arrow.com.

# Worldwide Sales and Service

## AMERICAS

**Corporate Office**
2355 West Chandler Blvd.
Chandler, AZ 85224-6199
Tel: 480-792-7200
Fax: 480-792-7277
Technical Support:
http://www.microchip.com/support
Web Address:
www.microchip.com

**Atlanta**
Duluth, GA
Tel: 678-957-9614
Fax: 678-957-1455

**Boston**
Westborough, MA
Tel: 774-760-0087
Fax: 774-760-0088

**Chicago**
Itasca, IL
Tel: 630-285-0071
Fax: 630-285-0075

**Cleveland**
Independence, OH
Tel: 216-447-0464
Fax: 216-447-0643

**Dallas**
Addison, TX
Tel: 972-818-7423
Fax: 972-818-2924

**Detroit**
Farmington Hills, MI
Tel: 248-538-2250
Fax: 248-538-2260

**Indianapolis**
Noblesville, IN
Tel: 317-773-8323
Fax: 317-773-5453

**Los Angeles**
Mission Viejo, CA
Tel: 949-462-9523
Fax: 949-462-9608

**Santa Clara**
Santa Clara, CA
Tel: 408-961-6444
Fax: 408-961-6445

**Toronto**
Mississauga, Ontario, Canada
Tel: 905-673-0699
Fax: 905-673-6509

## ASIA/PACIFIC

**Asia Pacific Office**
Suites 3707-14, 37th Floor
Tower 6, The Gateway
Harbour City, Kowloon
Hong Kong
Tel: 852-2401-1200
Fax: 852-2401-3431

**Australia - Sydney**
Tel: 61-2-9868-6733
Fax: 61-2-9868-6755

**China - Beijing**
Tel: 86-10-8569-7000
Fax: 86-10-8528-2104

**China - Chengdu**
Tel: 86-28-8665-5511
Fax: 86-28-8665-7889

**China - Chongqing**
Tel: 86-23-8980-9588
Fax: 86-23-8980-9500

**China - Hangzhou**
Tel: 86-571-2819-3187
Fax: 86-571-2819-3189

**China - Hong Kong SAR**
Tel: 852-2401-1200
Fax: 852-2401-3431

**China - Nanjing**
Tel: 86-25-8473-2460
Fax: 86-25-8473-2470

**China - Qingdao**
Tel: 86-532-8502-7355
Fax: 86-532-8502-7205

**China - Shanghai**
Tel: 86-21-5407-5533
Fax: 86-21-5407-5066

**China - Shenyang**
Tel: 86-24-2334-2829
Fax: 86-24-2334-2393

**China - Shenzhen**
Tel: 86-755-8203-2660
Fax: 86-755-8203-1760

**China - Wuhan**
Tel: 86-27-5980-5300
Fax: 86-27-5980-5118

**China - Xian**
Tel: 86-29-8833-7252
Fax: 86-29-8833-7256

**China - Xiamen**
Tel: 86-592-2388138
Fax: 86-592-2388130

**China - Zhuhai**
Tel: 86-756-3210040
Fax: 86-756-3210049

## ASIA/PACIFIC

**India - Bangalore**
Tel: 91-80-3090-4444
Fax: 91-80-3090-4123

**India - New Delhi**
Tel: 91-11-4160-8631
Fax: 91-11-4160-8632

**India - Pune**
Tel: 91-20-2566-1512
Fax: 91-20-2566-1513

**Japan - Yokohama**
Tel: 81-45-471- 6166
Fax: 81-45-471-6122

**Korea - Daegu**
Tel: 82-53-744-4301
Fax: 82-53-744-4302

**Korea - Seoul**
Tel: 82-2-554-7200
Fax: 82-2-558-5932 or
82-2-558-5934

**Malaysia - Kuala Lumpur**
Tel: 60-3-6201-9857
Fax: 60-3-6201-9859

**Malaysia - Penang**
Tel: 60-4-227-8870
Fax: 60-4-227-4068

**Philippines - Manila**
Tel: 63-2-634-9065
Fax: 63-2-634-9069

**Singapore**
Tel: 65-6334-8870
Fax: 65-6334-8850

**Taiwan - Hsin Chu**
Tel: 886-3-5778-366
Fax: 886-3-5770-955

**Taiwan - Kaohsiung**
Tel: 886-7-536-4818
Fax: 886-7-330-9305

**Taiwan - Taipei**
Tel: 886-2-2500-6610
Fax: 886-2-2508-0102

**Thailand - Bangkok**
Tel: 66-2-694-1351
Fax: 66-2-694-1350

## EUROPE

**Austria - Wels**
Tel: 43-7242-2244-39
Fax: 43-7242-2244-393

**Denmark - Copenhagen**
Tel: 45-4450-2828
Fax: 45-4485-2829

**France - Paris**
Tel: 33-1-69-53-63-20
Fax: 33-1-69-30-90-79

**Germany - Munich**
Tel: 49-89-627-144-0
Fax: 49-89-627-144-44

**Italy - Milan**
Tel: 39-0331-742611
Fax: 39-0331-466781

**Netherlands - Drunen**
Tel: 31-416-690399
Fax: 31-416-690340

**Spain - Madrid**
Tel: 34-91-708-08-90
Fax: 34-91-708-08-91

**UK - Wokingham**
Tel: 44-118-921-5869
Fax: 44-118-921-5820

08/02/11


© 1996-2011 Microchip Technology Inc.

Downloaded from Arrow.com.