■ Dimensions in mm (not to scale)

Type	Part Numbers	H : boss	Packaging
	ESE22MH21	0.5	Polyethylene Bag (Bulk)
	ESE22MH27	1.0	Polyethylene Bag (Bulk)
	ESE22MH22	0.5	Embossed Taping (Reel Pack)
	ESE22MH27T	1.0	Embossed Taping (Reel Pack)

Type	Part Numbers	H : boss	Packaging
	ESE22MH23	0.5	Polyethylene Bag (Bulk)
	ESE22MH28	1.0	Polyethylene Bag (Bulk)
	ESE22MH24	0.5	Embossed Taping (Reel Pack)
	ESE22MH28T	1.0	Embossed Taping (Reel Pack)

No. 1 1-pole 1-throw

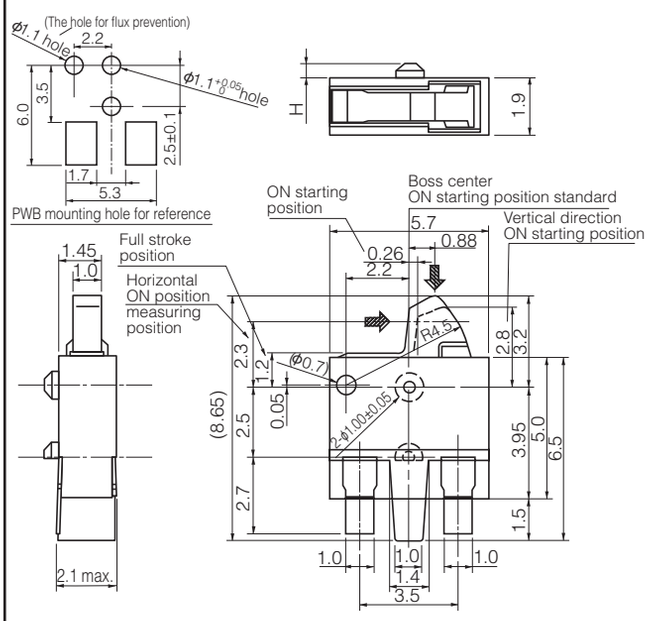

No. 2 1-pole 1-throw

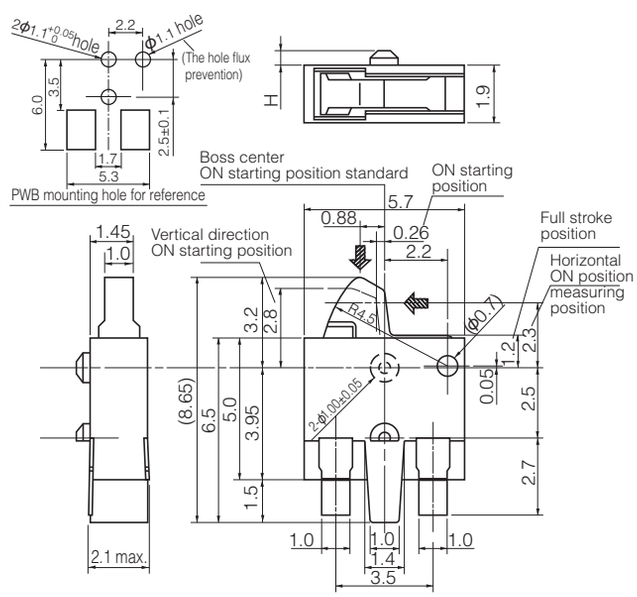

Part Numbers	Packaging
ESE22MV21	Polyethylene Bag (Bulk)
ESE22MV21T	Embossed Taping (Reel Pack)

No. 3 1-pole 1-throw

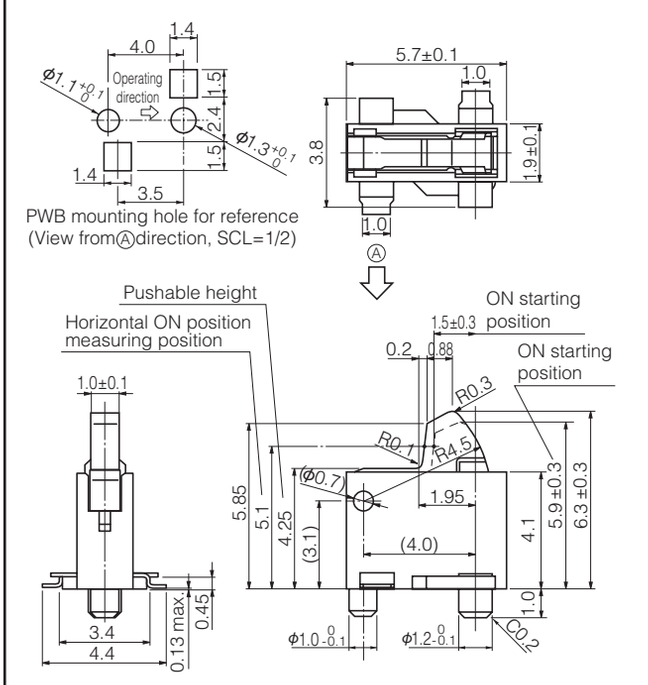

Part Numbers	Packaging
ESE22MH51	Polyethylene Bag (Bulk)
ESE22MH52	Embossed Taping (Reel Pack)

No. 4 1-pole 1-throw

With Frame Type

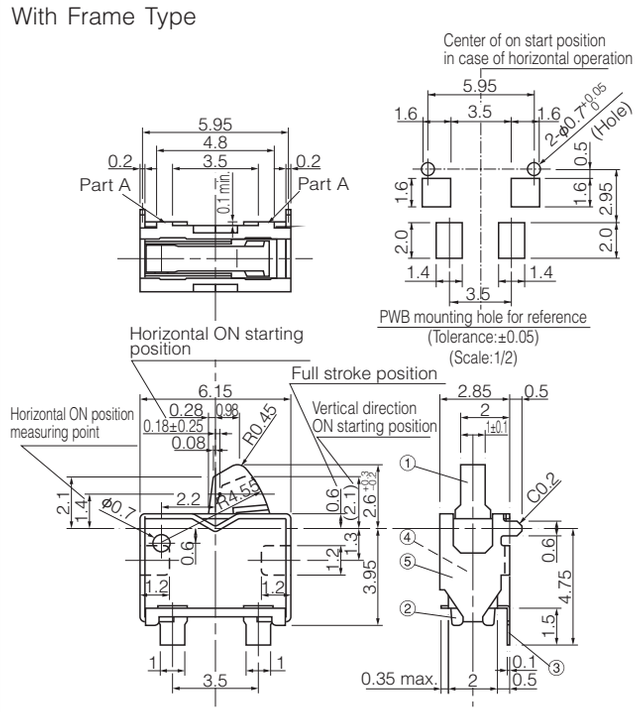

Design and specifications are each subject to change without notice. Ask factory for the current technical specifications before purchase and/or use.
Should a safety concern arise regarding this product, please be sure to contact us immediately.

Downloaded from Arrow.com.

■ Dimensions in mm (not to scale)

Part Numbers	Packaging
ESE22MH53	Polyethylene Bag (Bulk)
ESE22MH54	Embossed Taping (Reel Pack)

No. 5 1-pole 1-throw

With Frame Type

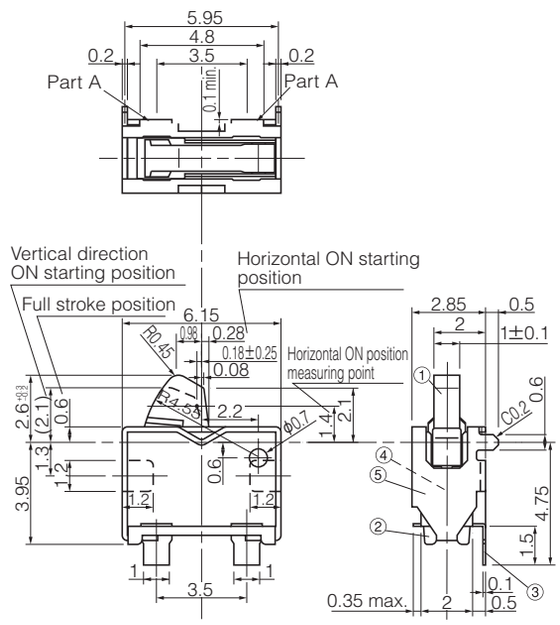

Part Numbers	Packaging
ESE22MH57	Polyethylene Bag (Bulk)

No. 6 1-pole 1-throw

Solder lug Type

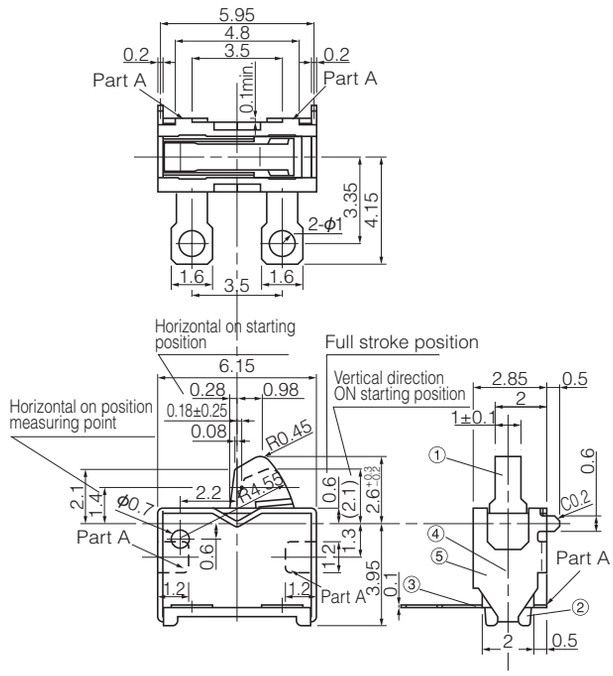

Part Numbers	Packaging
ESE22MH58	Polyethylene Bag (Bulk)

No. 7 1-pole 1-throw

Solder lug Type

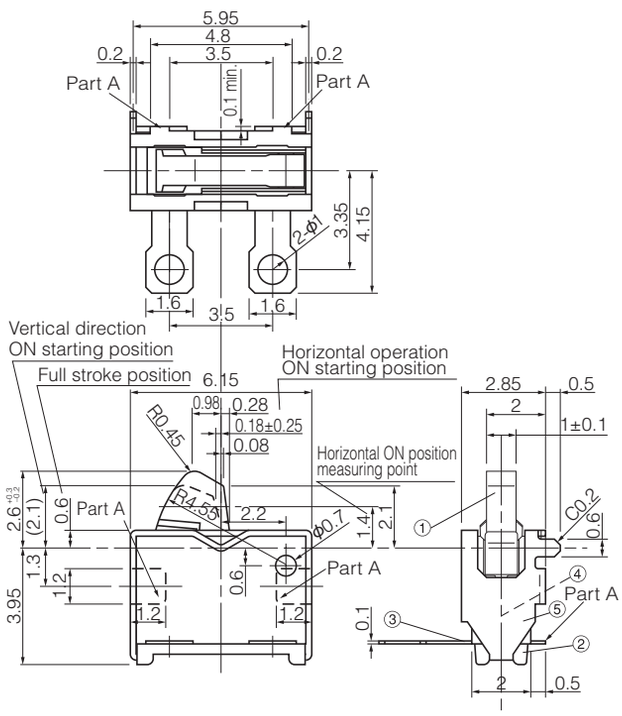

■ Circuit Diagram

1-pole 1-throw (N.O)

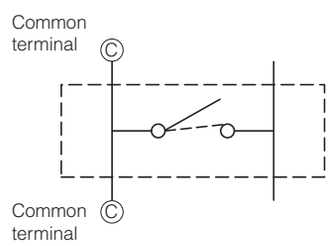

■ Packaging Specifications

Standard Reel Dimensions in mm (not to scale)

Taping Reel Embossed Carrier Taping

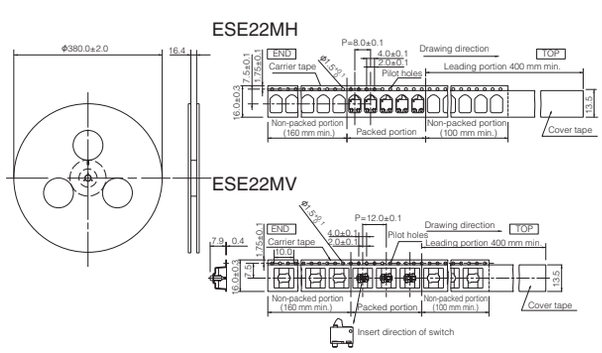

Design and specifications are each subject to change without notice. Ask factory for the current technical specifications before purchase and/or use.
Should a safety concern arise regarding this product, please be sure to contact us immediately.

Downloaded from Arrow.com.