TABLE OF CONTENTS

FEATURES 1
GENERAL DESCRIPTION 3
PIN CONFIGURATION 4
DESCRIPTION OF PIN FUNCTIONS 6
FUNCTIONAL DESCRIPTION 17
- SUPER I/O REGISTERS 17
- HOST PROCESSOR INTERFACE 17
- FLOPPY DISK CONTROLLER 18
- FLOPPY DISK CONTROLLER INTERNAL REGISTERS 18

COMMAND SET/DESCRIPTIONS 41
INSTRUCTION SET 45
PARALLEL PORT FLOPPY DISK CONTROLLER 71
SERIAL PORT (UART) 73
INFRARED INTERFACE 87
PARALLEL PORT 88
- IBM XT/AT COMPATIBLE, BI-DIRECTIONAL AND EPP MODES 90
- EXTENDED CAPABILITIES PARALLEL PORT 96

AUTO POWER MANAGEMENT 108
INTEGRATED DRIVE ELECTRONICS INTERFACE 114
CONFIGURATION 118
OPERATIONAL DESCRIPTION 136
- MAXIMUM GUARANTEED RATINGS 136
- DC ELECTRICAL CHARACTERISTICS 136

TIMING DIAGRAMS 139
- ECP PARALLEL PORT TIMING 156

Downloaded from Arrow.com.

GENERAL DESCRIPTION

The SMSC FDC37C669 PC 95 Compatible Super I/O Floppy Disk Controller with Infrared Support utilizes SMSC's proven SuperCell technology for increased product reliability and functionality. The FDC37C669 is PC95 compliant and is optimized for motherboard applications. The FDC37C669 supports both 1 Mbps and 2 Mbps data rates and vertical vertical recording operation at 1 Mbps Data Rate.

The FDC37C669 incorporates SMSC's true CMOS 765B floppy disk controller, advanced digital data separator, 16 byte data FIFO, two 16C550 compatible UARTs, one Multi-Mode parallel port which includes ChiProtect circuitry plus EPP and ECP support, IDE interface, on-chip 12 mA AT bus drivers, game port chip select and two floppy direct drive support. The true CMOS 765B core provides 100% compatibility with IBM PC/XT and PC/AT architectures in addition to providing data overflow and underflow protection. The SMSC advanced digital data separator incorporates SMSC's patented data separator technology, allowing for ease of testing and use. Both on-chip UARTs are compatible with the NS16C550. One UART includes additional support for a Serial Infrared Interface, complying with IrDA, HPSIR, and ASKIR formats (used by Sharp, Apple Newton, and other PDAs). The parallel port, the IDE interface, and the game port select logic are compatible with IBM PC/AT architectures. The FDC37C669 incorporates sophisticated power control circuitry (PCC). The PCC supports multiple low power down modes.

The FDC37C669 Floppy Disk Controller incorporates Software Configurable Logic (SCL) for ease of use. Use of the SCL feature allows programmable system configuration of key functions such as the FDC, parallel port, and UARTs. The parallel port ChiProtect prevents damage caused by the printer being powered when the FDC37C669 is not powered.

The FDC37C669 does not require any external filter components, and is, therefore easy to use and offers lower system cost and reduced board area. The FDC37C669 is software and register compatible with SMSC's proprietary 82077AA core.

Downloaded from Arrow.com.

PIN CONFIGURATION

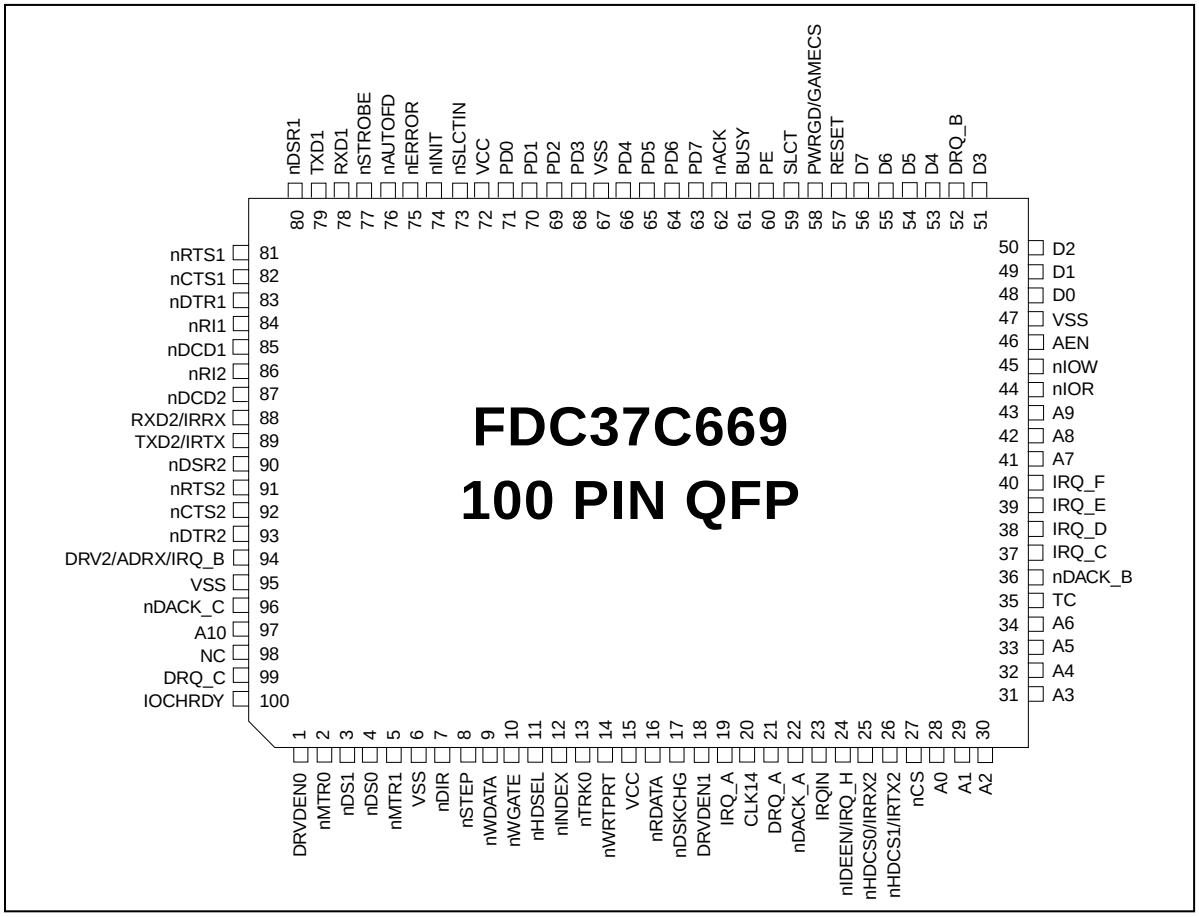

Downloaded from Arrow.com.

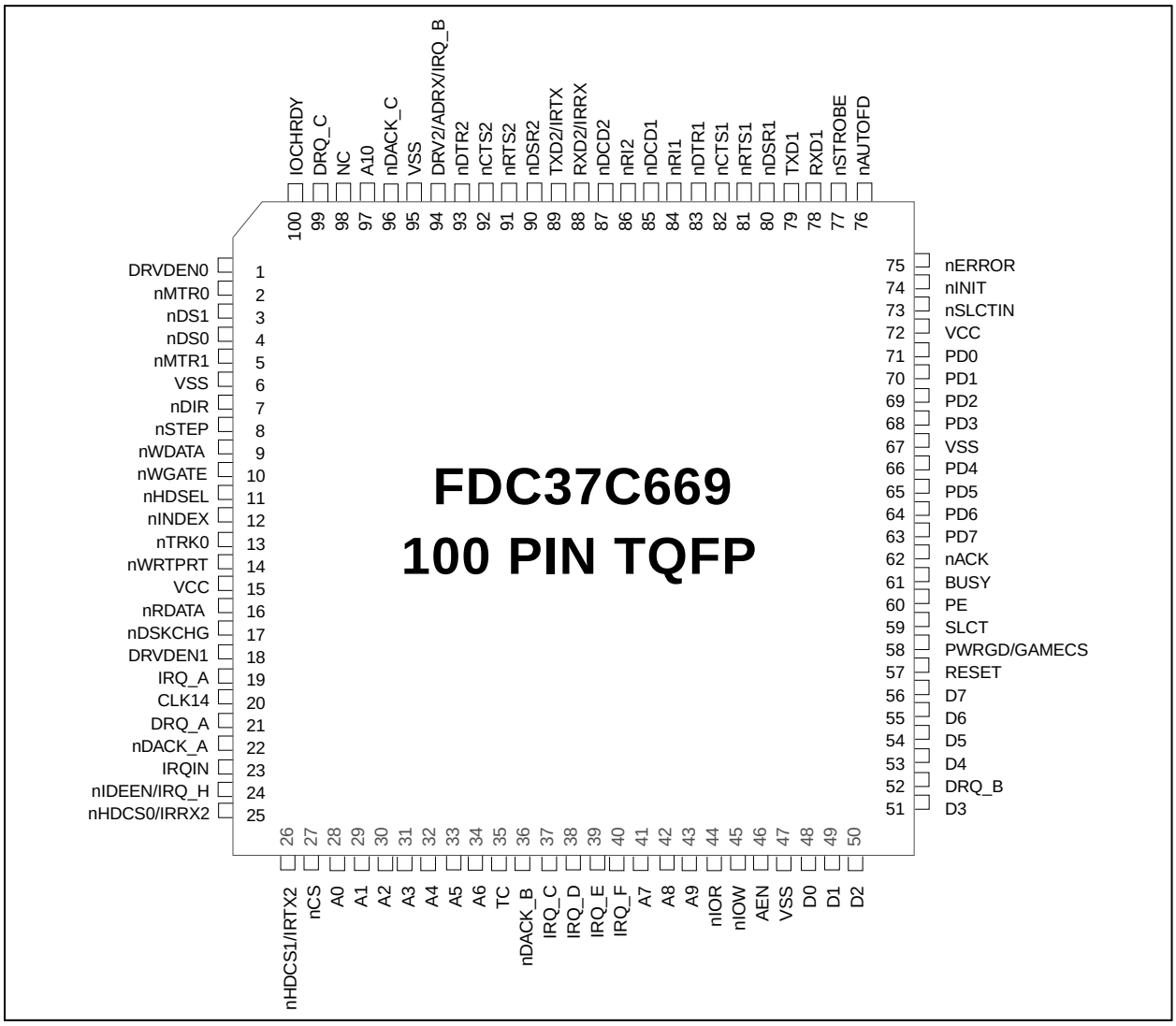

Downloaded from Arrow.com.

DESCRIPTION OF PIN FUNCTIONS

QFP/ TQFP PIN NO.	NAME	SYMBOL	BUFFER TYPE	DESCRIPTION
HOST PROCESSOR INTERFACE				
48-51 53-56	Data Bus 0-7	D0-D7	*I/O24*	The data bus connection used by the host microprocessor to transmit data to and from the chip. These pins are in a high-impedance state when not in the output mode.
44	nI/O Read	nIOR	I	This active low signal is issued by the host microprocessor to indicate a read operation.
45	nI/O Write	nIOW	I	This active low signal is issued by the host microprocessor to indicate a write operation.
46	Address Enable	AEN	I	Active high Address Enable indicates DMA operations on the host data bus. Used internally to qualify appropriate address decodes.
28-34 41-43, 97	I/O Address	A0-A10	I	These host address bits determine the I/O address to be accessed during nIOR and nIOW cycles. These bits are latched internally by the leading edge of nIOR and nIOW. All internal address decodes use the full A0 to A10 address bits.
21,52, 99	DMA Request A, B, C	DRQ_A DRQ_B DRQ_C	*O24*	This active high output is the DMA request for byte transfers of data between the host and the chip. This signal is cleared on the last byte of the data transfer by the nDACK signal going low (or by nIOR going low if nDACK was already low as in demand mode).
22,36, 96	nDMA Acknowledge A, B, C	nDACK_A nDACK_B nDACK_C	I	An active low input acknowledging the request for a DMA transfer of data between the host and the chip. This input enables the DMA read or write internally.
35	Terminal Count	TC	I	This signal indicates to the chip that DMA data transfer is complete. TC is only accepted when nDACK_x is low. In AT and PS/2 model 30 modes, TC is active high and in PS/2 mode, TC is active low.

Downloaded from Arrow.com.

DESCRIPTION OF PIN FUNCTIONS

QFP/ TQFP PIN NO.	NAME	SYMBOL	BUFFER TYPE	DESCRIPTION
19, 37-40,	Interrupt Request A, C, D, E, F,	IRQ_A IRQ_C IRQ_D IRQ_E IRQ_F	*O24* *OD24*	The interrupt request from the logical device or IRQIN is output on one of the IRQA-G signals. Refer to the configuration registers for more information. If EPP or ECP Mode is enabled, this output is pulsed low, then released to allow sharing of interrupts.
27	Chip Select Input	nCS	I	When enabled, this active low pin serves as an input for an external decoder circuit which is used to qualify address lines above A10.
57	Reset	RESET	IS	This active high signal resets the chip and must be valid for 500 ns minimum. The effect on the internal registers is described in the appropriate section. The configuration registers are not affected by this reset.
FLOPPY DISK INTERFACE				
16	nRead Disk Data	nRDATA	IS	Raw serial bit stream from the disk drive, low active. Each falling edge represents a flux transition of the encoded data.
10	nWrite Gate	nWGATE	*OD48*	This active low high current driver allows current to flow through the write head. It becomes active just prior to writing to the diskette.
9	nWrite Data	nWDATA	*OD48*	This active low high current driver provides the encoded data to the disk drive. Each falling edge causes a flux transition on the media.
11	nHead Select	nHDSEL	*OD48*	This high current output selects the floppy disk side for reading or writing. A logic "1" on this pin means side 0 will be accessed, while a logic "0" means side 1 will be accessed.
7	Direction Control	nDIR	*OD48*	This high current low active output determines the direction of the head movement. A logic "1" on this pin means outward motion, while a logic "0" means inward motion.

Downloaded from Arrow.com.

DESCRIPTION OF PIN FUNCTIONS

QFP/ TQFP PIN NO.	NAME	SYMBOL	BUFFER TYPE	DESCRIPTION
8	nStep Pulse	nSTEP	*OD48*	This active low high current driver issues a low pulse for each track-to-track movement of the head.
17	Disk Change	nDSKCHG	IS	This input senses that the drive door is open or that the diskette has possibly been changed since the last drive selection. This input is inverted and read via bit 7 of I/O address 3F7H.
4,3	nDrive Select O,1	nDS0,1	*OD48*	Active low open drain outputs select drives 0-1.
2,5	nMotor On 0,1	nMTR0,1	*OD48*	These active low open drain outputs select motor drives 0-1.
1	DRVDEN0	DRVDEN0	*OD48*	Indicates the drive and media selected. Refer to configuration registers CR03, CR0B, CR1F.
14	nWrite Protected	nWRTPRT	IS	This active low Schmitt Trigger input senses from the disk drive that a disk is write protected. Any write command is ignored.
13	wTrack 00	nTRK00	IS	This active low Schmitt Trigger input senses from the disk drive that the head is positioned over the outermost track.
12	nIndex	nINDEX	IS	This active low Schmitt Trigger input senses from the disk drive that the head is positioned over the beginning of a track, as marked by an index hole.
18	DRVDEN1	DRVDEN 1	*OD48*	Indicates the drive and media selected. Refer to configuration registers CR03, CR0B, CR1F.
SERIAL PORT INTERFACE				
88	Receive Data 2	RXD2/IRRX	I	Receiver serial data input for port 2. IR Receive Data
89	Transmit Data 2	TXD2/IRTX	*O24*	Transmit serial data output for port 2. IR transmit data.
78	Receive Data 1	RXD1	I	Reciever serial data input for port 1.
79	Transmit Data 1	TXD1	*024*	Transmit serial data output for port 1.

Downloaded from Arrow.com.

DESCRIPTION OF PIN FUNCTIONS

QFP/ TQFP PIN NO.	NAME	SYMBOL	BUFFER TYPE	DESCRIPTION
81,91	nRequest to Send (System Option)	nRTS1 nRTS2 (SYSOPT)	*O4*	Active low Request to Send outputs for the Serial Port. Handshake output signal notifies modem that the UART is ready to transmit data. This signal can be programmed by writing to bit 1 of Modem Control Register (MCR). The hardware reset will reset the nRTS signal to inactive mode (high). Forced inactive during loop mode operation. At the trailing edge of hardware reset, the nRTS2 input is latched to determine the configuration base address. 0 : INDEX Base I/O Address = 3F0 Hex 1 : INDEX Base I/O Address = 370 Hex
83,93	nData Terminal Ready	nDTR1 nDTR2	*O4*	Active low Data Terminal Ready outputs for the serial port. Handshake output signal notifies modem that the UART is ready to establish data communication link. This signal can be programmed by writing to bit 0 of Modem Control Register (MCR). The hardware reset will reset the nDTR signal to inactive mode (high). Forced inactive during loop mode operation.
82,92	nClear to Send	nCTS1 nCTS2	I	Active low Clear to Send inputs for the serial port. Handshake signal which notifies the UART that the modem is ready to receive data. The CPU can monitor the status of nCTS signal by reading bit 4 of Modem Status Register (MSR). A nCTS signal state change from low to high after the last MSR read will set MSR bit 0 to a 1. If bit 3 of Interrupt Enable Register is set, the interrupt is generated when nCTS changes state. The nCTS signal has no effect on the transmitter. Note: Bit 4 of MSR is the complement of nCTS.

Downloaded from Arrow.com.

DESCRIPTION OF PIN FUNCTIONS

QFP/ TQFP PIN NO.	NAME	SYMBOL	BUFFER TYPE	DESCRIPTION
80,90	nData Set Ready	nDSR1 nDSR2	I	Active low Data Set Ready inputs for the serial port. Handshake signal which notifies the UART that the modem is ready to establish the communication link. The CPU can monitor the status of nDSR signal by reading bit 5 of Modem Status Register (MSR). A nDSR signal state change from low to high after the last MSR read will set MSR bit 1 to a 1. If bit 3 of Interrupt Enable Register is set, the interrupt is generated when nDSR changes state. Note: Bit 5 of MSR is the complement of nDSR.
85,87	nData Carrier Detect	nDCD1 nDCD2	I	Active low Data Carrier Detect inputs for the serial port. Handshake signal which notifies the UART that carrier signal is detected by the modem. The CPU can monitor the status of nDCD signal by reading bit 7 of Modem Status Register (MSR). A nDCD signal state change from low to high after the last MSR read will set MSR bit 3 to a 1. If bit 3 of Interrupt Enable Register is set, the interrupt is generated when nDCD changes state. Note: Bit 7 of MSR is the complement of nDCD.
84,86	nRing Indicator	nRI1 nRI2	I	Active low Ring Indicator inputs for the serial port. Handshake signal which notifies the UART that the telephone ring signal is detected by the modem. The CPU can monitor the status of nRI signal by reading bit 6 of Modem Status Register (MSR). A nRI signal state change from low to high after the last MSR read will set MSR bit 2 to a 1. If bit 3 of Interrupt Enable Register is set, the interrupt is generated when nRI changes state. Note: Bit 6 of MSR is the complement of nRI.
PARALLEL PORT INTERFACE				

Downloaded from Arrow.com.

DESCRIPTION OF PIN FUNCTIONS

QFP/ TQFP PIN NO.	NAME	SYMBOL	BUFFER TYPE	DESCRIPTION
73	nPrinter Select Input	nSLCTIN	*OD24* *0P24*	This active low output selects the printer. This is the complement of bit 3 of the Printer Control Register. Refer to Parallel Port description for use of this pin in ECP and EPP mode.
74	nInitiate Output	nINIT	*OD24* *0P24*	This output is bit 2 of the printer control register. This is used to initiate the printer when low. Refer to Parallel Port description for use of this pin in ECP and EPP mode.
76	nAutofeed Output	nAUTOFD	*OD24* *0P24*	This output goes low to cause the printer to automatically feed one line after each line is printed. The nAUTOFD output is the complement of bit 1 of the Printer Control Register. Refer to Parallel Port description for use of this pin in ECP and EPP mode.
77	nStrobe Output	nSTROBE	*OD24* *0P24*	An active low pulse on this output is used to strobe the printer data into the printer. The nSTROBE output is the complement of bit 0 of the Printer Control Register. Refer to Parallel Port description for use of this pin in ECP and EPP mode.
61	Busy	BUSY	I	This is a status output from the printer, a high indicating that the printer is not ready to receive new data. Bit 7 of the Printer Status Register is the complement of the BUSY input. Refer to Parallel Port description for use of this pin in ECP and EPP mode.
62	nAcknowledge	nACK	I	A low active output from the printer indicating that it has received the data and is ready to accept new data. Bit 6 of the Printer Status Register reads the nACK input. Refer to Parallel Port description for use of this pin in ECP and EPP mode.

Downloaded from Arrow.com.

DESCRIPTION OF PIN FUNCTIONS

QFP/ TQFP PIN NO.	NAME	SYMBOL	BUFFER TYPE	DESCRIPTION
60	Paper End	PE	I	Another status output from the printer, a high indicating that the printer is out of paper. Bit 5 of the Printer Status Register reads the PE input. Refer to Parallel Port description for use of this pin in ECP and EPP mode.
59	Printer Selected Status	SLCT	I	This high active output from the printer indicates that it has power on. Bit 4 of the Printer Status Register reads the SLCT input. Refer to Parallel Port description for use of this pin in ECP and EPP mode.
75	nError	nERROR	I	A low on this input from the printer indicates that there is a error condition at the printer. Bit 3 of the Printer Status register reads the nERR input. Refer to Parallel Port description for use of this pin in ECP and EPP mode.
63-66 68-71	Port Data	PD0-PD7	*I/O24*	The bi-directional parallel data bus is used to transfer information between CPU and peripherals.
100	IOCHRDY	IOCHRDY	*OD24P*	In EPP mode, this pin is pulled low to extend the read/write command. This pin has an internal pull-up.
IDE/ALT IR PINS				
24	nIDE Enable	nIDEEN	*O24P* (Note 1)	This active low signal is active when the IDE is enabled and the I/O address is accessing an IDE register.
	Interrupt Request H	IRQ_H	*024*	The interrupt request from a logical device or IRQIN may be output on the IRQH signal. Refer to the configuration registers for more information.
			OD24	If EPP or ECP Mode is enabled, this output is pulsed low, then released to allow sharing of interrupts.

Downloaded from Arrow.com.

25	nIDE Chip Select 0 IRRX2	nHDCS0 IRRX2	*O24P* (Note 1) I	This is the Hard Disk Chip select corresponding to the eight control block addresses. Alternate IR Receive input
26	nIDE Chip Select 1 IR Transmit 2	nHDCS1 IRTX2	*O24P* (Note 1) *O24P*	This is the Hard Disk Chip select corresponding to the alternate status register. Alternate IR transmit output
MISCELLANEOUS				
20	CLOCK 14	CLK14	ICLK	The external connection to a single source 14.318 MHz clock.

Downloaded from Arrow.com.

DESCRIPTION OF PIN FUNCTIONS

QFP/ TQFP PIN NO.	NAME	SYMBOL	BUFFER TYPE	DESCRIPTION
94	Drive 2	DRV2	I	In PS/2 mode, this input indicates whether a second drive is connected; DRV2 should be low if a second drive is connected. This status is reflected in a read of Status Register A.
	Address X	nADRX	*OD24*	Active low address decode out: used to decode a 1, 8, or 16 byte address block. (An external pull-up is required). Refer to Configuration registers CR03, CR08 and CR09 for more information. This pin has a 30ua internal pull-up. The interrupt request from a logical device or IRQIN may be output on IRQ_B. Refer to the configuration registers for more information.
	Interrupt Request B	IRQ_B	*024* *(OD24)*	(If EPP or ECP Mode is enabled, this output is pulsed low, then released to allow sharing of interrupts.)
23		IRQIN	I	This pin is used to steer an interrupt signal from an external device onto one of eight IRQ outputs IRQA-H.
58		PWRGD	I	This active high input indicates that the power (V_{CC}) is valid. For device operation, PWRGD must be active. When PWRGD is inactive, all inputs to Mercury are disconnected and put into a low power mode; all outputs are put into high impedance. The contents of all registers are preserved as long as V_{CC} has a valid value. The driver current drain in this mode drops to ISTBY - standby current. This input has an internal 30ua pull-up.
		nGAMECS	*O4*	This is the Game Port Chip Select output - active low. It will go active when the I/O address, qualified by AEN, matches that selected in Configuration register CR1E.
98	I/O Power	*NC*		No Connect
15,72	Power	V_{CC}		Positive Supply Voltage.

Downloaded from Arrow.com.

DESCRIPTION OF PIN FUNCTIONS

QFP/ TQFP PIN NO.	NAME	SYMBOL	BUFFER TYPE	DESCRIPTION
6,47, 67,95	Ground	GND		Ground Supply.

Note 1: Refer to Configuration Register 00 for information on the pull-ups for these pins!
Note IDE does not decode for 377, 3F7
Note RI and the Serial interrupt is always active if system power is applied to the chip.

BUFFER TYPE DESCRIPTIONS

BUFFER TYPE	DESCRIPTION
I/O24	*Input/Output. 24 mA sink; 12 mA source*
O24	*Output. 24 mA sink; 12 mA source*
OD48	*Open drain. 48 mA sink*
O4	*Output. 4 mA sink; 2 mA source*
OD24	*Output. 24 mA sink*
OD24P	*Open drain. 24 mA sink; 30μA source*
OP24	*Output. 24 mA sink; 4 mA source*
024P	*Output. 24 mA sink; 12 mA source; with 30μA pull-up*
OCLK	*Output to external crystal*
ICLK	*Input to Crystal Oscillator Circuit (CMOS levels)*
I	*Input TTL compatible.*
IS	*Input with Schmitt Trigger.*

Downloaded from Arrow.com.

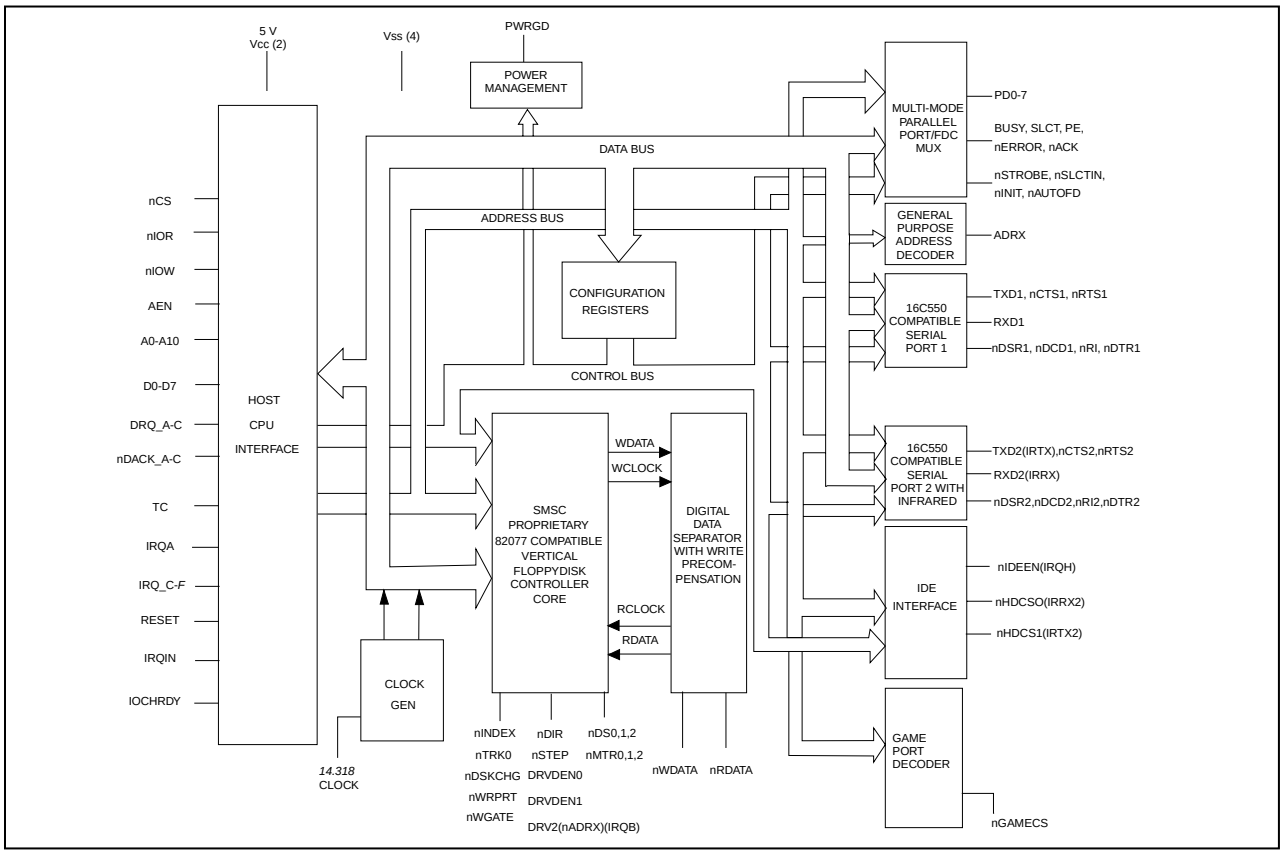

FIGURE 1 - FDC37C669 BLOCK DIAGRAM

Downloaded from Arrow.com.

FUNCTIONAL DESCRIPTION

SUPER I/O REGISTERS

The address map, shown below in Table 1, shows the addresses of the different blocks of the Super I/O immediately after power up. The base addresses of the FDC, IDE, serial and parallel ports can be moved via the configuration registers. Some addresses are used to access more than one register.

HOST PROCESSOR INTERFACE

The host processor communicates with the FDC37C669 through a series of read/write registers. The port addresses for these registers are shown in Table 1. Register access is accomplished through programmed I/O or DMA transfers. All registers are 8 bits wide except the IDE data register at port 1F0H which is 16 bits wide. All host interface output buffers are capable of sinking a minimum of 12 mA.

Table 1 - FDC37C669 Block Addresses

ADDRESS	BLOCK NAME	NOTES
3F0, 3F1 or 370, 371	Configuration	Write only; Note 1, 2
Base +0,1	Floppy Disk	Read only; Disabled at power up; Note 2
Base +[2:5, 7]	Floppy Disk	Disabled at power up; Note 2
Base +[0:7]	Serial Port Com 1	Disabled at power up; Note 2
Base +[0:7]	Serial Port Com 2	Disabled at power up; Note 2
Base +[0:3] all modes Base +[4:7] for EPP Base +[400:403] for ECP	Parallel Port	Disabled at power up; Note 2
Base1 +[0:7] Base2 +[6]	IDE	Disabled at power up; Note 2

Note 1: Configuration registers can only be modified in configuration mode, refer to the configuration register description for more information. Access to status registers A and B of the floppy disk is disabled in configuration mode.

Note 2: The base addresses must be set in the configuration registers before accessing the logical devices.

Downloaded from Arrow.com.

FLOPPY DISK CONTROLLER

The Floppy Disk Controller (FDC) provides the interface between a host microprocessor and the floppy disk drives. The FDC integrates the functions of the Formatter/Controller, Digital Data Separator, Write Precompensation and Data Rate Selection logic for an IBM XT/AT compatible FDC. The true CMOS 765B core guarantees 100% IBM PC XT/AT compatibility in addition to providing data overflow and underflow protection.

The FDC37C669 is compatible to the 82077AA using SMSC's proprietary floppy disk controller core.

FLOPPY DISK CONTROLLER INTERNAL REGISTERS

The Floppy Disk Controller contains eight internal registers which facilitate the interfacing between the host microprocessor and the disk drive. Table 2 shows the addresses required to access these registers. Registers other than the ones shown are not supported. The rest of the FDC description assumes the Base I/O Address is 3F0.

Table 2 - Status, Data and Control Registers

BASE I/O ADDRESS		REGISTER	
+0	R	Status Register A	SRA
+1	R	Status Register B	SRB
+2	R/W	Digital Output Register	DOR
+3	R/W	Tape Drive Register	TSR
+4	R	Main Status Register	MSR
+4	W	Data Rate Select Register	DSR
+5	R/W	Data (FIFO)	FIFO
+6		Reserved	
+7	R	Digital Input Register	DIR
+7	W	Configuration Control Register	CCR

For information on the floppy disk on Parallel Port pins, refer to Configuration Register CR4 and Parallel Port Floppy Disk Controller description.

Downloaded from Arrow.com.

STATUS REGISTER A (SRA)

Address 3F0 READ ONLY

This register is read-only and monitors the state of the FINTR pin and several disk interface pins, in PS/2 and Model 30 modes. The SRA can be accessed at any time when in PS/2 mode. In the PC/AT mode the data bus pins D0 - D7 are held in a high impedance state for a read of address 3F0.

PS/2 Mode

	7	6	5	4	3	2	1	0
	INT PENDING	nDRV2	STEP	nTRK0	HDSEL	nINDX	nWP	DIR
RESET COND.	0	N/A	0	N/A	0	N/A	N/A	0

BIT 0 DIRECTION

Active high status indicating the direction of head movement. A logic "1" indicating inward direction a logic "0" outward.

BIT 1 nWRITE PROTECT

Active low status of the WRITE PROTECT disk interface input. A logic "0" indicating that the disk is write protected.

BIT 2 nINDEX

Active low status of the INDEX disk interface input.

BIT 3 HEAD SELECT

Active high status of the HDSEL disk interface input. A logic "1" selects side 1 and a logic "0" selects side 0.

BIT 4 nTRACK 0

Active low status of the TRK0 disk interface input.

BIT 5 STEP

Active high status of the STEP output disk interface output pin.

BIT 6 nDRV2

Active low status of the DRV2 disk interface input pin, indicating that a second drive has been installed.

BIT 7 INTERRUPT PENDING

Active high bit indicating the state of the Floppy Disk Interrupt output.

Downloaded from Arrow.com.

PS/2 Model 30 Mode

	7	6	5	4	3	2	1	0
	INT PENDING	DRQ	STEP F/F	TRK0	nHDSEL	INDX	WP	nDIR
RESET COND.	0	0	0	N/A	1	N/A	N/A	1

BIT 0 nDIRECTION
Active low status indicating the direction of head movement. A logic "0" indicating inward direction a logic "1" outward.

BIT 1 WRITE PROTECT
Active high status of the WRITE PROTECT disk interface input. A logic "1" indicating that the disk is write protected.

BIT 2 INDEX
Active high status of the INDEX disk interface input.

BIT 3 nHEAD SELECT
Active low status of the HDSEL disk interface input. A logic "0" selects side 1 and a logic "1" selects side 0.

BIT 4 TRACK 0
Active high status of the TRK0 disk interface input.

BIT 5 STEP
Active high status of the latched STEP disk interface output pin. This bit is latched with the STEP output going active, and is cleared with a read from the DIR register, or with a hardware or software reset.

BIT 6 DMA REQUEST
Active high status of the DRQ output pin.

BIT 7 INTERRUPT PENDING
Active high bit indicating the state of the Floppy Disk Interrupt output.

Downloaded from Arrow.com.

STATUS REGISTER B (SRB)

Address F1 READ ONLY

This register is read-only and monitors the state of several disk interface pins, in PS/2 and Model 30 modes. The SRB can be accessed at any time when in PS/2 mode. In the PC/AT mode the data bus pins D0 - D7 are held in a high impedance state for a read of address 3F1.

PS/2 Mode

	7	6	5	4	3	2	1	0
	1	1	DRIVE SEL0	WDATA TOGGLE	RDATA TOGGLE	WGATE	MOT EN1	MOT EN0
RESET COND.	1	1	0	0	0	0	0	0

BIT 0 MOTOR ENABLE 0

Active high status of the MTR0 disk interface output pin. This bit is low after a hardware reset and unaffected by a software reset.

BIT 1 MOTOR ENABLE 1

Active high status of the MTR1 disk interface output pin. This bit is low after a hardware reset and unaffected by a software reset.

BIT 2 WRITE GATE

Active high status of the WGATE disk interface output.

BIT 3 READ DATA TOGGLE

Every inactive edge of the RDATA input causes this bit to change state.

BIT 4 WRITE DATA TOGGLE

Every inactive edge of the WDATA input causes this bit to change state.

BIT 5 DRIVE SELECT 0

Reflects the status of the Drive Select 0 bit of the DOR (address 3F2 bit 0). This bit is cleared after a hardware reset, it is unaffected by a software reset.

BIT 6 RESERVED

Always read as a logic "1".

BIT 7 RESERVED

Always read as a logic "1".

Downloaded from Arrow.com.

PS/2 Model 30 Mode

	7	6	5	4	3	2	1	0
	nDRV2	nDS1	nDS0	WDATA F/F	RDATA F/F	WGATE F/F	nDS3	nDS2
RESET COND.	N/A	1	1	0	0	0	1	1

BIT 0 nDRIVE SELECT 2
Active low status of the DS2 disk interface output.

BIT 1 nDRIVE SELECT 3
Active low status of the DS3 disk interface output.

BIT 2 WRITE GATE
Active high status of the latched WGATE output signal. This bit is latched by the active going edge of WGATE and is cleared by the read of the DIR register.

BIT 3 READ DATA
Active high status of the latched RDATA output signal. This bit is latched by the inactive going edge of RDATA and is cleared by the read of the DIR register.

BIT 4 WRITE DATA
Active high status of the latched WDATA output signal. This bit is latched by the inactive going edge of WDATA and is cleared by the read of the DIR register. This bit is not gated with WGATE.

BIT 5 nDRIVE SELECT 0
Active low status of the DS0 disk interface output.

BIT 6 nDRIVE SELECT 1
Active low status of the DS1 disk interface output.

BIT 7 nDRV2
Active low status of the DRV2 disk interface input.

Downloaded from Arrow.com.

DIGITAL OUTPUT REGISTER (DOR)

Address 3F2 READ/WRITE

The DOR controls the drive select and motor enables of the disk interface outputs. It also contains the enable for the DMA logic and contains a software reset bit. The contents of the DOR are unaffected by a software reset. The DOR can be written to at any time.

	7	6	5	4	3	2	1	0
	MOT EN3	MOT EN2	MOT EN1	MOT EN0	DMAEN	nRESET	DRIVE SEL1	DRIVE SEL0
RESET COND.	0	0	0	0	0	0	0	0

BIT 0 and 1 DRIVE SELECT

These two bit a are binary encoded for the four drive selects DS0-DS3, thereby allowing only one drive to be selected at one time.

BIT 2 nRESET

A logic "0" written to this bit resets the Floppy disk controller. This reset will remain active until a logic "1" is written to this bit. This software reset does not affect the DSR and CCR registers, nor does it affect the other bits of the DOR register. The minimum reset duration required is 100ns, therefore toggling this bit by consecutive writes to this register is a valid method of issuing a software reset.

BIT 3 DMAEN

PC/AT and Model 30 Mode:

Writing this bit to logic "1" will enable the DRQ, nDACK, TC and FINTR outputs. This bit being a logic "0" will disable the nDACK and TC inputs, and hold the DRQ and FINTR outputs in a high impedance state. This bit is a logic "0" after a reset and in these modes.

PS/2 Mode: In this mode the DRQ, nDACK, TC and FINTR pins are always enabled. During a reset, the DRQ, nDACK, TC, and FINTR pins will remain enabled, but this bit will be cleared to a logic "0".

BIT 4 MOTOR ENABLE 0

This bit controls the MTR0 disk interface output. A logic "1" in this bit will cause the output pin to go active.

BIT 5 MOTOR ENABLE 1

This bit controls the MTR1 disk interface output. A logic "1" in this bit will cause the output pin to go active.

BIT 6 MOTOR ENABLE 2

This bit controls the MTR2 disk interface output. A logic "1" in this bit will cause the output pin to go active.

BIT 7 MOTOR ENABLE 3

This bit controls the MTR3 disk interface output. A logic "1" in this bit causes the output to go active.

Table 3 - Drive Activation Values

DRIVE	DOR VALUE
0	1CH
1	2DH
2	4EH
3	8FH

Downloaded from Arrow.com.

TAPE DRIVE REGISTER (TDR)

Address 3F3 READ/WRITE

This register is included for 82077 software compatability. The robust digital data separator used in the FDC37C669 does not require its characteristics modified for tape support. The contents of this register are not used internal to the device. The TDR is unaffected by a software reset. Bits 2-7 are tri-stated when read in this mode.

Table 4- Tape Select Bits

TAPE SEL1	TAPE SEL2	DRIVE SELECTED
0	0	None
0	1	1
1	0	2
1	1	3

Table 5 - Internal 4 Drive Decode - Normal

DIGITAL OUTPUT REGISTER						DRIVE SELECT OUTPUTS (ACTIVE LOW)				MOTOR ON OUTPUTS (ACTIVE LOW)			
Bit 7	Bit 6	Bit 5	Bit 4	Bit1	Bit 0	nDS3	nDS2	nDS1	nDS0	nMTR3	nMTR2	nMTR1	nMTR0
X	X	X	1	0	0	1	1	1	0	nBIT 7	nBIT 6	nBIT 5	nBIT 4
X	X	1	X	0	1	1	1	0	1	nBIT 7	nBIT 6	nBIT 5	nBIT 4
X	1	X	X	1	0	1	0	1	1	nBIT 7	nBIT 6	nBIT 5	nBIT 4
1	X	X	X	1	1	0	1	1	1	nBIT 7	nBIT 6	nBIT 5	nBIT 4
0	0	0	0	X	X	1	1	1	1	nBIT 7	nBIT 6	nBIT 5	nBIT 4

Table 6 - Internal 4 Drive Decode - Drives 0 and 1 Swapped

DIGITAL OUTPUT REGISTER						DRIVE SELECT OUTPUTS (ACTIVE LOW)				MOTOR ON OUTPUTS (ACTIVE LOW)			
Bit 7	Bit 6	Bit 5	Bit 4	Bit1	Bit 0	nDS3	nDS2	nDS1	nDS0	nMTR3	nMTR2	nMTR1	nMTR0
X	X	X	1	0	0	1	1	0	1	nBIT 7	nBIT 6	nBIT 4	nBIT 5
X	X	1	X	0	1	1	1	1	0	nBIT 7	nBIT 6	nBIT 4	nBIT 5
X	1	X	X	1	0	1	0	1	1	nBIT 7	nBIT 6	nBIT 4	nBIT 5
1	X	X	X	1	1	0	1	1	1	nBIT 7	nBIT 6	nBIT 4	nBIT 5
0	0	0	0	X	X	1	1	1	1	nBIT 7	nBIT 6	nBIT 4	nBIT 5

Downloaded from Arrow.com.

Table 7 - External 2 to 4 Drive Decode - Normal

DIGITAL OUTPUT REGISTER						DRIVE SELECT OUTPUTS (ACTIVE LOW)		MOTOR ON OUTPUTS (ACTIVE LOW)	
Bit 7	Bit 6	Bit 5	Bit 4	Bit1	Bit 0	nDS1	nDS0	nMTR1	nMTR0
X	X	X	1	0	0	0	0	1	0
X	X	1	X	0	1	0	1	1	0
X	1	X	X	1	0	1	0	1	0
1	X	X	X	1	1	1	1	1	0
X	X	X	0	0	0	0	0	1	1
X	X	0	X	0	1	0	1	1	1
X	0	X	X	1	0	1	0	1	1
0	X	X	X	1	1	1	1	1	1

Table 8 - External 2 to 4 Drive Decode - Drives 0 and 1 Swapped

DIGITAL OUTPUT REGISTER						DRIVE SELECT OUTPUTS (ACTIVE LOW)		MOTOR ON OUTPUTS (ACTIVE LOW)	
Bit 7	Bit 6	Bit 5	Bit 4	Bit1	Bit 0	nDS1	nDS0	nMTR1	nMTR0
X	X	X	1	0	0	0	1	1	0
X	X	1	X	0	1	0	0	1	0
X	1	X	X	1	0	1	0	1	0
1	X	X	X	1	1	1	1	1	0
X	X	X	0	0	0	0	1	1	1
X	X	0	X	0	1	0	0	1	1
X	0	X	X	1	0	1	0	1	1
0	X	X	X	1	1	1	1	1	1

Downloaded from Arrow.com.

Normal Floppy Mode

Normal mode. Register 3F3 contains only bits 0 and 1. When this register is read, bits 2 - 7 are a high impedance.

	DB7	DB6	DB5	DB4	DB3	DB2	DB1	DB0
REG 3F3	Tri-state	Tri-state	Tri-state	Tri-state	Tri-state	Tri-state	tape sel1	tape sel0

Enhanced Floppy Mode 2 (OS2)

Register 3F3 for Enhanced Floppy Mode 2 operation.

	DB7	DB6	DB5	DB4	DB3	DB2	DB1	DB0
REG 3F3	Reserved	Reserved	Drive Type ID		Floppy Boot Drive		tape sel1	tape sel0

For this mode, DRATE0 and DRATE1 pins are inputs, and these inputs are gated into bits 6 and 7 of the 3F3 register. These two bits are not affected by a hard or soft reset.

BIT 7 Reserved

BIT 6 Reserved

BITS 5 and 4 Drive Type ID - These Bits reflect two of the bits of configuration register 6.

Which two bits depends on the last drive selected in the Digital Output Register (3F2). (See Table 11)

BITS 3 and 2 Floppy Boot Drive - These bits reflect the value of configuration register 7 bits 1, 0. Bit 3 = CR7 Bit DB1. Bit 2 = CR7 Bit DB0.

Bits 1 and 0 - Tape Drive Select (READ/WRITE). Same as in Normal and Enhanced Floppy Mode. 1.

Table 9 - Drive Type ID

Digital Output Register		**Register 3F3 - Drive Type ID**	
Bit 1	Bit 0	Bit 5	Bit 4
0	0	CR6 - Bit 1	CR6 - Bit 0
0	1	CR6 - Bit 3	CR6 - Bit 2
1	0	CR6 - Bit 5	CR6 - Bit 4
1	1	CR6 - Bit 7	CR6 - Bit 6

Downloaded from Arrow.com.

DATA RATE SELECT REGISTER (DSR)

Address 3F4 WRITE ONLY

This register is write only. It is used to program the data rate, amount of write precompensation, power down status, and software reset. The data rate is programmed using the Configuration Control Register (CCR) not the DSR, for PC/AT and PS/2 Model 30 and Microchannel applications. Other applications can set the data rate in the DSR. The data rate of the floppy controller is the most recent write of either the DSR or CCR. The DSR is unaffected by a software reset. A hardware reset will set the DSR to 02H, which corresponds to the default precompensation setting and 250 kbps.

	7	6	5	4	3	2	1	0
	S/W RESET	POWER DOWN	0	PRE-COMP2	PRE-COMP1	PRE-COMP0	DRATE SEL1	DRATE SEL0
RESET COND.	0	0	0	0	0	0	1	0

BIT 0 and 1 DATA RATE SELECT

These bits control the data rate of the floppy controller. See Table 13 for the settings corresponding to the individual data rates. The data rate select bits are unaffected by a software reset, and are set to 250 kbps after a hardware reset.

BIT 2 through 4 PRECOMPENSATION SELECT

These three bits select the value of write precompensation that will be applied to the WDATA output signal. Table 12 shows the precompensation values for the combination of these bits settings. Track 0 is the default starting track number to start precompensation. this starting track number can be changed by the configure command.

BIT 5 UNDEFINED

Should be written as a logic "0".

BIT 6 LOW POWER

A logic "1" written to this bit will put the floppy controller into Manual Low Power mode. The floppy controller clock and data separator circuits will be turned off. The controller will come out of manual low power mode after a software reset or access to the Data Register or Main Status Register.

BIT 7 SOFTWARE RESET

This active high bit has the same function as the DOR RESET (DOR bit 2) except that this bit is self clearing.

Table 10 - Precompensation Delays

PRECOMP 432	PRECOMPENSATION DELAY
111	0.00 ns-DISABLED
001	41.67 ns
010	83.34 ns
011	125.00 ns
100	166.67 ns
101	208.33 ns
110	250.00 ns
000	Default (See Table 14)

Downloaded from Arrow.com.

Table 11 - Data Rates

DRIVE RATE		DATA RATE		DATA RATE		DENSEL (1)		DRATE (2)	
DRT1	DRT0	SEL1	SEL0	MFM	FM	IDENT=1	IDENT=0	1	2
0	0	1	1	1Meg	---	1	0	1	1
0	0	0	0	500	250	1	0	0	0
0	0	0	1	300	150	0	1	0	1
0	0	1	0	250	125	0	1	1	0
0	1	1	1	1Meg	---	1	0	1	1
0	1	0	0	500	250	1	0	0	0
0	1	0	1	500	250	0	1	0	1
0	1	1	0	250	125	0	1	1	0
1	0	1	1	1Meg	---	1	0	1	1
1	0	0	0	500	250	1	0	0	0
1	0	0	1	2Meg	---	0	1	0	1
1	0	1	0	250	125	0	1	1	0

Drive Rate Table (Recommended) 00 = 360K, 1.2M, 720K, 1.44M and 2.88M Vertical Format
01 = 3-Mode Drive
10 = 2 Meg Tape

Note 1: This is for DENSEL in normal mode.
Note 2: This is for DRATE0, DRATE1 when Drive Opt are 00.

Table 12 - Default Precompensation Delays

DATA RATE	PRECOMPENSATION DELAYS
2 Mbps	125 ns
1 Mbps	41.67 ns
500 Kbps	125 ns
300 Kbps	125 ns
250 Kbps	125 ns

*The 2 Mbps data rate is only available if V_{CC} = 5V.

Downloaded from Arrow.com.

MAIN STATUS REGISTER

Address 3F4 READ ONLY

The Main Status Register is a read-only register and indicates the status of the disk controller. The Main Status Register can be read at any time. The MSR indicates when the disk controller is ready to receive data via the Data Register. It should be read before each byte transferring to or from the data register except in DMA mode. NO delay is required when reading the MSR after a data transfer.

7	6	5	4	3	2	1	0
RQM	DIO	NON DMA	CMD BUSY	DRV3 BUSY	DRV2 BUSY	DRV1 BUSY	DRV0 BUSY

BIT 0 - 3 DRV x BUSY

These bits are set to 1s when a drive is in the seek portion of a command, including implied and overlapped seeks and recalibrates.

BIT 4 COMMAND BUSY

This bit is set to a 1 when a command is in progress. This bit will go active after the command byte has been accepted and goes inactive at the end of the results phase. If there is no result phase (Seek, Recalibrate commands), this bit is returned to a 0 after the last command byte.

BIT 5 NON-DMA

This mode is selected in the SPECIFY command and will be set to a 1 during the execution phase of a command. This is for polled data transfers and helps differentiate between the data transfer phase and the reading of result bytes.

BIT 6 DIO

Indicates the direction of a data transfer once a RQM is set. A 1 indicates a read and a 0 indicates a write is required.

BIT 7 RQM

Indicates that the host can transfer data if set to a 1. No access is permitted if set to a 0.

Downloaded from Arrow.com.

DATA REGISTER (FIFO)

Address 3F5 READ/WRITE

All command parameter information, disk data and result status are transferred between the host processor and the floppy disk controller through the Data Register.

Data transfers are governed by the RQM and DIO bits in the Main Status Register.

The Data Register defaults to FIFO disabled mode after any form of reset. This maintains PC/AT hardware compatibility. The default values can be changed through the Configure command (enable full FIFO operation with threshold control). The advantage of the FIFO is that it allows the system a larger DMA latency without causing a disk error. Table 15 gives several examples of the delays with a FIFO. The data is based upon the following formula:

$$\text{Threshold \# x } \frac{1}{\text{DATA RATE}} \text{ -1.5 µs = DELAY}$$

At the start of a command, the FIFO action is always disabled and command parameters must be sent based upon the RQM and DIO bit settings. As the command execution phase is entered, the FIFO is cleared of any data to ensure that invalid data is not transferred.

An overrun or underrun will terminate the current command and the transfer of data. Disk writes will complete the current sector by generating a 00 pattern and valid CRC. Reads require the host to remove the remaining data so that the result phase may be entered.

Table 13- FIFO Service Delay

FIFO THRESHOLD EXAMPLES	MAXIMUM DELAY TO SERVICING AT 2 Mbps* DATA RATE
1 byte	1 x 4 µs - 1.5 µs = 2.5 µs
2 bytes	2 x 4 µs - 1.5 µs = 6.5 µs
8 bytes	8 x 4 µs - 1.5 µs = 30.5 µs
15 bytes	15 x 4 µs - 1.5 µs = 58.5 µs

FIFO THRESHOLD EXAMPLES	MAXIMUM DELAY TO SERVICING AT 1 Mbps DATA RATE
1 byte	1 x 8 µs - 1.5 µs = 6.5 µs
2 bytes	2 x 8 µs - 1.5 µs = 14.5 µs
8 bytes	8 x 8 µs - 1.5 µs = 62.5 µs
15 bytes	15 x 8 µs - 1.5 µs = 118.5 µs

FIFO THRESHOLD EXAMPLES	MAXIMUM DELAY TO SERVICING AT 500 Kbps DATA RATE
1 byte	1 x 16 µs - 1.5 µs = 14.5 µs
2 bytes	2 x 16 µs - 1.5 µs = 30.5 µs
8 bytes	8 x 16 µs - 1.5 µs = 126.5 µs
15 bytes	15 x 16 µs - 1.5 µs = 238.5 µs

*The 2 Mbps data rate is only available if V_{CC} = 5V.

Downloaded from Arrow.com.

DIGITAL INPUT REGISTER (DIR)

Address 3F7 READ ONLY
This register is read-only in all modes.

PC-AT Mode

	7	6	5	4	3	2	1	0
	DSK CHG							
RESET COND.	N/A	N/A	N/A	N/A	N/A	N/A	N/A	N/A

BIT 0 - 6 UNDEFINED
The data bus outputs D0 - 6 will remain in a high impedance state during a read of this register.

BIT 7 DSKCHG
This bit monitors the pin of the same name and reflects the opposite value seen on the disk cable.

PS/2 Mode

	7	6	5	4	3	2	1	0
	DSK CHG	1	1	1	1	DRATE SEL1	DRATE SEL0	HIGH DENS
RESET COND.	N/A	N/A	N/A	N/A	N/A	N/A	N/A	1

BIT 0 nHIGH DENS
This bit is low whenever the 500 Kbps or 1 Mbps data rates are selected, and high when 250 Kbps and 300 Kbps are selected.

BITS 1 - 2 DATA RATE SELECT
These bits control the data rate of the floppy controller. See Table 13 for the settings corresponding to the individual data rates. The data rate select bits are unaffected by a software reset, and are set to 250 Kbps after a hardware reset.

BITS 3 - 6 UNDEFINED
Always read as a logic "1"

BIT 7 DSKCHG
This bit monitors the pin of the same name and reflects the opposite value seen on the disk cable.

Downloaded from Arrow.com.

Model 30 Mode

	7	6	5	4	3	2	1	0
	DSK CHG	0	0	0	DMAEN	NOPREC	DRATE SEL1	DRATE SEL0
RESET COND.	N/A	0	0	0	0	0	1	0

BITS 0 - 1 DATA RATE SELECT
These bits control the data rate of the floppy controller. See Table 13 for the settings corresponding to the individual data rates. The data rate select bits are unaffected by a software reset, and are set to 250kb/s after a hardware reset.

BIT 2 NOPREC
This bit reflects the value of NOPREC bit set in the CCR register.

BIT 3 DMAEN
This bit reflects the value of DMAEN bit set in the DOR register bit 3.

BITS 4 - 6 UNDEFINED
Always read as a logic "0"

BIT 7 DSKCHG
This bit monitors the pin of the same name and reflects the opposite value seen on the pin.

Downloaded from Arrow.com.

CONFIGURATION CONTROL REGISTER (CCR)

Address 3F7 WRITE ONLY

PC/AT and PS/2 Modes

	7	6	5	4	3	2	1	0
							DRATE SEL1	DRATE SEL0
RESET COND.	N/A	N/A	N/A	N/A	N/A	N/A	1	0

BIT 0 and 1 DATA RATE SELECT 0 and 1
These bits determine the data rate of the floppy controller. See Table 13 for the appropriate values.

BIT 2 - 7 RESERVED
Should be set to a logical "0"

PS/2 Model 30 Mode

	7	6	5	4	3	2	1	0
						NOPREC	DRATE SEL1	DRATE SEL0
RESET COND.	N/A	N/A	N/A	N/A	N/A	N/A	1	0

BIT 0 and 1 DATA RATE SELECT 0 and 1
These bits determine the data rate of the floppy controller. See Table 13 for the appropriate values.

BIT 2 NO PRECOMPENSATION
This bit can be set by software, but it has no functionality. It can be read by bit 2 of the DSR when in Model 30 register mode. Unaffected by software reset.

BIT 3 - 7 RESERVED
Should be set to a logical "0"

Table 13 shows the state of the DENSEL pin. The DENSEL pin is set high after a hardware reset and is unaffected by the DOR and the DSR resets.

Downloaded from Arrow.com.

STATUS REGISTER ENCODING

During the Result Phase of certain commands, the Data Register contains data bytes that give the status of the command just executed.

Table 14 - Status Register 0

BIT NO.	SYMBOL	NAME	DESCRIPTION
7,6	IC	Interrupt Code	00 - Normal termination of command. The specified command was properly executed and completed without error. 01 - Abnormal termination of command. Command execution was started, but was not successfully completed. 10 - Invalid command. The requested command could not be executed. 11 - Abnormal termination caused by Polling.
5	SE	Seek End	The FDC completed a Seek, Relative Seek or Recalibrate command (used during a Sense Interrupt Command).
4	EC	Equipment Check	The TRK0 pin failed to become a "1" after: 1. 80 step pulses in the Recalibrate command. 2. The Relative Seek command caused the FDC to step outward beyond Track 0.
3			Unused. This bit is always "0".
2	H	Head Address	The current head address.
1,0	DS1,0	Drive Select	The current selected drive.

Downloaded from Arrow.com.

Table 15 - Status Register 1

BIT NO.	SYMBOL	NAME	DESCRIPTION
7	EN	End of Cylinder	The FDC tried to access a sector beyond the final sector of the track (255D). Will be set if TC is not issued after Read or Write Data command.
6			Unused. This bit is always "0".
5	DE	Data Error	The FDC detected a CRC error in either the ID field or the data field of a sector.
4	OR	Overrun/ Underrun	Becomes set if the FDC does not receive CPU or DMA service within the required time interval, resulting in data overrun or underrun.
3			Unused. This bit is always "0".
2	ND	No Data	Any one of the following: 1. Read Data, Read Deleted Data command - the FDC did not find the specified sector. 2. Read ID command - the FDC cannot read the ID field without an error. 3. Read A Track command - the FDC cannot find the proper sector sequence.
1	NW	Not Writeable	WP pin became a "1" while the FDC is executing a Write Data, Write Deleted Data, or Format A Track command.
0	MA	Missing Address Mark	Any one of the following: 1. The FDC did not detect an ID address mark at the specified track after encountering the index pulse from the IDX pin twice. 2. The FDC cannot detect a data address mark or a deleted data address mark on the specified track.

Downloaded from Arrow.com.

Table 16 - Status Register 2

BIT NO.	SYMBOL	NAME	DESCRIPTION
7			Unused. This bit is always "0".
6	CM	Control Mark	Any one of the following: 1. Read Data command - the FDC encountered a deleted data address mark. 2. Read Deleted Data command - the FDC encountered a data address mark.
5	DD	Data Error in Data Field	The FDC detected a CRC error in the data field.
4	WC	Wrong Cylinder	The track address from the sector ID field is different from the track address maintained inside the FDC.
3			Unused. This bit is always "0".
2			Unused. This bit is always "0".
1	BC	Bad Cylinder	The track address from the sector ID field is different from the track address maintained inside the FDC and is equal to FF hex, which indicates a bad track with a hard error according to the IBM soft-sectored format.
0	MD	Missing Data Address Mark	The FDC cannot detect a data address mark or a deleted data address mark.

Downloaded from Arrow.com.

Table 17 - Status Register 3

BIT NO.	SYMBOL	NAME	DESCRIPTION
7			Unused. This bit is always "0".
6	WP	Write Protected	Indicates the status of the WP pin.
5			Unused. This bit is always "1".
4	T0	Track 0	Indicates the status of the TRK0 pin.
3			Unused. This bit is always "1".
2	HD	Head Address	Indicates the status of the HDSEL pin.
1,0	DS1,0	Drive Select	Indicates the status of the DS1, DS0 pins.

RESET

There are three sources of system reset on the FDC: The RESET pin of the FDC37C669, a reset generated via a bit in the DOR, and a reset generated via a bit in the DSR. At power on, a Power On Reset initializes the FDC. All resets take the FDC out of the power down state.

All operations are terminated upon a RESET, and the FDC enters an idle state. A reset while a disk write is in progress will corrupt the data and CRC.

On exiting the reset state, various internal registers are cleared, including the Configure command information, and the FDC waits for a new command. Drive polling will start unless disabled by a new Configure command.

RESET Pin (Hardware Reset)

The RESET pin is a global reset and clears all registers except those programmed by the Specify command. The DOR reset bit is enabled and must be cleared by the host to exit the reset state.

DOR Reset vs. DSR Reset (Software Reset)

These two resets are functionally the same. Both will reset the FDC core, which affects drive status information and the FIFO circuits. The DSR reset clears itself automatically while the DOR reset requires the host to manually clear it. DOR reset has precedence over the DSR reset. The DOR reset is set automatically upon a pin reset. The user must manually clear this reset bit in the DOR to exit the reset state.

MODES OF OPERATION

The FDC has three modes of operation, PC/AT mode, PS/2 mode and Model 30 mode. These are determined by the state of the IDENT and MFM bits 6 and 5 respectively of configuration register 3.

PC/AT mode - (IDENT high, MFM a "don't care")

The PC/AT register set is enabled, the DMA enable bit of the DOR becomes valid (FINTR and DRQ can be hi Z), and TC and DENSEL become active high signals.

Downloaded from Arrow.com.

PS/2 mode - (IDENT low, MFM high)
This mode supports the PS/2 models 50/60/80 configuration and register set. The DMA bit of the DOR becomes a "don't care", (FINTR and DRQ are always valid), TC and DENSEL become active low.

Model 30 mode - (IDENT low, MFM low)
This mode supports PS/2 Model 30 configuration and register set. The DMA enable bit of ther DOR becomes valid (FINTR and DRQ can be hi Z), TC is active high and DENSEL is active low.

DMA TRANSFERS

DMA transfers are enabled with the Specify command and are initiated by the FDC by activating the FDRQ pin during a data transfer command. The FIFO is enabled directly by asserting nDACK and addresses need not be valid.

Note that if the DMA controller (i.e. 8237A) is programmed to function in verify mode, a pseudo read is performed by the FDC based only on nDACK. This mode is only available when the FDC has been configured into byte mode (FIFO disabled) and is programmed to do a read. With the FIFO enabled, the FDC can perform the above operation by using the new Verify command; no DMA operation is needed.

CONTROLLER PHASES

For simplicity, command handling in the FDC can be divided into three phases: Command, Execution, and Result. Each phase is described in the following sections.

Command Phase

After a reset, the FDC enters the command phase and is ready to accept a command from the host. For each of the commands, a defined set of command code bytes and parameter bytes has to be written to the FDC before the command phase is complete. (Please refer to Table 18 for the command set descriptions). These bytes of data must be transferred in the order prescribed.

Before writing to the FDC, the host must examine the RQM and DIO bits of the Main Status Register. RQM and DIO must be equal to "1" and "0" respectively before command bytes may be written. RQM is set false by the FDC after each write cycle until the received byte is processed. The FDC asserts RQM again to request each parameter byte of the command unless an illegal command condition is detected. After the last parameter byte is received, RQM remains "0" and the FDC automatically enters the next phase as defined by the command definition.

The FIFO is disabled during the command phase to provide for the proper handling of the "Invalid Command" condition.

Execution Phase

All data transfers to or from the FDC occur during the execution phase, which can proceed in DMA or non-DMA mode as indicated in the Specify command.

After a reset, the FIFO is disabled. Each data byte is transferred by an FINT or FDRQ depending on the DMA mode. The Configure command can enable the FIFO and set the FIFO threshold value.

The following paragraphs detail the operation of the FIFO flow control. In these descriptions, <threshold> is defined as the number of bytes available to the FDC when service is requested from the host and ranges from 1 to 16. The parameter FIFOTHR, which the user programs, is one less and ranges from 0 to 15.

Downloaded from Arrow.com.

A low threshold value (i.e. 2) results in longer periods of time between service requests, but requires faster servicing of the request for both read and write cases. The host reads (writes) from (to) the FIFO until empty (full), then the transfer request goes inactive. The host must be very responsive to the service request. This is the desired case for use with a "fast" system.

A high value of threshold (i.e. 12) is used with a "sluggish" system by affording a long latency period after a service request, but results in more frequent service requests.

Non-DMA Mode - Transfers from the FIFO to the Host

The FINT pin and RQM bits in the Main Status Register are activated when the FIFO contains (16-<threshold>) bytes or the last bytes of a full sector have been placed in the FIFO. The FINT pin can be used for interrupt-driven systems, and RQM can be used for polled systems. The host must respond to the request by reading data from the FIFO. This process is repeated until the last byte is transferred out of the FIFO. The FDC will deactivate the FINT pin and RQM bit when the FIFO becomes empty.

Non-DMA Mode - Transfers from the Host to the FIFO

The FINT pin and RQM bit in the Main Status Register are activated upon entering the execution phase of data transfer commands. The host must respond to the request by writing data into the FIFO. The FINT pin and RQM bit remain true until the FIFO becomes full. They are set true again when the FIFO has <threshold> bytes remaining in the FIFO. The FINT pin will also be deactivated if TC and nDACK both go inactive. The FDC enters the result phase after the last byte is taken by the FDC from the FIFO (i.e. FIFO empty condition).

DMA Mode - Transfers from the FIFO to the Host

The FDC activates the DDRQ pin when the FIFO contains (16 - <threshold>) bytes, or the last byte of a full sector transfer has been placed in the FIFO. The DMA controller must respond to the request by reading data from the FIFO. The FDC will deactivate the DDRQ pin when the FIFO becomes empty. FDRQ goes inactive after nDACK goes active for the last byte of a data transfer (or on the active edge of nIOR, on the last byte, if no edge is present on nDACK). A data underrun may occur if FDRQ is not removed in time to prevent an unwanted cycle.

DMA Mode - Transfers from the Host to the FIFO

The FDC activates the FDRQ pin when entering the execution phase of the data transfer commands. The DMA controller must respond by activating the nDACK and nIOW pins and placing data in the FIFO. FDRQ remains active until the FIFO becomes full. FDRQ is again set true when the FIFO has <threshold> bytes remaining in the FIFO. The FDC will also deactivate the FDRQ pin when TC becomes true (qualified by nDACK), indicating that no more data is required. FDRQ goes inactive after nDACK goes active for the last byte of a data transfer (or on the active edge of nIOW of the last byte, if no edge is present on nDACK). A data overrun may occur if FDRQ is not removed in time to prevent an unwanted cycle.

Data Transfer Termination

The FDC supports terminal count explicitly through the TC pin and implicitly through the underrun/overrun and end-of-track (EOT) functions. For full sector transfers, the EOT parameter can define the last sector to be transferred in a single or multi-sector transfer.

Downloaded from Arrow.com.

If the last sector to be transferred is a partial sector, the host can stop transferring the data in mid-sector, and the FDC will continue to complete the sector as if a hardware TC was received. The only difference between these implicit functions and TC is that they return "abnormal termination" result status. Such status indications can be ignored if they were expected.

Note that when the host is sending data to the FIFO of the FDC, the internal sector count will be complete when the FDC reads the last byte from its side of the FIFO. There may be a delay in the removal of the transfer request signal of up to the time taken for the FDC to read the last 16 bytes from the FIFO. The host must tolerate this delay.

Result Phase

The generation of FINT determines the beginning of the result phase. For each of the commands, a defined set of result bytes has to be read from the FDC before the result phase is complete. These bytes of data must be read out for another command to start.

RQM and DIO must both equal "1" before the result bytes may be read. After all the result bytes have been read, the RQM and DIO bits switch to "1" and "0" respectively, and the CB bit is cleared, indicating that the FDC is ready to accept the next command.

Downloaded from Arrow.com.

COMMAND SET/DESCRIPTIONS

Commands can be written whenever the FDC is in the command phase. Each command has a unique set of needed parameters and status results. The FDC checks to see that the first byte is a valid command and, if valid, proceeds with the command. If it is invalid, an interrupt is issued. The user sends a Sense Interrupt Status command which returns an invalid command error. Refer to Table 18 or explanations of the various symbols used. Table 19 lists the required parameters and the results associated with each command that the FDC is capable of performing.

Table 18 - Description of Command Symbols

SYMBOL	NAME	DESCRIPTION
C	Cylinder Address	The currently selected address; 0 to 255.
D	Data Pattern	The pattern to be written in each sector data field during formatting.
D0, D1, D2, D3	Drive Select 0-3	Designates which drives are perpendicular drives on the Perpendicular Mode Command. A "1" indicates a perpendicular drive.
DIR	Direction Control	If this bit is 0, then the head will step out from the spindle during a relative seek. If set to a 1, the head will step in toward the spindle.
DS0, DS1	Disk Drive Select	**DS1 DS0 DRIVE** 0 0 drive 0 0 1 drive 1 1 0 drive 2 1 1 drive 3
DTL	Special Sector Size	By setting N to zero (00), DTL may be used to control the number of bytes transferred in disk read/write commands. The sector size (N = 0) is set to 128. If the actual sector (on the diskette) is larger than DTL, the remainder of the actual sector is read but is not passed to the host during read commands; during write commands, the remainder of the actual sector is written with all zero bytes. The CRC check code is calculated with the actual sector. When N is not zero, DTL has no meaning and should be set to FF HEX.
EC	Enable Count	When this bit is "1" the "DTL" parameter of the Verify command becomes SC (number of sectors per track).
EFIFO	Enable FIFO	This active low bit when a 0, enables the FIFO. A "1" disables the FIFO (default).
EIS	Enable Implied Seek	When set, a seek operation will be performed before executing any read or write command that requires the C parameter in the command phase. A "0" disables the implied seek.
EOT	End of Track	The final sector number of the current track.
GAP		Alters Gap 2 length when using Perpendicular Mode.

Downloaded from Arrow.com.

Table 18 - Description of Command Symbols

SYMBOL	NAME	DESCRIPTION
GPL	Gap Length	The Gap 3 size. (Gap 3 is the space between sectors excluding the VCO synchronization field).
H/HDS	Head Address	Selected head: 0 or 1 (disk side 0 or 1) as encoded in the sector ID field.
HLT	Head Load Time	The time interval that FDC waits after loading the head and before initializing a read or write operation. Refer to the Specify command for actual delays.
HUT	Head Unload Time	The time interval from the end of the execution phase (of a read or write command) until the head is unloaded. Refer to the Specify command for actual delays.
LOCK		Lock defines whether EFIFO, FIFOTHR, and PRETRK parameters of the CONFIGURE COMMAND can be reset to their default values by a "Software Reset". (A reset caused by writing to the appropriate bits of either the DSR or DOR)
MFM	MFM/FM Mode Selector	A one selects the double density (MFM) mode. A zero selects single density (FM) mode.
MT	Multi-Track Selector	When set, this flag selects the multi-track operating mode. In this mode, the FDC treats a complete cylinder under head 0 and 1 as a single track. The FDC operates as this expanded track started at the first sector under head 0 and ended at the last sector under head 1. With this flag set, a multitrack read or write operation will automatically continue to the first sector under head 1 when the FDC finishes operating on the last sector under head 0.
N	Sector Size Code	This specifies the number of bytes in a sector. If this parameter is "00", then the sector size is 128 bytes. The number of bytes transferred is determined by the DTL parameter. Otherwise the sector size is (2 raised to the "N'th" power) times 128. All values up to "07" hex are allowable. "07"h would equal a sector size of 16k. It is the user's responsibility to not select combinations that are not possible with the drive. **N** — **SECTOR SIZE** 00 — 128 bytes 01 — 256 bytes 02 — 512 bytes 03 — 1024 bytes .. — … 07 — 16 kbytes

Downloaded from Arrow.com.

Table 18 - Description of Command Symbols

SYMBOL	NAME	DESCRIPTION
NCN	New Cylinder Number	The desired cylinder number.
ND	Non-DMA Mode Flag	When set to 1, indicates that the FDC is to operate in the non-DMA mode. In this mode, the host is interrupted for each data transfer. When set to 0, the FDC operates in DMA mode, interfacing to a DMA controller by means of the DRQ and nDACK signals.
OW	Overwrite	The bits D0-D3 of the Perpendicular Mode Command can only be modified if OW is set to 1. OW id defined in the Lock command.
PCN	Present Cylinder Number	The current position of the head at the completion of Sense Interrupt Status command.
POLL	Polling Disable	When set, the internal polling routine is disabled. When clear, polling is enabled.
PRETRK	Precompensation Start Track Number	Programmable from track 00 to FFH.
R	Sector Address	The sector number to be read or written. In multi-sector transfers, this parameter specifies the sector number of the first sector to be read or written.
RCN	Relative Cylinder Number	Relative cylinder offset from present cylinder as used by the Relative Seek command.
SC	Number of Sectors Per Track	The number of sectors per track to be initialized by the Format command. The number of sectors per track to be verified during a Verify command when EC is set.
SK	Skip Flag	When set to 1, sectors containing a deleted data address mark will automatically be skipped during the execution of Read Data. If Read Deleted is executed, only sectors with a deleted address mark will be accessed. When set to "0", the sector is read or written the same as the read and write commands.
SRT	Step Rate Interval	The time interval between step pulses issued by the FDC. Programmable from 0.5 to 8 milliseconds in increments of 0.5 ms at the 1 Mbit data rate. Refer to the SPECIFY command for actual delays.
ST0 ST1 ST2 ST3	Status 0 Status 1 Status 2 Status 3	Registers within the FDC which store status information after a command has been executed. This status information is available to the host during the result phase after command execution.
WGATE	Write Gate	Alters timing of WE to allow for pre-erase loads in perpendicular drives.

Downloaded from Arrow.com.

INSTRUCTION SET

Table 19 - Instruction Set

READ DATA										
PHASE	R/W	DATA BUS								REMARKS
		D7	D6	D5	D4	D3	D2	D1	D0	
Command	W	MT	MFM	SK	0	0	1	1	0	Command Codes
	W	0	0	0	0	0	HDS	DS1	DS0	
	W	C								Sector ID information prior to Command execution.
	W	H								
	W	R								
	W	N								
	W	EOT								
	W	GPL								
	W	DTL								
Execution										Data transfer between the FDD and system.
Result	R	ST0								Status information after Command execution.
	R	ST1								
	R	ST2								
	R	C								Sector ID information after Command execution.
	R	H								
	R	R								
	R	N								

Downloaded from Arrow.com.

READ DELETED DATA										
PHASE	R/W	DATA BUS								REMARKS
		D7	D6	D5	D4	D3	D2	D1	D0	
Command	W	MT	MFM	SK	0	1	1	0	0	Command Codes
	W	0	0	0	0	0	HDS	DS1	DS0	
	W	C								Sector ID information prior to Command execution.
	W	H								
	W	R								
	W	N								
	W	EOT								
	W	GPL								
	W	DTL								
Execution										Data transfer between the FDD and system.
Result	R	ST0								Status information after Command execution.
	R	ST1								
	R	ST2								
	R	C								Sector ID information after Command execution.
	R	H								
	R	R								
	R	N								

Downloaded from Arrow.com.

WRITE DATA										
PHASE	R/W	DATA BUS								REMARKS
		D7	D6	D5	D4	D3	D2	D1	D0	
Command	W	MT	MFM	0	0	0	1	0	1	Command Codes
	W	0	0	0	0	0	HDS	DS1	DS0	
	W	C								Sector ID information prior to Command execution.
	W	H								
	W	R								
	W	N								
	W	EOT								
	W	GPL								
	W	DTL								
Execution										Data transfer between the FDD and system.
Result	R	ST0								Status information after Command execution.
	R	ST1								
	R	ST2								
	R	C								Sector ID information after Command execution.
	R	H								
	R	R								
	R	N								

Downloaded from Arrow.com.

WRITE DELETED DATA										
PHASE	R/W	DATA BUS								REMARKS
		D7	D6	D5	D4	D3	D2	D1	D0	
Command	W	MT	MFM	0	0	1	0	0	1	Command Codes
	W	0	0	0	0	0	HDS	DS1	DS0	
	W	C								Sector ID information prior to Command execution.
	W	H								
	W	R								
	W	N								
	W	EOT								
	W	GPL								
	W	DTL								
Execution										Data transfer between the FDD and system.
Result	R	ST0								Status information after Command execution.
	R	ST1								
	R	ST2								
	R	C								Sector ID information after Command execution.
	R	H								
	R	R								
	R	N								

Downloaded from Arrow.com.

READ A TRACK										
PHASE	R/W	DATA BUS								REMARKS
		D7	D6	D5	D4	D3	D2	D1	D0	
Command	W	0	MFM	0	0	0	0	1	0	Command Codes
	W	0	0	0	0	0	HDS	DS1	DS0	
	W	C								Sector ID information prior to Command execution.
	W	H								
	W	R								
	W	N								
	W	EOT								
	W	GPL								
	W	DTL								
Execution										Data transfer between the FDD and system. FDC reads all of cylinders' contents from index hole to EOT.
Result	R	ST0								Status information after Command execution.
	R	ST1								
	R	ST2								
	R	C								Sector ID information after Command execution.
	R	H								
	R	R								
	R	N								

Downloaded from Arrow.com.

VERIFY										
PHASE	R/W	DATA BUS								REMARKS
		D7	D6	D5	D4	D3	D2	D1	D0	
Command	W	MT	MFM	SK	1	0	1	1	0	Command Codes
	W	EC	0	0	0	0	HDS	DS1	DS0	
	W	C								Sector ID information prior to Command execution.
	W	H								
	W	R								
	W	N								
	W	EOT								
	W	GPL								
	W	DTL/SC								
Execution										No data transfer takes place.
Result	R	ST0								Status information after Command execution.
	R	ST1								
	R	ST2								
	R	C								Sector ID information after Command execution.
	R	H								
	R	R								
	R	N								

VERSION										
PHASE	R/W	DATA BUS								REMARKS
		D7	D6	D5	D4	D3	D2	D1	D0	
Command	W	0	0	0	1	0	0	0	0	Command Code
Result	R	1	0	0	1	0	0	0	0	Enhanced Controller

Downloaded from Arrow.com.

FORMAT A TRACK										
PHASE	R/W	DATA BUS								REMARKS
		D7	D6	D5	D4	D3	D2	D1	D0	
Command	W	0	MFM	0	0	1	1	0	1	Command Codes
	W	0	0	0	0	0	HDS	DS1	DS0	
	W	N								Bytes/Sector
	W	SC								Sectors/Cylinder
	W	GPL								Gap 3
	W	D								Filler Byte
Execution for Each Sector Repeat:	W	C								Input Sector Parameters
	W	H								
	W	R								
	W	N								
										FDC formats an entire cylinder
Result	R	ST0								Status information after Command execution
	R	ST1								
	R	ST2								
	R	Undefined								
	R	Undefined								
	R	Undefined								
	R	Undefined								

Downloaded from Arrow.com.

RECALIBRATE										
PHASE	R/W	DATA BUS								REMARKS
		D7	D6	D5	D4	D3	D2	D1	D0	
Command	W	0	0	0	0	0	1	1	1	Command Codes
	W	0	0	0	0	0	0	DS1	DS0	
Execution										Head retracted to Track 0 Interrupt.

SENSE INTERRUPT STATUS										
PHASE	R/W	DATA BUS								REMARKS
		D7	D6	D5	D4	D3	D2	D1	D0	
Command	W	0	0	0	0	1	0	0	0	Command Codes
Result	R	——— ST0 ———								Status information at the end of each seek operation.
	R	——— PCN ———								

SPECIFY										
PHASE	R/W	DATA BUS								REMARKS
		D7	D6	D5	D4	D3	D2	D1	D0	
Command	W	0	0	0	0	0	0	1	1	Command Codes
	W	—— SRT ——				—— HUT ——				
	W	——— HLT ———							ND	

Downloaded from Arrow.com.

SENSE DRIVE STATUS										
PHASE	R/W	DATA BUS								REMARKS
		D7	D6	D5	D4	D3	D2	D1	D0	
Command	W	0	0	0	0	0	1	0	0	Command Codes
	W	0	0	0	0	0	HDS	DS1	DS0	
Result	R	——— ST3 ———								Status information about FDD

SEEK										
PHASE	R/W	DATA BUS								REMARKS
		D7	D6	D5	D4	D3	D2	D1	D0	
Command	W	0	0	0	0	1	1	1	1	Command Codes
	W	0	0	0	0	0	HDS	DS1	DS0	
	W	——— NCN ———								
Execution										Head positioned over proper cylinder on diskette.

CONFIGURE										
PHASE	R/W	DATA BUS								REMARKS
		D7	D6	D5	D4	D3	D2	D1	D0	
Command	W	0	0	0	1	0	0	1	1	Configure Information
	W	0	0	0	0	0	0	0	0	
	W	0	EIS	EFIFO	POLL	—— FIFOTHR ——				
Execution	W	——— PRETRK ———								

Downloaded from Arrow.com.

RELATIVE SEEK										
PHASE	R/W	DATA BUS								REMARKS
		D7	D6	D5	D4	D3	D2	D1	D0	
Command	W	1	DIR	0	0	1	1	1	1	
	W	0	0	0	0	0	HDS	DS1	DS0	
	W	——— RCN ———								

DUMPREG										
PHASE	R/W	DATA BUS								REMARKS
		D7	D6	D5	D4	D3	D2	D1	D0	
Command	W	0	0	0	0	1	1	1	0	*Note: Registers placed in FIFO
Execution										
Result	R	——— PCN-Drive 0 ———								
	R	——— PCN-Drive 1 ———								
	R	——— PCN-Drive 2 ———								
	R	——— PCN-Drive 3 ———								
	R	—— SRT ——				|	—— HUT ——			
	R	——— HLT ———							| ND	
	R	——— SC/EOT ———								
	R	LOCK	0	D3	D2	D1	D0	GAP	WGATE	
	R	0	EIS	EFIFO	POLL	|	— FIFOTHR —			
	R	——— PRETRK ———								

Downloaded from Arrow.com.

READ ID										
PHASE	R/W	DATA BUS								REMARKS
		D7	D6	D5	D4	D3	D2	D1	D0	
Command	W	0	MFM	0	0	1	0	1	0	Commands
	W	0	0	0	0	0	HDS	DS1	DS0	
Execution										The first correct ID information on the Cylinder is stored in Data Register
Result	R	ST0								Status information after Command execution.
										Disk status after the Command has completed
	R	ST1								
	R	ST2								
	R	C								
	R	H								
	R	R								
	R	N								

Downloaded from Arrow.com.

PERPENDICULAR MODE										
PHASE	R/W	DATA BUS								REMARKS
		D7	D6	D5	D4	D3	D2	D1	D0	
Command	W	0	0	0	1	0	0	1	0	Command Codes
		OW	0	D3	D2	D1	D0	GAP	WGATE	

INVALID CODES										
PHASE	R/W	DATA BUS								REMARKS
		D7	D6	D5	D4	D3	D2	D1	D0	
Command	W	——— Invalid Codes ———								Invalid Command Codes (No Op - FDC37C669 goes into Standby State)
Result	R	———— ST0 ————								ST0 = 80H

LOCK										
PHASE	R/W	DATA BUS								REMARKS
		D7	D6	D5	D4	D3	D2	D1	D0	
Command	W	LOCK	0	0	1	0	1	0	0	Command Codes
Result	R	0	0	0	LOCK	0	0	0	0	

SC is returned if the last command that was issued was the Format command. EOT is returned if the last command was a Read or Write.

NOTE: These bits are used internally only. They are not reflected in the Drive Select pins. It is the user's responsibility to maintain correspondence between these bits and the Drive Select pins (DOR).

Downloaded from Arrow.com.

DATA TRANSFER COMMANDS

All of the Read Data, Write Data and Verify type commands use the same parameter bytes and return the same results information, the only difference being the coding of bits 0-4 in the first byte.

An implied seek will be executed if the feature was enabled by the Configure command. This seek is completely transparent to the user. The Drive Busy bit for the drive will go active in the Main Status Register during the seek portion of the command. If the seek portion fails, it will be reflected in the results status normally returned for a Read/Write Data command. Status Register 0 (ST0) would contain the error code and C would contain the cylinder on which the seek failed.

Read Data

A set of nine (9) bytes is required to place the FDC in the Read Data Mode. After the Read Data command has been issued, the FDC loads the head (if it is in the unloaded state), waits the specified head settling time (defined in the Specify command), and begins reading ID Address Marks and ID fields. When the sector address read off the diskette matches with the sector address specified in the command, the FDC reads the sector's data field and transfers the data to the FIFO.

After completion of the read operation from the current sector, the sector address is incremented by one and the data from the next logical sector is read and output via the FIFO. This continuous read function is called "Multi-Sector Read Operation". Upon receipt of TC, or an implied TC (FIFO overrun/underrun), the FDC stops sending data but will continue to read data from the current sector, check the CRC bytes, and at the end of the sector, terminate the Read Data Command.

N determines the number of bytes per sector (see Table 22 below). If N is set to zero, the sector size is set to 128. The DTL value determines the number of bytes to be transferred. If DTL is less than 128, the FDC transfers the specified number of bytes to the host. For reads, it continues to read the entire 128-byte sector and checks for CRC errors. For writes, it completes the 128-byte sector by filling in zeros. If N is not set to 00 Hex, DTL should be set to FF Hex and has no impact on the number of bytes transferred.

Table 20 - Sector Sizes

N	SECTOR SIZE
00	128 bytes
01	256 bytes
02	512 bytes
03	1024 bytes
..	...
07	16 Kbytes

The amount of data which can be handled with a single command to the FDC depends upon MT (multi-track) and N (number of bytes/sector).

The Multi-Track function (MT) allows the FDC to read data from both sides of the diskette. For a particular cylinder, data will be transferred starting at Sector 1, Side 0 and completing the last sector of the same track at Side 1.

If the host terminates a read or write operation in the FDC, the ID information in the result phase is dependent upon the state of the MT bit and EOT byte. Refer to Table 23.

At the completion of the Read Data command, the head is not unloaded until after the Head Unload Time Interval (specified in the Specify command) has elapsed. If the host issues another command before the head unloads, then the head settling time may be saved between subsequent reads.

If the FDC detects a pulse on the nINDEX pin twice without finding the specified sector (meaning that the diskette's index hole passes through index detect logic in the drive twice), the FDC sets the IC code in Status

Downloaded from Arrow.com.

Register 0 to "01" indicating abnormal termination, sets the ND bit in Status Register 1 to "1" indicating a sector not found, and terminates the Read Data Command.

After reading the ID and Data Fields in each sector, the FDC checks the CRC bytes. If a CRC error occurs in the ID or data field, the FDC sets the IC code in Status Register 0 to "01" indicating abnormal termination, sets the DE bit flag in Status Register 1 to "1", sets the DD bit in Status Register 2 to "1" if CRC is incorrect in the ID field, and terminates the Read Data Command. Table 22 describes the effect of the SK bit on the Read Data command execution and results. Except where noted in Table 22, the C or R value of the sector address is automatically incremented (see Table 24).

Table 21 - Effects of MT and N Bits

MT	N	MAXIMUM TRANSFER CAPACITY	FINAL SECTOR READ FROM DISK
0	1	256 x 26 = 6,656	26 at side 0 or 1
1	1	256 x 52 = 13,312	26 at side 1
0	2	512 x 15 = 7,680	15 at side 0 or 1
1	2	512 x 30 = 15,360	15 at side 1
0	3	1024 x 8 = 8,192	8 at side 0 or 1
1	3	1024 x 16 = 16,384	16 at side 1

Table 22 - Skip Bit vs Read Data Command

SK BIT VALUE	DATA ADDRESS MARK TYPE ENCOUNTERED	RESULTS		
		SECTOR READ?	CM BIT OF ST2 SET?	DESCRIPTION OF RESULTS
0	Normal Data	Yes	No	Normal termination.
0	Deleted Data	Yes	Yes	Address not incremented. Next sector not searched for.
1	Normal Data	Yes	No	Normal termination.
1	Deleted Data	No	Yes	Normal termination. Sector not read ("skipped").

Downloaded from Arrow.com.

Read Deleted Data

This command is the same as the Read Data command, only it operates on sectors that contain a Deleted Data Address Mark at the beginning of a Data Field.

Table 25 describes the effect of the SK bit on the Read Deleted Data command execution and results.

Except where noted in Table 25, the C or R value of the sector address is automatically incremented (see Table 26).

Table 23 - Skip Bit vs. Read Deleted Data Command

SK BIT VALUE	DATA ADDRESS MARK TYPE ENCOUNTERED	RESULTS		
		SECTOR READ?	CM BIT OF ST2 SET?	DESCRIPTION OF RESULTS
0	Normal Data	Yes	Yes	Address not incremented. Next sector not searched for.
0	Deleted Data	Yes	No	Normal termination.
1	Normal Data	No	Yes	Normal termination. Sector not read ("skipped").
1	Deleted Data	Yes	No	Normal termination.

Read A Track

This command is similar to the Read Data command except that the entire data field is read continuously from each of the sectors of a track. Immediately after encountering a pulse on the nINDEX pin, the FDC starts to read all data fields on the track as continuous blocks of data without regard to logical sector numbers. If the FDC finds an error in the ID or DATA CRC check bytes, it continues to read data from the track and sets the appropriate error bits at the end of the command. The FDC compares the ID information read from each sector with the specified value in the command and sets the ND flag of Status Register 1 to a "1" if there is no comparison. Multi-track or skip operations are not allowed with this command. The MT and SK bits (bits D7 and D5 of the first command byte respectively) should always be set to "0".

This command terminates when the EOT specified number of sectors has not been read. If the FDC does not find an ID Address Mark on the diskette after the second occurrence of a pulse on the IDX pin, then it sets the IC code in Status Register 0 to "01" (abnormal termination), sets the MA bit in Status Register 1 to "1", and terminates the command.

Downloaded from Arrow.com.

Table 24 - Result Phase Table

MT	HEAD	FINAL SECTOR TRANSFERRED TO HOST	ID INFORMATION AT RESULT PHASE			
			C	H	R	N
0	0	Less than EOT	NC	NC	R + 1	NC
		Equal to EOT	C + 1	NC	01	NC
	1	Less than EOT	NC	NC	R + 1	NC
		Equal to EOT	C + 1	NC	01	NC
1	0	Less than EOT	NC	NC	R + 1	NC
		Equal to EOT	NC	LSB	01	NC
	1	Less than EOT	NC	NC	R + 1	NC
		Equal to EOT	C + 1	LSB	01	NC

NC: No Change, the same value as the one at the beginning of command execution.
LSB: Least Significant Bit, the LSB of H is complemented.

Write Data

After the Write Data command has been issued, the FDC loads the head (if it is in the unloaded state), waits the specified head load time if unloaded (defined in the Specify command), and begins reading ID fields. When the sector address read from the diskette matches the sector address specified in the command, the FDC reads the data from the host via the FIFO and writes it to the sector's data field.

After writing data into the current sector, the FDC computes the CRC value and writes it into the CRC field at the end of the sector transfer. The Sector Number stored in "R" is incremented by one, and the FDC continues writing to the next data field. The FDC continues this "Multi-Sector Write Operation". Upon receipt of a terminal count signal or if a FIFO over/under run occurs while a data field is being written, then the remainder of the data field is filled with zeros.

The FDC reads the ID field of each sector and checks the CRC bytes. If it detects a CRC error in one of the ID fields, it sets the IC code in Status Register 0 to "01" (abnormal termination), sets the DE bit of Status Register 1 to "1", and terminates the Write Data command.

The Write Data command operates in much the same manner as the Read Data command. The following items are the same. Please refer to the Read Data Command for details:

! Transfer Capacity
! EN (End of Cylinder) bit
! ND (No Data) bit
! Head Load, Unload Time Interval
! ID information when the host terminates the command
! Definition of DTL when N = 0 and when N does not = 0

Write Deleted Data

This command is almost the same as the Write Data command except that a Deleted Data Address Mark is written at the beginning of the Data Field instead of the normal Data Address Mark. This command is typically used to mark a bad sector containing an error on the floppy disk.

Verify

Downloaded from Arrow.com.

The Verify command is used to verify the data stored on a disk. This command acts exactly like a Read Data command except that no data is transferred to the host. Data is read from the disk and CRC is computed and checked against the previously-stored value.

Because data is not transferred to the host, TC (pin 25) cannot be used to terminate this command. By setting the EC bit to "1", an implicit TC will be issued to the FDC. This implicit TC will occur when the SC value has decremented to 0 (an SC value of 0 will verify 256 sectors). This command can also be terminated by setting the EC bit to "0" and the EOT value equal to the final sector to be checked. If EC is set to "0", DTL/SC should be programmed to 0FFH. Refer to Table 26 and Table 27 for information concerning the values of MT and EC versus SC and EOT value.

Definitions:

Sectors Per Side = Number of formatted sectors per each side of the disk.

Sectors Remaining = Number of formatted sectors left which can be read, including side 1 of the disk if MT is set to "1".

Table 25 - Verify Command Result Phase Table

MT	EC	SC/EOT VALUE	TERMINATION RESULT
0	0	SC = DTL EOT ≤ # Sectors Per Side	Success Termination Result Phase Valid
0	0	SC = DTL EOT > # Sectors Per Side	Unsuccessful Termination Result Phase Invalid
0	1	SC ≤ # Sectors Remaining AND EOT ≤ # Sectors Per Side	Successful Termination Result Phase Valid
0	1	SC > # Sectors Remaining OR EOT > # Sectors Per Side	Unsuccessful Termination Result Phase Invalid
1	0	SC = DTL EOT ≤ # Sectors Per Side	Successful Termination Result Phase Valid
1	0	SC = DTL EOT > # Sectors Per Side	Unsuccessful Termination Result Phase Invalid
1	1	SC ≤ # Sectors Remaining AND EOT ≤ # Sectors Per Side	Successful Termination Result Phase Valid
1	1	SC > # Sectors Remaining OR EOT > # Sectors Per Side	Unsuccessful Termination Result Phase Invalid

NOTE: If MT is set to "1" and the SC value is greater than the number of remaining formatted sectors on Side 0, verifying will continue on Side 1 of the disk.

Downloaded from Arrow.com.

Format A Track

The Format command allows an entire track to be formatted. After a pulse from the IDX pin is detected, the FDC starts writing data on the disk including gaps, address marks, ID fields, and data fields per the IBM System 34 or 3740 format (MFM or FM respectively). The particular values that will be written to the gap and data field are controlled by the values programmed into N, SC, GPL, and D which are specified by the host during the command phase. The data field of the sector is filled with the data byte specified by D. The ID field for each sector is supplied by the host; that is, four data bytes per sector are needed by the FDC for C, H, R, and N (cylinder, head, sector number and sector size respectively).

After formatting each sector, the host must send new values for C, H, R and N to the FDC for the next sector on the track. The R value (sector number) is the only value that must be changed by the host after each sector is formatted. This allows the disk to be formatted with nonsequential sector addresses (interleaving). This incrementing and formatting continues for the whole track until the FDC encounters a pulse on the IDX pin again and it terminates the command.

Table 28 contains typical values for gap fields which are dependent upon the size of the sector and the number of sectors on each track. Actual values can vary due to drive electronics.

FORMAT FIELDS

SYSTEM 34 (DOUBLE DENSITY) FORMAT

GAP4a	SYNC	IAM		GAP1	SYNC	IDAM		CYL	HD	SEC	NO	CRC	GAP2	SYNC	DATA AM		DATA	CRC	GAP3	GAP 4b
80x 4E	12x 00	3x C2	FC	50x 4E	12x 00	3x A1	FE						22x 4E	12x 00	3x A1	FB F8				

SYSTEM 3740 (SINGLE DENSITY) FORMAT

GAP4a	SYNC	IAM	GAP1	SYNC	IDAM	CYL	HD	SEC	NO	CRC	GAP2	SYNC	DATA AM	DATA	CRC	GAP3	GAP 4b
40x FF	6x 00	FC	26x FF	6x 00	FE						11x FF	6x 00	FB or F8				

PERPENDICULAR FORMAT

GAP4a	SYNC	IAM		GAP1	SYNC	IDAM		CYL	HD	SEC	NO	CRC	GAP2	SYNC	DATA AM		DATA	CRC	GAP3	GAP 4b
80x 4E	12x 00	3x C2	FC	50x 4E	12x 00	3x A1	FE						41x 4E	12x 00	3x A1	FB F8				

Downloaded from Arrow.com.

Table 26 - Typical Values for Formatting

	FORMAT	SECTOR SIZE	N	SC	GPL1	GPL2
5.25" Drives	FM	128	00	12	07	09
		128	00	10	10	19
		512	02	08	18	30
		1024	03	04	46	87
		2048	04	02	C8	FF
		4096	05	01	C8	FF
		...	...			
	MFM	256	01	12	0A	0C
		256	01	10	20	32
		512*	02	09	2A	50
		1024	03	04	80	F0
		2048	04	02	C8	FF
		4096	05	01	C8	FF
		...	...			
3.5" Drives	FM	128	0	0F	07	1B
		256	1	09	0F	2A
		512	2	05	1B	3A
	MFM	256	1	0F	0E	36
		512**	2	09	1B	54
		1024	3	05	35	74

GPL1 = suggested GPL values in Read and Write commands to avoid splice point between data field and ID field of contiguous sections.
GPL2 = suggested GPL value in Format A Track command.
*PC/AT values (typical)
**PS/2 values (typical). Applies with 1.0 MB and 2.0 MB drives.
NOTE: All values except sector size are in hex.

Downloaded from Arrow.com.

CONTROL COMMANDS

Control commands differ from the other commands in that no data transfer takes place. Three commands generate an interrupt when complete: Read ID, Recalibrate, and Seek. The other control commands do not generate an interrupt.

Read ID

The Read ID command is used to find the present position of the recording heads. The FDC stores the values from the first ID field it is able to read into its registers. If the FDC does not find an ID address mark on the diskette after the second occurrence of a pulse on the nINDEX pin, it then sets the IC code in Status Register 0 to "01" (abnormal termination), sets the MA bit in Status Register 1 to "1", and terminates the command.

The following commands will generate an interrupt upon completion. They do not return any result bytes. It is highly recommended that control commands be followed by the Sense Interrupt Status command. Otherwise, valuable interrupt status information will be lost.

Recalibrate

This command causes the read/write head within the FDC to retract to the track 0 position. The FDC clears the contents of the PCN counter and checks the status of the nTR0 pin from the FDD. As long as the nTR0 pin is low, the DIR pin remains 0 and step pulses are issued. When the nTR0 pin goes high, the SE bit in Status Register 0 is set to "1" and the command is terminated. If the nTR0 pin is still low after 79 step pulses have been issued, the FDC sets the SE and the EC bits of Status Register 0 to "1" and terminates the command. Disks capable of handling more than 80 tracks per side may require more than one Recalibrate command to return the head back to physical Track 0.

The Recalibrate command does not have a result phase. The Sense Interrupt Status command must be issued after the Recalibrate command to effectively terminate it and to provide verification of the head position (PCN). During the command phase of the recalibrate operation, the FDC is in the BUSY state, but during the execution phase it is in a NON-BUSY state. At this time, another Recalibrate command may be issued, and in this manner parallel Recalibrate operations may be done on up to four drives at once.

Upon power up, the software must issue a Recalibrate command to properly initialize all drives and the controller.

Seek

The read/write head within the drive is moved from track to track under the control of the Seek command. The FDC compares the PCN, which is the current head position, with the NCN and performs the following operation if there is a difference:

PCN < NCN:	Direction signal to drive set to "1" (step in) and issues step pulses.
PCN > NCN:	Direction signal to drive set to "0" (step out) and issues step pulses.

The rate at which step pulses are issued is controlled by SRT (Stepping Rate Time) in the Specify command. After each step pulse is issued, NCN is compared against PCN, and when NCN = PCN the SE bit in Status Register 0 is set to "1" and the command is terminated.

During the command phase of the seek or recalibrate operation, the FDC is in the BUSY state, but during the execution phase it is in the NON-BUSY state. At this time, another Seek or Recalibrate command may be issued, and in this manner, parallel seek operations may be done on up to four drives at once.

Downloaded from Arrow.com.

Note that if implied seek is not enabled, the read and write commands should be preceded by:

1) Seek command - Step to the proper track
2) Sense Interrupt Status command - Terminate the Seek command
3) Read ID - Verify head is on proper track
4) Issue Read/Write command.

The Seek command does not have a result phase. Therefore, it is highly recommended that the Sense Interrupt Status command be issued after the Seek command to terminate it and to provide verification of the head position (PCN). The H bit (Head Address) in ST0 will always return to a "0". When exiting POWERDOWN mode, the FDC clears the PCN value and the status information to zero. Prior to issuing the POWERDOWN command, it is highly recommended that the user service all pending interrupts through the Sense Interrupt Status command.

Sense Interrupt Status

An interrupt signal on FINT pin is generated by the FDC for one of the following reasons:

1. Upon entering the Result Phase of:
   a. Read Data command
   b. Read A Track command
   c. Read ID command
   d. Read Deleted Data command
   e. Write Data command
   f. Format A Track command
   g. Write Deleted Data command
   h. Verify command
2. End of Seek, Relative Seek, or Recalibrate command
3. FDC requires a data transfer during the execution phase in the non-DMA mode

The Sense Interrupt Status command resets the interrupt signal and, via the IC code and SE bit of Status Register 0, identifies the cause of the interrupt.

SE	IC	INTERRUPT DUE TO
0	11	Polling
1	00	Normal termination of Seek or Recalibrate command
1	01	Abnormal termination of Seek or Recalibrate command

Table 27 - Interrupt Identification

The Seek, Relative Seek, and Recalibrate commands have no result phase. The Sense Interrupt Status command must be issued immediately after these commands to terminate them and to provide verification of the head position (PCN). The H (Head Address) bit in ST0 will always return a "0". If a Sense Interrupt Status is not issued, the drive will continue to be BUSY and may affect the operation of the next command.

Sense Drive Status

Sense Drive Status obtains drive status information. It has not execution phase and goes directly to the result phase from the command phase. Status Register 3 contains the drive status information.

Specify

The Specify command sets the initial values for each of the three internal times. The HUT (Head Unload Time) defines the time from the end of the execution phase of one of the read/write commands to the head unload state. The SRT (Step Rate Time) defines the time interval between adjacent step pulses. Note that the spacing between the first and second step pulses may be shorter than the remaining step pulses. The HLT (Head Load Time) defines the time between when the Head Load signal goes high and the read/write operation starts.

Downloaded from Arrow.com.

The values change with the data rate speed selection and are documented in Table 30. The values are the same for MFM and FM.

Table 28 - Drive Control Delays (ms)

	HUT					SRT				
	2M	**1M**	**500K**	**300K**	**250K**	**2M**	**1M**	**500K**	**300K**	**250K**
0	64	128	256	426	512	4	8	16	26.7	32
1	4	8	16	26.7	32	3.75	7.5	15	25	30
..	..	..	..	..	..	..	..	..	..	..
E	56	112	224	373	448	0.5	1	2	3.33	4
F	60	120	240	400	480	0.25	0.5	1	1.67	2

	HLT				
	2M	**1M**	**500K**	**300K**	**250K**
00	64	128	256	426	512
01	0.5	1	2	3.3	4
02	1	2	4	6.7	8
..	..	..	..	..	.
7F	63	126	252	420	504
7F	63.5	127	254	423	508

The choice of DMA or non-DMA operations is made by the ND bit. When this bit is "1", the non-DMA mode is selected, and when ND is "0", the DMA mode is selected. In DMA mode, data transfers are signaled by the FDRQ pin. Non-DMA mode uses the RQM bit and the FINT pin to signal data transfers.

Configure

The Configure command is issued to select the special features of the FDC. A Configure command need not be issued if the default values of the FDC meet the system requirements.

Configure Default Values:

EIS - No Implied Seeks
EFIFO - FIFO Disabled
POLL - Polling Enabled
FIFOTHR - FIFO Threshold Set to 1 Byte
PRETRK - Pre-Compensation Set to Track 0

EIS - Enable Implied Seek. When set to "1", the FDC will perform a Seek operation before executing a read or write command. Defaults to no implied seek.

EFIFO - A "1" disables the FIFO (default). This means data transfers are asked for on a byte-by-byte basis. Defaults to "1", FIFO disabled. The threshold defaults to "1".

POLL - Disable polling of the drives. Defaults to "0", polling enabled. When enabled, a single interrupt is generated after a reset. No polling is performed while the drive head is loaded and the head unload delay has not expired.

FIFOTHR - The FIFO threshold in the execution phase of read or write commands. This is programmable from 1 to 16 bytes. Defaults to one byte. A "00" selects one byte; "0F" selects 16 bytes.

Downloaded from Arrow.com.

PRETRK - Pre-Compensation Start Track Number. Programmable from track 0 to 255. Defaults to track 0. A "00" selects track 0; "FF" selects track 255.

Version

The Version command checks to see if the controller is an enhanced type or the older type (765A). A value of 90 H is returned as the result byte.

Relative Seek

The command is coded the same as for Seek, except for the MSB of the first byte and the DIR bit.

DIR Head Step Direction Control

DIR	ACTION
0	Step Head Out
1	Step Head In

RCN Relative Cylinder Number that determines how many tracks to step the head in or out from the current track number.

The Relative Seek command differs from the Seek command in that it steps the head the absolute number of tracks specified in the command instead of making a comparison against an internal register. The Seek command is good for drives that support a maximum of 256 tracks. Relative Seeks cannot be overlapped with other Relative Seeks. Only one Relative Seek can be active at a time. Relative Seeks may be overlapped with Seeks and Recalibrates. Bit 4 of Status Register 0 (EC) will be set if Relative Seek attempts to step outward beyond Track 0.

As an example, assume that a floppy drive has 300 useable tracks. The host needs to read track 300 and the head is on any track (0-255). If a Seek command is issued, the head will stop at track 255. If a Relative Seek command is issued, the FDC will move the head the specified number of tracks, regardless of the internal cylinder position register (but will increment the register). If the head was on track 40 (d), the maximum track that the FDC could position the head on using Relative Seek will be 295 (D), the initial track + 255 (D). The maximum count that the head can be moved with a single Relative Seek command is 255 (D).

The internal register, PCN, will overflow as the cylinder number crosses track 255 and will contain 39 (D). The resulting PCN value is thus (RCN + PCN) mod 256. Functionally, the FDC starts counting from 0 again as the track number goes above 255 (D). It is the user's responsibility to compensate FDC functions (precompensation track number) when accessing tracks greater than 255. The FDC does not keep track that it is working in an "extended track area" (greater than 255). Any command issued will use the current PCN value except for the Recalibrate command, which only looks for the TRACK0 signal. Recalibrate will return an error if the head is farther than 79 due to its limitation of issuing a maximum of 80 step pulses. The user simply needs to issue a second Recalibrate command. The Seek command and implied seeks will function correctly within the 44 (D) track (299-255) area of the "extended track area". It is the user's responsibility not to issue a new track position that will exceed the maximum track that is present in the extended area.

To return to the standard floppy range (0-255) of tracks, a Relative Seek should be issued to cross the track 255 boundary.

A Relative Seek can be used instead of the normal Seek, but the host is required to calculate the difference between the current head location and the new (target) head location. This may require the host to issue a Read ID command to ensure that the head is physically on the track that software assumes it to be. Different FDC commands will return different cylinder results which may be difficult to keep track of with software without the Read ID command.

Perpendicular Mode

The Perpendicular Mode command should be issued prior to executing Read/Write/Format commands that access a disk drive with perpendicular recording capability. With this command, the length of the Gap2 field and VCO enable timing can be altered to accommodate the unique requirements of these drives. Table 31 describes the effects of the WGATE and GAP bits for the Perpendicular Mode command. Upon a reset, the FDC will default to the conventional mode (WGATE = 0, GAP = 0).

Downloaded from Arrow.com.

Selection of the 500 Kbps and 1 Mbps perpendicular modes is independent of the actual data rate selected in the Data Rate Select Register. The user must ensure that these two data rates remain consistent.

The Gap2 and VCO timing requirements for perpendicular recording type drives are dictated by the design of the read/write head. In the design of this head, a pre-erase head precedes the normal read/write head by a distance of 200 micrometers. This works out to about 38 bytes at a 1 Mbps recording density. Whenever the write head is enabled by the Write Gate signal, the pre-erase head is also activated at the same time. Thus, when the write head is initially turned on, flux transitions recorded on the media for the first 38 bytes will not be preconditioned with the pre-erase head since it has not yet been activated. To accommodate this head activation and deactivation time, the Gap2 field is expanded to a length of 41 bytes. The format field shown on page 61 illustrates the change in the Gap2 field size for the perpendicular format.

On the read back by the FDC, the controller must begin synchronization at the beginning of the sync field. For the conventional mode, the internal PLL VCO is enabled (VCOEN) approximately 24 bytes from the start of the Gap2 field. But, when the controller operates in the 1 Mbps perpendicular mode (WGATE = 1, GAP = 1), VCOEN goes active after 43 bytes to accommodate the increased Gap2 field size. For both cases, and approximate two-byte cushion is maintained from the beginning of the sync field for the purposes of avoiding write splices in the presence of motor speed variation.

For the Write Data case, the FDC activates Write Gate at the beginning of the sync field under the conventional mode. The controller then writes a new sync field, data address mark, data field, and CRC as shown in Figure 4. With the pre-erase head of the perpendicular drive, the write head must be activated in the Gap2 field to insure a proper write of the new sync field. For the 1 Mbps perpendicular mode (WGATE = 1, GAP = 1), 38 bytes will be written in the Gap2 space. Since the bit density is proportional to the data rate, 19 bytes will be written in the Gap2 field for the 500 Kbps perpendicular mode (WGATE = 1, GAP =0).

It should be noted that none of the alterations in Gap2 size, VCO timing, or Write Gate timing affect normal program flow. The information provided here is just for background purposes and is not needed for normal operation. Once the Perpendicular Mode command is invoked, FDC software behavior from the user standpoint is unchanged.

The perpendicular mode command is enhanced to allow specific drives to be designated Perpendicular recording drives. This enhancement allows data transfers between Conventional and Perpendicular drives without having to issue Perpendicular mode commands between the accesses of the different drive types, nor having to change write pre-compensation values.
When both GAP and WGATE bits of the PERPENDICULAR MODE COMMAND are both programmed to "0" (Conventional mode), then D0, D1, D2, D3, and D4 can be programmed independently to "1" for that drive to be set automatically to Perpendicular mode. In this mode the following set of conditions also apply:

1. The GAP2 written to a perpendicular drive during a write operation will depend upon the programmed

Downloaded from Arrow.com.

data rate.

2. The write pre-compensation given to a perpendicular mode drive wil be 0ns.
3. For D0-D3 programmed to "0" for conventional mode drives any data written will be at the currently programmed write pre-compensation.

Note: Bits D0-D3 can only be overwritten when OW is programmed as a "1".
If either GAP or WGATE is a "1" then D0-D3 are ignored.

Software and hardware resets have the following effect on the PERPENDICULAR MODE COMMAND:

1. "Software" resets (via the DOR or DSR registers) will only clear GAP and WGATE bits to "0". D0-D3 are unaffected and retain their previous value.
2. "Hardware" resets will clear all bits (GAP, WGATE and D0-D3) to "0", i.e all conventional mode.

Table 29 - Effects of WGATE and GAP Bits

WGATE	GAP	MODE	LENGTH OF GAP2 FORMAT FIELD	PORTION OF GAP 2 WRITTEN BY WRITE DATA OPERATION
0	0	Conventional	22 Bytes	0 Bytes
0	1	Perpendicular (500 Kbps)	22 Bytes	19 Bytes
1	0	Reserved (Conventional)	22 Bytes	0 Bytes
1	1	Perpendicular (1 Mbps)	41 Bytes	38 Bytes

LOCK

In order to protect systems with long DMA latencies against older application software that can disable the FIFO the LOCK Command has been added. This command should only be used by the FDC routines, and application software should refrain from using it. If an application calls for the FIFO to be disabled then the CONFIGURE command should be used.

The LOCK command defines whether the EFIFO, FIFOTHR, and PRETRK parameters of the CONFIGURE command can be RESET by the DOR and DSR registers. When the LOCK bit is set to logic "1" all subsequent "software RESETS by the DOR and DSR registers will not change the previously set parameters to their default values. All "hardware" RESET from the RESET pin will set the LOCK bit to logic "0" and return the EFIFO, FIFOTHR, and PRETRK to

Downloaded from Arrow.com.

their default values. A status byte is returned immediately after issuing a LOCK command. This byte reflects the value of the LOCK bit set by the command byte.

ENHANCED DUMPREG

The DUMPREG command is designed to support system run-time diagnostics and application software development and debug. To accommodate the LOCK command and the enhanced PERPENDICULAR MODE command the eighth byte of the DUMPREG command has been modified to contain the additional data from these two commands.

COMPATIBILITY

The FDC37C669 was designed with software compatibility in mind. It is a fully backwards-compatible solution with the older generation 765A/B disk controllers. The FDC also implements on-board registers for compatibility with the PS/2, as well as PC/AT and PC/XT, floppy disk controller subsystems. After a hardware reset of the FDC, all registers, functions and enhancements default to a PC/AT, PS/2 or PS/2 Model 30 compatible operating mode, depending on how the IDENT and MFM bits are configured by the system bios.

Downloaded from Arrow.com.

PARALLEL PORT FLOPPY DISK CONTROLLER

In this mode, the Floppy Disk Control signals are available on the parallel port pins. When this mode is selected, the parallel port is not available. There are two modes of operation, PPFD1 and PPFD2. These modes can be selected in Configuration Register 4. PPFD1 has only drive 1 on the parallel port pins; PPFD2 has drive 0 and 1 on the parallel port pins.

PPFD1: Drive 0 is on the FDC pins
Drive 1 is on the Parallel port pins

PPFD2: Drive 0 is on the Parallel port pins
Drive 1 is on the Parallel port pins

When the PPFDC is selected the following pins are set as follows:

1. nDACK: Assigned to the parallel port device during configuration.
2. PDRQ (assigned to the parallel port): not ECP = high-Z, ECP & dmaEn = 0, ECP & not dmaEn = high-Z
3. IRQ assigned to the parallel port: not active, this is hi-Z or Low depending on settings.

The following parallel port pins are read as follows by a read of the parallel port register:

1. Data Register (read) = last Data Register (write)
2. Control Register are read as "cable not connected" STROBE, AUTOFD and SLC = 0 and nINIT = 1;
3. Status Register reads: nBUSY = 0, PE = 0, SLCT = 0, nACK = 1, nERR = 1.

The following FDC pins are all in the high impedence state when the PPFDC is actually selected by the drive select register:

1. nWDATA, DENSEL, nHDSEL, nWGATE, nDIR, nSTEP, nDS1, nDS0, nMTRO, nMTR1.

2. If PPFDx is selected, then the parallel port can not be used as a parallel port until "Normal" mode is selected.

The FDC signals are muxed onto the Parallel Port pins as shown in Table 32.

Downloaded from Arrow.com.

Table 30 - FDC Parallel Port Pins

CONNECTOR PIN #	CHIP PIN #	SPP MODE	PIN DIRECTION	FDC MODE	PIN DIRECTION
1	77	nSTB	I/O	(nDS0)	I/(0)
2	71	PD0	I/O	nINDEX	I
3	70	PD1	I/O	nTRKO	I
4	69	PD2	I/O	nWP	I
5	68	PD3	I/O	nRDATA	I
6	66	PD4	I/O	nDSKCHG	I
7	65	PD5	I/O	nMEDIA_ID0	I
8	64	PD6	I/O	(nMTR0)	I/(0)
9	63	PD7	I/O	nMEDIA_ID1	I
10	62	nACK	I	nDS1	0
11	61	BUSY	I	nMTR1	0
12	60	PE	I	nWDATA	0
13	59	SLCT	I	nWGATE	0
14	76	nAFD	I/O	nDENSEL	0
15	75	nERR	I	nHDSEL	0
16	74	nINIT	I/O	nDIR	0
17	73	nSLIN	I/O	nSTEP	0

These pins are outputs in mode PPFD2. Inputs in mode PPFD1

Downloaded from Arrow.com.

SERIAL PORT (UART)

The FDC37C669 incorporates two full function UARTs. They are compatible with the NS16450, the 16450 ACE registers and the NS16550A. The UARTs perform serial-to-parallel conversion on received characters and parallel-to-serial conversion on transmit characters. The data rates are independently programmable from 115.2K baud down to 50 baud. The character options are programmable for 1 start; 1, 1.5 or 2 stop bits; even, odd, sticky or no parity; and prioritized interrupts. The UARTs each contain a programmable baud rate generator that is capable of dividing the input clock or crystal by a number from 1 to 65535. The UARTs are also capable of supporting the MIDI data rate. Refer to the FDC37C669 Configuration Registers for information on disabling, power down and changing the base address of the UARTs. The interrupt from a UART is enabled by programming OUT2 of that UART to a logic "1". OUT2 being a logic "0" disables that UART's interrupt.

REGISTER DESCRIPTION

Addressing of the accessible registers of the Serial Port is shown below. The base addresses of the serial ports are defined by the configuration registers (see Configuration section). The Serial Port registers are located at sequentially increasing addresses above these base addresses. The FDC37C669 contains two serial ports, each of which contain a register set as described below.

Table 31 - Addressing the Serial Port

DLAB*	A2	A1	A0	REGISTER NAME
0	0	0	0	Receive Buffer (read)
0	0	0	0	Transmit Buffer (write)
0	0	0	1	Interrupt Enable (read/write)
X	0	1	0	Interrupt Identification (read)
X	0	1	0	FIFO Control (write)
X	0	1	1	Line Control (read/write)
X	1	0	0	Modem Control (read/write)
X	1	0	1	Line Status (read/write)
X	1	1	0	Modem Status (read/write)
X	1	1	1	Scratchpad (read/write)
1	0	0	0	Divisor LSB (read/write)
1	0	0	1	Divisor MSB (read/write)

*NOTE: DLAB is Bit 7 of the Line Control Register

Downloaded from Arrow.com.

The following section describes the operation of the registers.

RECEIVE BUFFER REGISTER (RB)
Address Offset = 0H, DLAB = 0, READ ONLY

This register holds the received incoming data byte. Bit 0 is the least significant bit, which is transmitted and received first. Received data is double buffered; this uses an additional shift register to receive the serial data stream and convert it to a parallel 8 bit word which is transferred to the Receive Buffer register. The shift register is not accessible.

TRANSMIT BUFFER REGISTER (TB)
Address Offset = 0H, DLAB = 0, WRITE ONLY

This register contains the data byte to be transmitted. The transmit buffer is double buffered, utilizing an additional shift register (not accessible) to convert the 8 bit data word to a serial format. This shift register is loaded from the Transmit Buffer when the transmission of the previous byte is complete.

INTERRUPT ENABLE REGISTER (IER)
Address Offset = 1H, DLAB = 0, READ/WRITE

The lower four bits of this register control the enables of the five interrupt sources of the Serial Port interrupt. It is possible to totally disable the interrupt system by resetting bits 0 through 3 of this register. Similarly, setting the appropriate bits of this register to a high, selected interrupts can be enabled. Disabling the interrupt system inhibits the Interrupt Identification Register and disables any Serial Port interrupt out of the FDC37C669. All other system functions operate in their normal manner, including the Line Status and MODEM Status Registers. The contents of the Interrupt Enable Register are described below.

Bit 0
This bit enables the Received Data Available Interrupt (and timeout interrupts in the FIFO mode) when set to logic "1".

Bit 1
This bit enables the Transmitter Holding Register Empty Interrupt when set to logic "1".

Bit 2
This bit enables the Received Line Status Interrupt when set to logic "1". The error sources causing the interrupt are Overrun, Parity, Framing and Break. The Line Status Register must be read to determine the source.

Bit 3
This bit enables the MODEM Status Interrupt when set to logic "1". This is caused when one of the Modem Status Register bits changes state.

Bits 4 through 7
These bits are always logic "0".

FIFO CONTROL REGISTER (FCR)
Address Offset = 2H, DLAB = X, WRITE

This is a write only register at the same location as the IIR. This register is used to enable and clear the FIFOs, set the RCVR FIFO trigger level. Note: DMA is not supported.

Bit 0
Setting this bit to a logic "1" enables both the XMIT and RCVR FIFOs. Clearing this bit to a logic "0" disables both the XMIT and RCVR FIFOs and clears all bytes from both FIFOs. When changing from FIFO Mode to non-FIFO (16450) mode, data is automatically cleared from the FIFOs. This bit must be a 1 when other bits in this register are written to or they will not be properly programmed.

Bit 1
Setting this bit to a logic "1" clears all bytes in the RCVR FIFO and resets its counter logic to 0. The shift register is not cleared. This bit is self-clearing.

Downloaded from Arrow.com.

Bit 2
Setting this bit to a logic "1" clears all bytes in the XMIT FIFO and resets its counter logic to 0. The shift register is not cleared. This bit is self-clearing.

Bit 3
Writing to this bit has no effect on the operation of the UART. The RXRDY and TXRDY pins are not available on this chip.

Bit 4,5
Reserved

Bit 6,7
These bits are used to set the trigger level for the RCVR FIFO interrupt.

INTERRUPT IDENTIFICATION REGISTER (IIR)

Bit 7	Bit 6	RCVR FIFO Trigger Level (BYTES)
0	0	1
0	1	4
1	0	8
1	1	14

Address Offset = 2H, DLAB = X, READ

By accessing this register, the host CPU can determine the highest priority interrupt and its source. Four levels of priority interrupt exist. They are in descending order of priority:

1. Receiver Line Status (highest priority)
2. Received Data Ready
3. Transmitter Holding Register Empty
4. MODEM Status (lowest priority)

Information indicating that a prioritized interrupt is pending and the source of that interrupt is stored in the Interrupt Identification Register (refer to Interrupt Control Table). When the CPU accesses the IIR, the Serial Port freezes all interrupts and indicates the highest priority pending interrupt to the CPU. During this CPU access, even if the Serial Port records new interrupts, the current indication does not change until access is completed. The contents of the IIR are described below.

Bit 0
This bit can be used in either a hardwired prioritized or polled environment to indicate whether an interrupt is pending. When bit 0 is a logic "0", an interrupt is pending and the contents of the IIR may be used as a pointer to the appropriate internal service routine. When bit 0 is a logic "1", no interrupt is pending.

Bits 1 and 2
These two bits of the IIR are used to identify the highest priority interrupt pending as indicated by the Interrupt Control Table.

Bit 3

In non-FIFO mode, this bit is a logic "0". In FIFO mode this bit is set along with bit 2 when a timeout interrupt is pending.

Bits 4 and 5
These bits of the IIR are always logic "0".

Bits 6 and 7
These two bits are set when the FIFO CONTROL Register bit 0 equals 1.

Downloaded from Arrow.com.

Table 32 - Interrupt Control Table

FIFO MODE ONLY	INTERRUPT IDENTIFICATION REGISTER			INTERRUPT SET AND RESET FUNCTIONS			
BIT 3	**BIT 2**	**BIT 1**	**BIT 0**	**PRIORITY LEVEL**	**INTERRUPT TYPE**	**INTERRUPT SOURCE**	**INTERRUPT RESET CONTROL**
0	0	0	1	-	None	None	-
0	1	1	0	Highest	Receiver Line Status	Overrun Error, Parity Error, Framing Error or Break Interrupt	Reading the Line Status Register
0	1	0	0	Second	Received Data Available	Receiver Data Available	Read Receiver Buffer or the FIFO drops below the trigger level.
1	1	0	0	Second	Character Timeout Indication	No Characters Have Been Removed From or Input to the RCVR FIFO during the last 4 Char times and there is at least 1 char in it during this time	Reading the Receiver Buffer Register
0	0	1	0	Third	Transmitter Holding Register Empty	Transmitter Holding Register Empty	Reading the IIR Register (if Source of Interrupt) or Writing the Transmitter Holding Register
0	0	0	0	Fourth	MODEM Status	Clear to Send or Data Set Ready or Ring Indicator or Data Carrier Detect	Reading the MODEM Status Register

Downloaded from Arrow.com.

LINE CONTROL REGISTER (LCR)
Address Offset = 3H, DLAB = 0, READ/WRITE

This register contains the format information of the serial line. The bit definitions are:

Bits 0 and 1
These two bits specify the number of bits in each transmitted or received serial character. The encoding of bits 0 and 1 is as follows:

BIT 1	BIT 0	WORD LENGTH
0	0	5 Bits
0	1	6 Bits
1	0	7 Bits
1	1	8 Bits

The Start, Stop and Parity bits are not included in the word length.

Bit 2
This bit specifies the number of stop bits in each transmitted or received serial character. The following table summarizes the information.

BIT 2	WORD LENGTH	NUMBER OF STOP BITS
0	--	1
1	5 bits	1.5
1	6 bits	2
1	7 bits	2
1	8 bits	2

Note: The receiver will ignore all stop bits beyond the first, regardless of the number used in transmitting.

Bit 3
Parity Enable bit. When bit 3 is a logic "1", a parity bit is generated (transmit data) or checked (receive data) between the last data word bit and the first stop bit of the serial data. (The parity bit is used to generate an even or odd number of 1s when the data word bits and the parity bit are summed).

Bit 4
Even Parity Select bit. When bit 3 is a logic "1" and bit 4 is a logic "0", an odd number of logic "1"'s is transmitted or checked in the data word bits and the parity bit. When bit 3 is a logic "1" and bit 4 is a logic "1" an even number of bits is transmitted and checked.

Bit 5
Stick Parity bit. When bit 3 is a logic "1" and bit 5 is a logic "1", the parity bit is transmitted and then detected by the receiver in the opposite state indicated by bit 4.

Bit 6
Set Break Control bit. When bit 6 is a logic "1", the transmit data output (TXD) is forced to the Spacing or logic "0" state and remains there (until reset by a low level bit 6) regardless of other transmitter activity. This feature enables the Serial Port to alert a terminal in a communications system.

Bit 7
Divisor Latch Access bit (DLAB). It must be set high (logic "1") to access the Divisor Latches of the Baud Rate Generator during read or write operations. It must be set low (logic "0") to access the Receiver Buffer Register, the Transmitter Holding Register, or the Interrupt Enable Register.

MODEM CONTROL REGISTER (MCR)
Address Offset = 4H, DLAB = X, READ/WRITE

This 8 bit register controls the interface with the MODEM or data set (or device emulating a MODEM). The contents of the MODEM control register are described below.

Downloaded from Arrow.com.

Bit 0
This bit controls the Data Terminal Ready (nDTR) output. When bit 0 is set to a logic "1", the nDTR output is forced to a logic "0". When bit 0 is a logic "0", the nDTR output is forced to a logic "1".

Bit 1
This bit controls the Request To Send (nRTS) output. Bit 1 affects the nRTS output in a manner identical to that described above for bit 0.

Bit 2
This bit controls the Output 1 (OUT1) bit. This bit does not have an output pin and can only be read or written by the CPU.

Bit 3
Output 2 (OUT2). This bit is used to enable an UART interrupt. When OUT2 is a logic "0", the serial port interrupt output is forced to a high impedance state - disabled. When OUT2 is a logic "1", the serial port interrupt outputs are enabled.

Bit 4
This bit provides the loopback feature for diagnostic testing of the Serial Port. When bit 4 is set to logic "1", the following occur:

1. The TXD is set to the Marking State(logic "1").
2. The receiver Serial Input (RXD) is disconnected.
3. The output of the Transmitter Shift Register is "looped back" into the Receiver Shift Register input.
4. All MODEM Control inputs (nCTS, nDSR, nRI and nDCD) are disconnected.
5. The four MODEM Control outputs (nDTR, nRTS, OUT1 and OUT2) are internally connected to the four MODEM Control inputs (nDSR, nCTS, RI and DCD) respectively.
6. The Modem Control output pins are forced inactive high.
7. Data that is transmitted is immediately received.

This feature allows the processor to verify the transmit and receive data paths of the Serial Port. In the diagnostic mode, the receiver and the transmitter interrupts are fully operational. The MODEM Control Interrupts are also operational but the interrupts' sources are now the lower four bits of the MODEM Control Register instead of the MODEM Control inputs. The interrupts are still controlled by the Interrupt Enable Register.

Bits 5 through 7
These bits are permanently set to logic zero.

LINE STATUS REGISTER (LSR)
Address Offset = 5H, DLAB = X, READ/WRITE

Bit 0
Data Ready (DR). It is set to a logic "1" whenever a complete incoming character has been received and transferred into the Receiver Buffer Register or the FIFO. Bit 0 is reset to a logic "0" by reading all of the data in the Receive Buffer Register or the FIFO.

Bit 1
Overrun Error (OE). Bit 1 indicates that data in the Receiver Buffer Register was not read before the next character was transferred into the register, thereby destroying the previous character. In FIFO mode, an overrunn error will occur only when the FIFO is full and the next character has been completely received in the shift register, the character in the shift register is overwritten but not transferred to the FIFO. The OE indicator is set to a logic "1" immediately upon detection of an overrun condition, and reset whenever the Line Status Register is read.

Bit 2
Parity Error (PE). Bit 2 indicates that the received data character does not have the correct even or odd parity, as selected by the even parity select bit. The PE is set to a logic "1" upon detection of a parity error and is reset to a logic "0" whenever the Line Status Register is read. In the FIFO mode this error is associated with the particular character in the FIFO it applies to. This error is indicated when the associated character is at the top of the FIFO.

Bit 3
Framing Error (FE). Bit 3 indicates that the received character did not have a valid stop bit. Bit 3 is set to a logic "1" whenever the stop bit following the last data bit

Downloaded from Arrow.com.

or parity bit is detected as a zero bit (Spacing level). The FE is reset to a logic "0" whenever the Line Status Register is read. In the FIFO mode this error is associated with the particular character in the FIFO it applies to. This error is indicated when the associated character is at the top of the FIFO. The Serial Port will try to resynchronize after a framing error. To do this, it assumes that the framing error was due to the next start bit, so it samples this 'start' bit twice and then takes in the 'data'.

Bit 4

Break Interrupt (BI). Bit 4 is set to a logic "1" whenever the received data input is held in the Spacing state (logic "0") for longer than a full word transmission time (that is, the total time of the start bit + data bits + parity bits + stop bits). The BI is reset after the CPU reads the contents of the Line Status Register. In the FIFO mode this error is associated with the particular character in the FIFO it applies to. This error is indicated when the associated character is at the top of the FIFO. When break occurs only one zero character is loaded into the FIFO. Restarting after a break is received, requires the serial data (RXD) to be logic "1" for at least 1/2 bit time.

Note: Bits 1 through 4 are the error conditions that produce a Receiver Line Status Interrupt whenever any of the corresponding conditions are detected and the interrupt is enabled.

Bit 5

Transmitter Holding Register Empty (THRE). Bit 5 indicates that the Serial Port is ready to accept a new character for transmission. In addition, this bit causes the Serial Port to issue an interrupt when the Transmitter Holding Register interrupt enable is set high. The THRE bit is set to a logic "1" when a character is transferred from the Transmitter Holding Register into the Transmitter Shift Register. The bit is reset to logic "0" whenever the CPU loads the Transmitter Holding Register. In the FIFO mode this bit is set when the XMIT FIFO is empty, it is cleared when at least 1 byte is written to the XMIT FIFO. Bit 5 is a read only bit.

Bit 6

Transmitter Empty (TEMT). Bit 6 is set to a logic "1" whenever the Transmitter Holding Register (THR) and Transmitter Shift Register (TSR) are both empty. It is reset to logic "0" whenever either the THR or TSR contains a data character. Bit 6 is a read only bit. In the FIFO mode this bit is set whenever the THR and TSR are both empty,

Bit 7

This bit is permanently set to logic "0" in the 450 mode. In the FIFO mode, this bit is set to a logic "1" when there is at least one parity error, framing error or break indication in the FIFO. This bit is cleared when the LSR is read if there are no subsequent errors in the FIFO.

MODEM STATUS REGISTER (MSR)
Address Offset = 6H, DLAB = X, READ/WRITE

This 8 bit register provides the current state of the control lines from the MODEM (or peripheral device). In addition to this current state information, four bits of the MODEM Status Register (MSR) provide change information. These bits are set to logic "1" whenever a control input from the MODEM changes state. They are reset to logic "0" whenever the MODEM Status Register is read.

Downloaded from Arrow.com.

Bit 0
Delta Clear To Send (DCTS). Bit 0 indicates that the nCTS input to the chip has changed state since the last time the MSR was read.

Bit 1
Delta Data Set Ready (DDSR). Bit 1 indicates that the nDSR input has changed state since the last time the MSR was read.

Bit 2
Trailing Edge of Ring Indicator (TERI). Bit 2 indicates that the nRI input has changed from logic "0" to logic "1".

Bit 3
Delta Data Carrier Detect (DDCD). Bit 3 indicates that the nDCD input to the chip has changed state.

NOTE: Whenever bit 0, 1, 2, or 3 is set to a logic "1", a MODEM Status Interrupt is generated.

Bit 4
This bit is the complement of the Clear To Send (nCTS) input. If bit 4 of the MCR is set to logic "1", this bit is equivalent to nRTS in the MCR.

Bit 5
This bit is the complement of the Data Set Ready (nDSR) input. If bit 4 of the MCR is set to logic "1", this bit is equivalent to DTR in the MCR.

Bit 6
This bit is the complement of the Ring Indicator (nRI) input. If bit 4 of the MCR is set to logic "1", this bit is equivalent to OUT1 in the MCR.

Bit 7
This bit is the complement of the Data Carrier Detect (nDCD) input. If bit 4 of the MCR is set to logic "1", this bit is equivalent to OUT2 in the MCR.

SCRATCHPAD REGISTER (SCR)
Address Offset =7H, DLAB =X, READ/WRITE

This 8 bit read/write register has no effect on the operation of the Serial Port. It is intended as a scratchpad register to be used by the programmer to hold data temporarily.

PROGRAMMABLE BAUD RATE GENERATOR (AND DIVISOR LATCHES DLH, DLL)

The Serial Port contains a programmable Baud Rate Generator that is capable of taking any clock input (DC to 3 MHz) and dividing it by any divisor from 1 to 65535. This output frequency of the Baud Rate Generator is 16x the Baud rate. Two 8 bit latches store the divisor in 16 bit binary format. These Divisor Latches must be loaded during initialization in order to insure desired operation of the Baud Rate Generator. Upon loading either of the Divisor Latches, a 16 bit Baud counter is immediately loaded. This prevents long counts on initial load. If a 0 is loaded into the BRG registers the output divides the clock by the number 3. If a 1 is loaded the output is the inverse of the input oscillator. If a two is loaded the output is a divide by 2 signal with a 50% duty cycle. If a 3 or greater is loaded the output is low for 2 bits and high for the remainder of the count. The input clock to the BRG is the 24 MHz crystal divided by 13, giving a 1.8462 MHz clock.

Table 33 shows the baud rates possible with a 1.8462 MHz crystal.

Effect Of The Reset on Register File

The Reset Function Table (Table 34) details the effect of the Reset input on each of the registers of the Serial Port.

Downloaded from Arrow.com.

FIFO INTERRUPT MODE OPERATION

When the RCVR FIFO and receiver interrupts are enabled (FCR bit 0 = "1", IER bit 0 = "1"), RCVR interrupts occur as follows:

A. The receive data available interrupt will be issued when the FIFO has reached its programmed trigger level; it is cleared as soon as the FIFO drops below its programmed trigger level.

B. The IIR receive data available indication also occurs when the FIFO trigger level is reached. It is cleared when the FIFO drops below the trigger level.

C. The receiver line status interrupt (IIR=06H), has higher priority than the received data available (IIR=04H) interrupt.

D. The data ready bit (LSR bit 0)is set as soon as a character is transferred from the shift register to the RCVR FIFO. It is reset when the FIFO is empty.

When RCVR FIFO and receiver interrupts are enabled, RCVR FIFO timeout interrupts occur as follows:

A. A FIFO timeout interrupt occurs if all the following conditions exist:
   - At least one character is in the FIFO
   - The most recent serial character received was longer than 4 continuous character times ago. (If 2 stop bits are programmed, the second one is included in this time delay.)
   - The most recent CPU read of the FIFO was longer than 4 continuous character times ago.

   This will cause a maximum character received to interrupt issued delay of 160 msec at 300 BAUD with a 12 bit character.

B. Character times are calculated by using the RCLK input for a clock signal (this makes the delay proportional to the baudrate).

C. When a timeout interrupt has occurred it is cleared and the timer reset when the CPU reads one character from the RCVR FIFO.

D. When a timeout interrupt has not occurred the timeout timer is reset after a new character is received or after the CPU reads the RCVR FIFO.

When the XMIT FIFO and transmitter interrupts are enabled (FCR bit 0 = "1", IER bit 1 = "1"), XMIT interrupts occur as follows:

A. The transmitter holding register interrupt (02H) occurs when the XMIT FIFO is empty; it is cleared as soon as the transmitter holding register is written to (1 of 16 characters may be written to the XMIT FIFO while servicing this interrupt) or the IIR is read.

B. The transmitter FIFO empty indications will be delayed 1 character time minus the last stop bit time whenever the following occurs: THRE=1 and there have not been at least two bytes at the same time in the transmitter FIFO since the last THRE=1. The transmitter interrupt after changing FCR0 will be immediate, if it is enabled.

Character timeout and RCVR FIFO trigger level interrupts have the sme priority as the current received data available interrupt; XMIT FIFO empty has the same priority as the current transmitter holding register empty interrupt.

FIFO POLLED MODE OPERATION

With FCR bit 0 = "1" resetting IER bits 0, 1, 2 or 3 or all to zero puts the UART in the FIFO Polled Mode of operation. Since the RCVR and

Downloaded from Arrow.com.

XMITTER are controlled separately, either one or both can be in the polled mode of operation.

In this mode, the user's program will check RCVR and XMITTER status via the LSR. LSR definitions for the FIFO Polled Mode are as follows:

- Bit 0=1 as long as there is one byte in the RCVR FIFO.
- Bits 1 to 4 specify which error(s) have occurred. Character error status is handled the same way as when in the interrupt mode, the IIR is not affected since EIR bit 2=0.
- Bit 5 indicates when the XMIT FIFO is empty.
- Bit 6 indicates that both the XMIT FIFO and shift register are empty.
- Bit 7 indicates whether there are any errors in the RCVR FIFO.

There is no trigger level reached or timeout condition indicated in the FIFO Polled Mode, however, the RCVR and XMIT FIFOs are still fully capable of holding characters.

Table 33 - Baud Rates Using 1.8462 MHz Clock (24 MHz/13)

DESIRED BAUD RATE	DIVISOR USED TO GENERATE 16X CLOCK	PERCENT ERROR DIFFERENCE BETWEEN DESIRED AND ACTUAL*	CROC: BIT 7 OR 6
50	2307	0.03	X
75	1538	0.03	X
110	1049	0.005	X
134.5	858	0.01	X
150	769	0.03	X
300	384	0.16	X
600	192	0.16	X
1200	96	0.16	X
1800	64	0.16	X
2000	58	0.5	X
2400	48	0.16	X
3600	32	0.16	X
4800	24	0.16	X
7200	16	0.16	X
9600	12	0.16	X
19200	6	0.16	X
38400	3	0.16	X
57600	2	1.6	X
115200	1	0.16	X
230400	32770	0.16	1
460800	32769	0.16	1

Downloaded from Arrow.com.

Table 34 - Reset Function Table

REGISTER/SIGNAL	RESET CONTROL	RESET STATE
Interrupt Enable Register	RESET	All bits low
Interrupt Identification Reg.	RESET	Bit 0 is high; Bits 1 thru 7 low
FIFO Control	RESET	All bits low
Line Control Reg.	RESET	All bits low
MODEM Control Reg.	RESET	All bits low
Line Status Reg.	RESET	All bits low except 5, 6 high
MODEM Status Reg.	RESET	Bits 0 - 3 low; Bits 4 - 7 input
TXD1, TXD2	RESET	High
INTRPT (RCVR errs)	RESET/Read LSR	Low
INTRPT (RCVR Data Ready)	RESET/Read RBR	Low
INTRPT (THRE)	RESET/ReadIIR/Write THR	Low
OUT2B	RESET	High
RTSB	RESET	High
DTRB	RESET	High
OUT1B	RESET	High
RCVR FIFO	RESET/FCR1*FCR0/□FCR0	All Bits Low
XMIT FIFO	RESET/FCR1*FCR0/□FCR0	All Bits Low

Downloaded from Arrow.com.

Table 35 - Register Summary for an Individual UART Channel

REGISTER ADDRESS*	REGISTER NAME	REGISTER SYMBOL	BIT 0	BIT 1
ADDR = 0 DLAB = 0	Receive Buffer Register (Read Only)	RBR	Data Bit 0 (Note 1)	Data Bit 1
ADDR = 0 DLAB = 0	Transmitter Holding Register (Write Only)	THR	Data Bit 0	Data Bit 1
ADDR = 1 DLAB = 0	Interrupt Enable Register	IER	Enable Received Data Available Interrupt (ERDAI)	Enable Transmitter Holding Register Empty Interrupt (ETHREI)
ADDR = 2	Interrupt Ident. Register (Read Only)	IIR	"0" if Interrupt Pending	Interrupt ID Bit
ADDR = 2	FIFO Control Register (Write Only)	FCR	FIFO Enable	RCVR FIFO Reset
ADDR = 3	Line Control Register	LCR	Word Length Select Bit 0 (WLS0)	Word Length Select Bit 1 (WLS1)
ADDR = 4	MODEM Control Register	MCR	Data Terminal Ready (DTR)	Request to Send (RTS)
ADDR = 5	Line Status Register	LSR	Data Ready (DR)	Overrun Error (OE)
ADDR = 6	MODEM Status Register	MSR	Delta Clear to Send (DCTS)	Delta Data Set Ready (DDSR)
ADDR = 7	Scratch Register (Note 4)	SCR	Bit 0	Bit 1
ADDR = 0 DLAB = 1	Divisor Latch (LS)	DDL	Bit 0	Bit 1
ADDR = 1 DLAB = 1	Divisor Latch (MS)	DLM	Bit 8	Bit 9

*DLAB is Bit 7 of the Line Control Register (ADDR = 3).

Note 1: Bit 0 is the least significant bit. It is the first bit serially transmitted or received.
Note 2: When operating in the XT mode, this bit will be set any time that the transmitter shift register is empty.

Downloaded from Arrow.com.

Table 35 - Register Summary for an Individual UART Channel (continued)

BIT 2	BIT 3	BIT 4	BIT 5	BIT 6	BIT 7
Data Bit 2	Data Bit 3	Data Bit 4	Data Bit 5	Data Bit 6	Data Bit 7
Data Bit 2	Data Bit 3	Data Bit 4	Data Bit 5	Data Bit 6	Data Bit 7
Enable Receiver Line Status Interrupt (ELSI)	Enable MODEM Status Interrupt (EMSI)	0	0	0	0
Interrupt ID Bit	Interrupt ID Bit (Note 5)	0	0	FIFOs Enabled (Note 5)	FIFOs Enabled (Note 5)
XMIT FIFO Reset	DMA Mode Select (Note 6)	Reserved	Reserved	RCVR Trigger LSB	RCVR Trigger MSB
Number of Stop Bits (STB)	Parity Enable (PEN)	Even Parity Select (EPS)	Stick Parity	Set Break	Divisor Latch Access Bit (DLAB)
OUT1 (Note 3)	OUT2 (Note 3)	Loop	0	0	0
Parity Error (PE)	Framing Error (FE)	Break Interrupt (BI)	Transmitter Holding Register (THRE)	Transmitter Empty (TEMT) (Note 2)	Error in RCVR FIFO (Note 5)
Trailing Edge Ring Indicator (TERI)	Delta Data Carrier Detect (DDCD)	Clear to Send (CTS)	Data Set Ready (DSR)	Ring Indicator (RI)	Data Carrier Detect (DCD)
Bit 2	Bit 3	Bit 4	Bit 5	Bit 6	Bit 7
Bit 2	Bit 3	Bit 4	Bit 5	Bit 6	Bit 7
Bit 10	Bit 11	Bit 12	Bit 13	Bit 14	Bit 15

Note 3: This bit no longer has a pin associated with it.
Note 4: When operating in the XT mode, this register is not available.
Note 5: These bits are always zero in the non-FIFO mode.
Note 6: Writing a one to this bit has no effect. DMA modes are not supported in this chip.

Downloaded from Arrow.com.

NOTES ON SERIAL PORT OPERATION
FIFO MODE OPERATION:

GENERAL

The RCVR FIFO will hold up to 16 bytes regardless of which trigger level is selected.

TX AND RX FIFO OPERATION

The Tx portion of the UART transmits data through TXD as soon as the CPU loads a byte into the Tx FIFO. **The UART will prevent loads to the Tx FIFO if it currently holds 16 characters.** Loading to the Tx FIFO will again be enabled as soon as the next character is transferred to the Tx shift register. These capabilities account for the largely autonomous operation of the Tx.

The UART starts the above operations typically with a Tx interrupt. The chip issues a Tx interrupt whenever the Tx FIFO is empty and the Tx interrupt is enabled, except in the following instance. Assume that the Tx FIFO is empty and the CPU starts to load it. When the first byte enters the FIFO the Tx FIFO empty interrupt will transition from active to inactive. Depending on the execution speed of the service routine software, the UART may be able to transfer this byte from the FIFO to the shift register before the CPU loads another byte. If this happens, the Tx FIFO will be empty again and typically the UART's interrupt line would transition to the active state. This could cause a system with an interrupt control unit to record a Tx FIFO empty condition, even though the CPU is currently servicing that interrupt.

Therefore, after the first byte has been loaded into the FIFO the UART will wait one serial character transmission time before issuing a new Tx FIFO empty interrupt.

This one character Tx interrupt delay will remain active until at least two bytes have been loaded into the FIFO, concurrently. When the Tx FIFO empties after this condition, the Tx interrupt will be activated without a one character delay.

Rx support functions and operation are quite different from those described for the transmitter. The Rx FIFO receives data until the number of bytes in the FIFO equals the selected interrupt trigger level. At that time if Rx interrupts are enabled, the UART will issue an interrupt to the CPU. The Rx FIFO will continue to store bytes until it holds 16 of them. It will not accept any more data when it is full. Any more data entering the Rx shift register will set the Overrun Error flag. Normally, the FIFO depth and the programmable trigger levels will give the CPU ample time to empty the Rx FIFO before an overrun occurs.

One side-effect of having a Rx FIFO is that the selected interrupt trigger level may be above the data level in the FIFO. This could occur when data at the end of the block contains fewer bytes than the trigger level. No interrupt would be issued to the CPU and the data would remain in the UART. **To prevent the software from having to check for this situation the chip incorporates a timeout interrupt.**

The timeout interrupt is activated when there is a least one byte in the Rx FIFO, and neither the CPU nor the Rx shift register has accessed the Rx FIFO within 4 character times of the last byte. The timeout interrupt is cleared or reset when the CPU reads the Rx FIFO or another character enters it.

These FIFO related features allow optimization of CPU/UART transactions and are especially useful given the higher baud rate capability (256 kbaud).

Downloaded from Arrow.com.

INFRARED INTERFACE

The FDC37C669's infrared interface provides a two-way wireless communications port using infrared as a transmission medium. Two infrared implementations have been provided in the FDC37C669, IrDA and Amplitude Shift Keyed IR.

IrDA allows serial communication at baud rates up to 115K Baud. Each word is sent serially beginning with a zero value start bit. A zero is signaled by sending a single infrared pulse at the beginning of the serial bit time. A one is signaled by sending no infrared pulse during the bit time. Please refer to the AC timing for the parameters of these pulses and the IrDA waveform.

The Amplitude Shift Keyed infrared allows serial communication at baud rates up to 19.2K Baud. Each word is sent serially beginning with a zero value start bit. A zero is signaled by sending a 500kHz waveform for the duration of the serial bit time. A one is signaled by sending no transmission the bit time. Please refer to the AC timing for the parameters of the ASKIR waveform.

If the Half Duplex option is chosen, there is a time-out when the direction of the transmission is changed. This time-out starts at the last bit transferred during a transmission and blocks the receiver input until the time-out expires. If the transmit buffer is loaded with more data before the time-out expires, the timer is restarted after the new byte is transmitted. If data is loaded into the transmit buffer while a character is being received, the transmission will not start until the time-out expires after the last receive bit has been received. If the start bit of another character is received during this time-out, the timer is restarted after the new character is received. The time-out is four character times. A character time is defined as 10 bit times regardless of the actual word length being used.

Downloaded from Arrow.com.

PARALLEL PORT

The FDC37C669 incorporates an IBM XT/AT compatible parallel port. The FDC37C669 supports the optional PS/2 type bi-directional parallel port (SPP), the Enhanced Parallel Port (EPP) and the Extended Capabilities Port (ECP) parallel port modes. Refer to the FDC37C669 Configuration Registers and FDC37C669 Hardware Configuration description for information on disabling, power down, changing the base address of the parallel port, and selecting the mode of operation.

DATA PORT	BASE ADDRESS + 00H
STATUS PORT	BASE ADDRESS + 01H
CONTROL PORT	BASE ADDRESS + 02H
EPP ADDR PORT	BASE ADDRESS + 03H

The bit map of these registers is:

The FDC37C669 also incorporates SMSC's ChiProtect circuitry, which prevents possible damage to the parallel port due to printer power-up.

The functionality of the Parallel Port is achieved through the use of eight addressable ports, with their associated registers and control gating. The control and data port are read/write by the CPU, the status port is read/write in the EPP mode. The address map of the Parallel Port is shown below:

EPP DATA PORT 0	BASE ADDRESS + 04H
EPP DATA PORT 1	BASE ADDRESS + 05H
EPP DATA PORT 2	BASE ADDRESS + 06H
EPP DATA PORT 3	BASE ADDRESS + 07H

	D0	D1	D2	D3	D4	D5	D6	D7	Note
DATA PORT	PD0	PD1	PD2	PD3	PD4	PD5	PD6	PD7	1
STATUS PORT	TMOUT	0	0	nERR	SLCT	PE	nACK	nBUSY	1
CONTROL PORT	STROBE	AUTOFD	nINIT	SLC	IRQE	PCD	0	0	1
EPP ADDR PORT	PD0	PD1	PD2	PD3	PD4	PD5	PD6	AD7	2,3
EPP DATA PORT 0	PD0	PD1	PD2	PD3	PD4	PD5	PD6	PD7	2,3
EPP DATA PORT 1	PD0	PD1	PD2	PD3	PD4	PD5	PD6	PD7	2,3
EPP DATA PORT 2	PD0	PD1	PD2	PD3	PD4	PD5	PD6	PD7	2,3
EPP DATA PORT 3	PD0	PD1	PD2	PD3	PD4	PD5	PD6	PD7	2,3

Note 1: These registers are available in all modes.
Note 2: These registers are only available in EPP mode.
Note 3: For EPP mode, IOCHRDY must be connected to the ISA bus.

Downloaded from Arrow.com.

Table 36 - Parallel Port Connector

HOST CONNECTOR	PIN NUMBER	STANDARD	EPP	ECP
1	77	nStrobe	nWrite	nStrobe
2-9	71-68, 66-63	PData<0:7>	PData<0:7>	PData<0:7>
10	62	nAck	Intr	nAck
11	61	Busy	nWait	Busy, PeriphAck(3)
12	60	PE	(NU)	PError, nAckReverse(3)
13	59	Select	(NU)	Select
14	76	nAutofd	nDatastb	nAutoFd, HostAck(3)
15	75	nError	(NU)	nFault(1) nPeriphRequest(3)
16	74	nInit	(NU)	nInit(1) nReverseRqst(3)
17	73	nSelectin	nAddrstrb	nSelectIn(1,3)

(1) = Compatible Mode
(3) = High Speed Mode

Note: For the cable interconnection required for ECP support and the Slave Connector pin numbers, refer to the IEEE 1284 Extended Capabilities Port Protocol and ISA Standard, Rev. 1.09, Jan. 7, 1993. This document is available from Microsoft.

Downloaded from Arrow.com.

IBM XT/AT COMPATIBLE, BI-DIRECTIONAL AND EPP MODES

DATA PORT
ADDRESS OFFSET = 00H

The Data Port is located at an offset of '00H' from the base address. The data register is cleared at initialization by RESET. During a WRITE operation, the Data Register latches the contents of the data bus with the rising edge of the nIOW input. The contents of this register are buffered (non inverting) and output onto the PD0 - PD7 ports. During a READ operation in SPP mode, PD0 - PD7 ports are buffered (not latched) and output to the host CPU.

STATUS PORT
ADDRESS OFFSET = 01H

The Status Port is located at an offset of '01H' from the base address. The contents of this register are latched for the duration of an nIOR read cycle. The bits of the Status Port are defined as follows:

BIT 0 TMOUT - TIME OUT
This bit is valid in EPP mode only and indicates that a 10 usec time out has occured on the EPP bus. A logic O means that no time out error has occured; a logic 1 means that a time out error has been detected. This bit is cleared by a RESET. Writing a one to this bit clears the time out status bit. On a write, this bit is self clearing and does not require a write of a zero. Writing a zero to this bit has no effect.

BITS 1, 2 - are not implemented as register bits, during a read of the Printer Status Register these bits are a low level.

BIT 3 nERR - nERROR
The level on the nERROR input is read by the CPU as bit 3 of the Printer Status Register. A logic O means an error has been detected; a logic 1 means no error has been detected.

BIT 4 SLCT - PRINTER SELECTED STATUS
The level on the SLCT input is read by the CPU as bit 4 of the Printer Status Register. A logic 1 means the printer is on line; a logic 0 means it is not selected.

BIT 5 PE - PAPER END
The level on the PE input is read by the CPU as bit 5 of the Printer Status Register. A logic 1 indicates a paper end; a logic 0 indicates the presence of paper.

BIT 6 nACK - nACKNOWLEDGE
The level on the nACK input is read by the CPU as bit 6 of the Printer Status Register. A logic 0 means that the printer has received a character and can now accept another. A logic 1 means that it is still processing the last character or has not received the data.

BIT 7 nBUSY - nBUSY
The complement of the level on the nBUSY input is read by the CPU as bit 7 of the Printer Status Register. A logic 0 in this bit means that the printer is busy and cannot accept a new character. A logic 1 means that it is ready to accept the next character.

CONTROL PORT
ADDRESS OFFSET = 02H

The Control Port is located at an offset of '02H' from the base address. The Control Register is initialized by the RESET input, bits 0 to 5 only being affected; bits 6 and 7 are hard wired low.

Downloaded from Arrow.com.

BIT 0 STROBE - STROBE
This bit is inverted and output onto the nSTROBE output.

BIT 1 AUTOFD - AUTOFEED
This bit is inverted and output onto the nAUTOFD output. A logic 1 causes the printer to generate a line feed after each line is printed. A logic 0 means no autofeed.

BIT 2 nINIT - nINITIATE OUTPUT
This bit is output onto the nINIT output without inversion.

BIT 3 SLCTIN - PRINTER SELECT INPUT
This bit is inverted and output onto the nSLCTIN output. A logic 1 on this bit selects the printer; a logic 0 means the printer is not selected.

BIT 4 IRQE - INTERRUPT REQUEST ENABLE
The interrupt request enable bit when set to a high level may be used to enable interrupt requests from the Parallel Port to the CPU. An interrupt request is generated on the IRQ port by a positive going nACK input. When the IRQE bit is programmed low the IRQ is disabled.

BIT 5 PCD - PARALLEL CONTROL DIRECTION
Parallel Control Direction is valid in extended mode only (CR#1<3>=0). In printer mode, the direction is always out regardless of the state of this bit. In bi-directional mode, a logic 0 means that the printer port is in output mode (write); a logic 1 means that the printer port is in input mode (read).

Bits 6 and 7 during a read are a low level, and cannot be written.

EPP ADDRESS PORT
ADDRESS OFFSET = 03H

The EPP Address Port is located at an offset of '03H' from the base address. The address register is cleared at initialization by RESET. During a WRITE operation, the contents of DB0-DB7 are buffered (non inverting) and output onto the PD0 - PD7 ports, the leading edge of nIOW causes an EPP ADDRESS WRITE cycle to be performed, the trailing edge of IOW latches the data for the duration of the EPP write cycle. During a READ operation, PD0 - PD7 ports are read, the leading edge of IOR causes an EPP ADDRESS READ cycle to be performed and the data output to the host CPU, the deassertion of ADDRSTB latches the PData for the duration of the IOR cycle. This register is only available in EPP mode.

EPP DATA PORT 0
ADDRESS OFFSET = 04H

The EPP Data Port 0 is located at an offset of '04H' from the base address. The data register is cleared at initialization by RESET. During a WRITE operation, the contents of DB0-DB7 are buffered (non inverting) and output onto the PD0 - PD7 ports, the leading edge of nIOW causes an EPP DATA WRITE cycle to be performed, the trailing edge of IOW latches the data for the duration of the EPP write cycle. During a READ operation, PD0 - PD7 ports are read, the leading edge of IOR causes an EPP READ cycle to be performed and the data output to the host CPU, the deassertion of DATASTB latches the PData for the duration of the IOR cycle. This register is only available in EPP mode.

EPP DATA PORT 1/ADDRESS OFFSET = 05H

The EPP Data Port 1 is located at an offset of '05H' from the base address. Refer to EPP DATA PORT 0 for a description of operation. This register is only available in EPP mode.

EPP DATA PORT 2/ADDRESS OFFSET = 06H

The EPP Data Port 2 is located at an offset of '06H' from the base address. Refer to EPP DATA PORT 0 for a description of operation. This register is only available in EPP mode.

EPP DATA PORT 3
ADDRESS OFFSET = 07H
The EPP Data Port 3 is located at an offset of '07H' from the base address. Refer to EPP DATA PORT 0 for a description of operation. This register is only available in EPP mode.

EPP 1.9 OPERATION

When the EPP mode is selected in the configuration

Downloaded from Arrow.com.

register, the standard and bi-directional modes are also available. If no EPP Read, Write or Address cycle is currently executing, then the PDx bus is in the standard or bi-directional mode, and all output signals (STROBE, AUTOFD, INIT) are as set by the SPP Control Port and direction is controlled by PCD of the Control port.

In EPP mode, the system timing is closely coupled to the EPP timing. For this reason, a watchdog timer is required to prevent system lockup. The timer indicates if more than 10usec have elapsed from the start of the EPP cycle (nIOR or nIOW asserted) to nWAIT being deasserted (after command). If a time-out occurs, the current EPP cycle is aborted and the time-out condition is indicated in Status bit 0.

During an EPP cycle, if STROBE is active, it overrides the EPP write signal forcing the PDx bus to always be in a write mode and the nWRITE signal to always be asserted.

Software Constraints

Before an EPP cycle is executed, the software must ensure that the control register bit PCD is a logic "0" (i.e. a 04H or 05H should be written to the Control port). If the user leaves PCD as a logic "1", and attempts to perform an EPP write, the chip is unable to perform the write (because PCD is a logic "1") and will appear to perform an EPP read on the parallel bus, no error is indicated.

EPP 1.9 Write

The timing for a write operation (address or data) is shown in timing diagram EPP 1.9 Write Data or Address cycle. IOCHRDY is driven active low at the start of each EPP write and is released when it has been determined that the write cycle can complete. The write cycle can complete under the following circumstances:

1. If the EPP bus is not ready (nWAIT is active low) when nDATASTB or nADDRSTB goes active then the write can complete when nWAIT goes inactive high.

2. If the EPP bus is ready (nWAIT is inactive high) then the chip must wait for it to go active low before changing the state of nDATASTB, nWRITE or nADDRSTB. The write can complete once nWAIT is determined inactive.

Write Sequence of operation

1. The host selects an EPP register, places data on the SData bus and drives nIOW active.
2. The chip drives IOCHRDY inactive (low).
3. If WAIT is not asserted, the chip must wait until WAIT is asserted.
4. The chip places address or data on PData bus, clears PDIR, and asserts nWRITE.
5. Chip asserts nDATASTB or nADDRSTRB indicating that PData bus contains valid information, and the WRITE signal is valid.
6. Peripheral deasserts nWAIT, indicating that any setup requirements have been satisfied and the chip may begin the termination phase of the cycle.
7. a) The chip deasserts nDATASTB or nADDRSTRB, this marks the beginning of the termination phase. If it has not already done so, the peripheral should latch the information byte now.
   b) The chip latches the data from the SData bus for the PData bus and asserts (releases) IOCHRDY allowing the host to complete the write cycle.
8. Peripheral asserts nWAIT, indicating to the host that any hold time requirements have been satisfied and acknowledging the termination of the cycle.
9. Chip may modify nWRITE and nPDATA in preparation for the next cycle.

EPP 1.9 Read

The timing for a read operation (data) is shown in timing diagram EPP Read Data cycle. IOCHRDY is driven active low at the start of each EPP read and is released when it has been determined that the read cycle can complete. The read cycle can complete under the following circumstances:

1. If the EPP bus is not ready (nWAIT is active low) when nDATASTB goes active then the read can complete when nWAIT goes inactive high.

Downloaded from Arrow.com.

2. If the EPP bus is ready (nWAIT is inactive high) then the chip must wait for it to go active low before changing the state of WRITE or before nDATASTB goes active. The read can complete once nWAIT is determined inactive.

Read Sequence of Operation

1. The host selects an EPP register and drives nIOR active.
2. The chip drives IOCHRDY inactive (low).
3. If WAIT is not asserted, the chip must wait until WAIT is asserted.
4. The chip tri-states the PData bus and deasserts nWRITE.
5. Chip asserts nDATASTB or nADDRSTRB indicating that PData bus is tri-stated, PDIR is set and the nWRITE signal is valid.
6. Peripheral drives PData bus valid.
7. Peripheral deasserts nWAIT, indicating that PData is valid and the chip may begin the termination phase of the cycle.
8. a) The chip latches the data from the PData bus for the SData bus, deasserts nDATASTB or nADDRSTRB, this marks the beginning of the termination phase.
   b) The chip drives the valid data onto the SData bus and asserts (releases) IOCHRDY allowing the host to complete the read cycle.
9. Peripheral tri-states the PData bus and asserts nWAIT, indicating to the host that the PData bus is tri-stated.
10. Chip may modify nWRITE, PDIR and nPDATA in preparation for the next cycle.

EPP 1.7 OPERATION

When the EPP 1.7 mode is selected in the configuration register, the standard and bi-directional modes are also available. If no EPP Read, Write or Address cycle is currently executing, then the PDx bus is in the standard or bi-directional mode, and all output signals (STROBE, AUTOFD, INIT) are as set by the SPP Control Port and direction is controlled by PCD of the Control port.

In EPP mode, the system timing is closely coupled to the EPP timing. For this reason, a watchdog timer is required to prevent system lockup. The timer indicates if more than 10usec have elapsed from the start of the EPP cycle (nIOR or nIOW asserted) to the end of the cycle nIOR or nIOW deasserted). If a time-out occurs, the current EPP cycle is aborted and the time-out condition is indicated in Status bit 0.

Software Constraints

Before an EPP cycle is executed, the software must ensure that the control register bits D0, D1 and D3 are set to zero. Also, bit D5 (PCD) is a logic "0" for an EPP write or a logic "1" for and EPP read.

EPP 1.7 Write

The timing for a write operation (address or data) is shown in timing diagram EPP 1.7 Write Data or Address cycle. IOCHRDY is driven active low when nWAIT is active low during the EPP cycle. This can be used to extend the cycle time. The write cycle can complete when nWAIT is inactive high.

Write Sequence of Operation

1. The host sets PDIR bit in the control register to a logic "0". This asserts nWRITE.
2. The host selects an EPP register, places data on the SData bus and drives nIOW active.
3. The chip places address or data on PData bus.
4. Chip asserts nDATASTB or nADDRSTRB indicating that PData bus contains valid information, and the WRITE signal is valid.
5. If nWAIT is asserted, IOCHRDY is deasserted until the peripheral deasserts nWAIT or a time-out occurs.
6. When the host deasserts nI0W the chip deasserts nDATASTB or nADDRSTRB and latches the data from the SData bus for the PData bus.
7. Chip may modify nWRITE, PDIR and nPDATA in preparation of the next cycle.

Downloaded from Arrow.com.

EPP 1.7 Read

The timing for a read operation (data) is shown in timing diagram EPP 1.7 Read Data cycle. IOCHRDY is driven active low when nWAIT is active low during the EPP cycle. This can be used to extend the cycle time. The read cycle can complete when nWAIT is inactive high.

Read Sequence of Operation

1. The host sets PDIR bit in the control register to a logic "1". This deasserts nWRITE and tri-states the PData bus.
2. The host selects an EPP register and drives nIOR active.
3. Chip asserts nDATASTB or nADDRSTRB indicating that PData bus is tri-stated, PDIR is set and the nWRITE signal is valid.
4. If nWAIT is asserted, IOCHRDY is deasserted until the peripheral deasserts nWAIT or a time-out occurs.
5. The Peripheral drives PData bus valid.
6. The Peripheral deasserts nWAIT, indicating that PData is valid and the chip may begin the termination phase of the cycle.
7. When the host deasserts nI0R the chip deasserts nDATASTB or nADDRSTRB.
8. Peripheral tri-states the PData bus.
9. Chip may modify nWRITE, PDIR and nPDATA in preparation of the next cycle.

Table 37 - EPP Pin Descriptions

EPP SIGNAL	EPP NAME	TYPE	EPP DESCRIPTION
nWRITE	nWrite	O	This signal is active low. It denotes a write operation.
PD<0:7>	Address/Data	I/O	Bi-directional EPP byte wide address and data bus.
INTR	Interrupt	I	This signal is active high and positive edge triggered. (Pass through with no inversion, Same as SPP).
WAIT	nWait	I	This signal is active low. It is driven inactive as a positive acknowledgement from the device that the transfer of data is completed. It is driven active as an indication that the device is ready for the next transfer.
DATASTB	nData Strobe	O	This signal is active low. It is used to denote data read or write operation.
RESET	nReset	O	This signal is active low. When driven active, the EPP device is reset to its initial operational mode.

Downloaded from Arrow.com.

EPP SIGNAL	EPP NAME	TYPE	EPP DESCRIPTION
ADDRSTB	nAddress Strobe	O	This signal is active low. It is used to denote address read or write operation.
PE	Paper End	I	Same as SPP mode.
SLCT	Printer Selected Status	I	Same as SPP mode.
nERR	Error	I	Same as SPP mode.
PDIR	Parallel Port Direction	O	This output shows the direction of the data transfer on the parallel port bus. A low means an output/write condition and a high means an input/read condition. This signal is normally a low (output/write) unless PCD of the control register is set or if an EPP read cycle is in progress.

Note 1: SPP and EPP can use 1 common register.
Note 2: nWrite is the only EPP output that can be over-ridden by SPP control port during an EPP cycle. For correct EPP read cycles, PCD is required to be a low.

Downloaded from Arrow.com.

EXTENDED CAPABILITIES PARALLEL PORT

ECP provides a number of advantages, some of which are listed below. The individual features are explained in greater detail in the remainder of this section.

- High performance half-duplex forward and reverse channel
- Interlocked handshake, for fast reliable transfer
- Optional single byte RLE compression for improved throughput (64:1)
- Channel addressing for low-cost peripherals
- Maintains link and data layer separation
- Permits the use of active output drivers
- Permits the use of adaptive signal timing
- Peer-to-peer capability

Vocabulary

The following terms are used in this document:

assert When a signal asserts it transitions to a "true" state, when a signal deasserts it transitions to a "false" state.

forward Host to Peripheral communication.

reverse Peripheral to Host communication.

PWord A port word; equal in size to the width of the ISA interface. For this implementation, PWord is always 8 bits.

1 A high level.

0 A low level.

These terms may be considered synonymous:

- PeriphClk, nAck
- HostAck, nAutoFd
- PeriphAck, Busy
- nPeriphRequest, nFault
- nReverseRequest, nInit
- nAckReverse, PError
- Xflag, Select
- ECPMode, nSelectIn
- HostClk, nStrobe

Reference Document:

IEEE 1284 Extended Capabilities Port Protocol and ISA Interface Standard, Rev 1.09, Jan 7, 1993. This document is available from Microsoft.

The bit map of the Extended Parallel Port registers is:

	D7	D6	D5	D4	D3	D2	D1	D0	Note
data	PD7	PD6	PD5	PD4	PD3	PD2	PD1	PD0	
ecpAFifo	Addr/RLE	Address or RLE field							2
dsr	nBusy	nAck	PError	Select	nFault	0	0	0	1
dcr	0	0	Direction	ackIntEn	SelectIn	nInit	autofd	strobe	1
cFifo	Parallel Port Data FIFO								2
ecpDFifo	ECP Data FIFO								2
tFifo	Test FIFO								2
cnfgA	0	0	0	1	0	0	0	0	
cnfgB	compress	intrValue	0	0	0	0	0	0	
ecr	MODE			nErrIntrEn	dmaEn	serviceIntr	full	empty	

Note 1: These registers are available in all modes.
Note 2: All FIFOs use one common 16 byte FIFO.

ISA IMPLEMENTATION STANDARD

This specification describes the standard ISA interface to the Extended Capabilities Port (ECP). All ISA devices supporting ECP must meet the requirements contained in this section or the port will not be supported by Microsoft.

Downloaded from Arrow.com.

For a description of the ECP Protocol, please refer to the IEEE 1284 Extended Capabilities Port Protocol and ISA Interface Standard, Rev. 1.09, Jan.7, 1993. This document is available from Microsoft.

Description

The port is software and hardware compatible with existing parallel ports so that it may be used as a standard LPT port if ECP is not required. The port is designed to be simple and requires a small number of gates to implement. It does not do any "protocol" negotiation, rather it provides an automatic high burst-bandwidth channel that supports DMA for ECP in both the forward and reverse directions.

Small FIFOs are employed in both forward and reverse directions to smooth data flow and improve the maximum bandwidth requirement. The size of the FIFO is 16 bytes deep. The port supports an automatic handshake for the standard parallel port to improve compatibility mode transfer speed.

The port also supports run length encoded (RLE) decompression (required) in hardware. Compression is accomplished by counting identical bytes and transmitting an RLE byte that indicates how many times the next byte is to be repeated. Decompression simply intercepts the RLE byte and repeats the following byte the specified number of times. Hardware support for compression is optional.

Downloaded from Arrow.com.

Table 38 - ECP Pin Descriptions

NAME	TYPE	DESCRIPTION
nStrobe	O	During write operations nStrobe registers data or address into the slave on the asserting edge (handshakes with Busy).
PData 7:0	I/O	Contains address or data or RLE data.
nAck	I	Indicates valid data driven by the peripheral when asserted. This signal handshakes with nAutoFd in reverse.
PeriphAck (Busy)	I	This signal deasserts to indicate that the peripheral can accept data. This signal handshakes with nStrobe in the forward direction. In the reverse direction this signal indicates whether the data lines contain ECP command information or data. The peripheral uses this signal to flow control in the forward direction. It is an "interlocked" handshake with nStrobe. PeriphAck also provides command information in the reverse direction.
PError (nAckReverse)	I	Used to acknowledge a change in the direction the transfer (asserted = forward). The peripheral drives this signal low to acknowledge nReverseRequest. It is an "interlocked" handshake with nReverseRequest. The host relies upon nAckReverse to determine when it is permitted to drive the data bus.
Select	I	Indicates printer on line.
nAutoFd (HostAck)	O	Requests a byte of data from the peripheral when asserted, handshaking with nAck in the reverse direction. In the forward direction this signal indicates whether the data lines contain ECP address or data. The host drives this signal to flow control in the reverse direction. It is an "interlocked" handshake with nAck. HostAck also provides command information in the forward phase.
nFault (nPeriphRequest)	I	Generates an error interrupt when asserted. This signal provides a mechanism for peer-to-peer communication. This signal is valid only in the forward direction. During ECP Mode the peripheral is permitted (but not required) to drive this pin low to request a reverse transfer. The request is merely a "hint" to the host; the host has ultimate control over the transfer direction. This signal would be typically used to generate an interrupt to the host CPU.
nInit	O	Sets the transfer direction (asserted = reverse, deasserted = forward). This pin is driven low to place the channel in the reverse direction. The peripheral is only allowed to drive the bi-directional data bus while in ECP Mode and HostAck is low and nSelectIn is high.
nSelectIn	O	Always deasserted in ECP mode.

Downloaded from Arrow.com.

Register Definitions

The register definitions are based on the standard IBM addresses for LPT. All of the standard printer ports are supported. The additional registers attach to an upper bit decode of the standard LPT port definition to avoid conflict with standard ISA devices. The port is equivalent to a generic parallel port interface and may be operated in that mode. The port registers vary depending on the mode field in the ecr. The table below lists these dependencies. Operation of the devices in modes other that those specified is undefined.

Table 39 - ECP Register Definitions

NAME	ADDRESS (Note 1)	ECP MODES	FUNCTION
data	+000h R/W	000-001	Data Register
ecpAFifo	+000h R/W	011	ECP FIFO (Address)
dsr	+001h R/W	All	Status Register
dcr	+002h R/W	All	Control Register
cFifo	+400h R/W	010	Parallel Port Data FIFO
ecpDFifo	+400h R/W	011	ECP FIFO (DATA)
tFifo	+400h R/W	110	Test FIFO
cnfgA	+400h R	111	Configuration Register A
cnfgB	+401h R/W	111	Configuration Register B
ecr	+402h R/W	All	Extended Control Register

Note 1: These addresses are added to the parallel port base address as selected by configuration register or jumpers.
Note 2: All addresses are qualified with AEN. Refer to the AEN pin definition.

Table 40 - Mode Descriptions

MODE	DESCRIPTION*
000	SPP mode
001	PS/2 Parallel Port mde
010	Parallel Port Data FIFO mode
011	ECP Parallel Port mode
100	EPP mode (If this option is enabled in the configuration registers)
101	(Reserved)
110	Test mode
111	Configuration mode

*Refer to ECR Register Description

Downloaded from Arrow.com.

DATA and ecpAFifo PORT
ADDRESS OFFSET = 00H

Modes 000 and 001 (Data Port)

The Data Port is located at an offset of '00H' from the base address. The data register is cleared at initialization by RESET. During a WRITE operation, the Data Register latches the contents of the data bus on the rising edge of the nIOW input. The contents of this register are buffered (non inverting) and output onto the PD0 - PD7 ports. During a READ operation, PD0 - PD7 ports are read and output to the host CPU.

Mode 011 (ECP FIFO - Address/RLE)

A data byte written to this address is placed in the FIFO and tagged as an ECP Address/RLE. The hardware at the ECP port transmits this byte to the peripheral automatically. The operation of this register is only defined for the forward direction (direction is 0). Refer to the ECP Parallel Port Forward Timing Diagram, located in the Timing Diagrams section of this data sheet.

DEVICE STATUS REGISTER (dsr)
ADDRESS OFFSET = 01H

The Status Port is located at an offset of '01H' from the base address. Bits 0 - 2 are not implemented as register bits, during a read of the Printer Status Register these bits are a low level. The bits of the Status Port are defined as follows:

BIT 3 nFault
The level on the nFault input is read by the CPU as bit 3 of the Device Status Register.

BIT 4 Select
The level on the Select input is read by the CPU as bit 4 of the Device Status Register.

BIT 5 PError
The level on the PError input is read by the CPU as bit 5 of the Device Status Register. Printer Status Register.

BIT 6 nAck
The level on the nAck input is read by the CPU as bit 6 of the Device Status Register.

BIT 7 nBusy
The complement of the level on the BUSY input is read by the CPU as bit 7 of the Device Status Register.

DEVICE CONTROL REGISTER (dcr)
ADDRESS OFFSET = 02H

The Control Register is located at an offset of '02H' from the base address. The Control Register is initialized to zero by the RESET input, bits 0 to 5 only being affected; bits 6 and 7 are hard wired low.

BIT 0 STROBE - STROBE
This bit is inverted and output onto the nSTROBE output.

BIT 1 AUTOFD - AUTOFEED
This bit is inverted and output onto the nAUTOFD output. A logic 1 causes the printer to generate a line feed after each line is printed. A logic 0 means no autofeed.

BIT 2 nINIT - nINITIATE OUTPUT
This bit is output onto the nINIT output without inversion.

BIT 3 SELECTIN
This bit is inverted and output onto the nSLCTIN output. A logic 1 on this bit selects the printer; a logic 0 means the printer is not selected.

BIT 4 ackIntEn - INTERRUPT REQUEST ENABLE
The interrupt request enable bit when set to a high level may be used to enable interrupt

Downloaded from Arrow.com.

requests from the Parallel Port to the CPU due to a low to high transition on the nACK input. Refer to the description of the interrupt under Operation, Interrupts.

BIT 5 DIRECTION
If mode=000 or mode=010, this bit has no effect and the direction is always out regardless of the state of this bit. In all other modes, Direction is valid and a logic 0 means that the printer port is in output mode (write); a logic 1 means that the printer port is in input mode (read).

Bits 6 and 7 during a read are a low level, and cannot be written.

cFifo (Parallel Port Data FIFO)
ADDRESS OFFSET = 400h
Mode = 010

Bytes written or DMAed from the system to this FIFO are transmitted by a hardware handshake to the peripheral using the standard parallel port protocol. Transfers to the FIFO are byte aligned. This mode is only defined for the forward direction.

ecpDFifo (ECP Data FIFO)
ADDRESS OFFSET = 400H
Mode = 011

Bytes written or DMAed from the system to this FIFO, when the direction bit is 0, are transmitted by a hardware handshake to the peripheral using the ECP parallel port protocol. Transfers to the FIFO are byte aligned.

Data bytes from the peripheral are read under automatic hardware handshake from ECP into this FIFO when the direction bit is 1. Reads or DMAs from the FIFO will return bytes of ECP data to the system.

tFifo (Test FIFO Mode)
ADDRESS OFFSET = 400H
Mode = 110
Data bytes may be read, written or DMAed to or from the system to this FIFO in any direction.
Data in the tFIFO will not be transmitted to the to the parallel port lines using a hardware protocol handshake. However, data in the tFIFO may be displayed on the parallel port data lines.

The tFIFO will not stall when overwritten or underrun. If an attempt is made to write data to a full tFIFO, the new data is not accepted into the tFIFO. If an attempt is made to read data from an empty tFIFO, the last data byte is re-read again. The full and empty bits must always keep track of the correct FIFO state. The tFIFO will transfer data at the maximum ISA rate so that software may generate performance metrics.

The FIFO size and interrupt threshold can be determined by writing bytes to the FIFO and checking the full and serviceIntr bits.

The writeIntrThreshold can be determined by starting with a full tFIFO, setting the direction bit to 0 and emptying it a byte at a time until **serviceIntr** is set. This may generate a spurious interrupt, but will indicate that the threshold has been reached.

The readIntrThreshold can be determined by setting the direction bit to 1 and filling the empty tFIFO a byte at a time until **serviceIntr** is set. This may generate a spurious interrupt, but will indicate that the threshold has been reached.

Downloaded from Arrow.com.

Data bytes are always read from the head of tFIFO regardless of the value of the direction bit. For example if 44h, 33h, 22h is written to the FIFO, then reading the tFIFO will return 44h, 33h, 22h in the same order as was written.

cnfgA (Configuration Register A)
ADDRESS OFFSET = 400H
Mode = 111

This register is a read only register. When read, 10H is returned. This indicates to the system that this is an 8-bit implementation. (PWord = 1 byte)

cnfgB (Configuration Register B)
ADDRESS OFFSET = 401H
Mode = 111

BIT 7 compress
This bit is read only. During a read it is a low level. This means that this chip does not support hardware RLE compression. It does support hardware de-compression!

BIT 6 intrValue
Returns the value on the ISA iRq line to determine possible conflicts.

BITS 5:0 Reserved
During a read are a low level. These bits cannot be written.

ecr (Extended Control Register)
ADDRESS OFFSET = 402H
Mode = all

This register controls the extended ECP parallel port functions.

BITS 7,6,5
These bits are Read/Write and select the Mode.

BIT 4 nErrIntrEn
Read/Write (Valid only in ECP Mode)
1: Disables the interrupt generated on the asserting edge of nFault.
0: Enables an interrupt pulse on the high to low edge of nFault. Note that an interrupt will be generated if nFault is asserted (interrupting) and this bit is written from a 1 to a 0. This prevents interrupts from being lost in the time between the read of the ecr and the write of the ecr.

BIT 3 dmaEn
Read/Write
1: Enables DMA (DMA starts when serviceIntr is 0).
0: Disables DMA unconditionally.

BIT 2 serviceIntr
Read/Write
1: Disables DMA and all of the service interrupts.
0: Enables one of the following 3 cases of interrupts. Once one of the 3 service interrupts has occurred serviceIntr bit shall be set to a 1 by hardware, it must be reset to 0 to re-enable the interrupts. Writing this bit to a 1 will not cause an interrupt.
case dmaEn=1:
During DMA (this bit is set to a 1 when terminal count is reached).
case dmaEn=0 direction=0:
This bit shall be set to 1 whenever there are writeIntrThreshold or more bytes free in the FIFO.
case dmaEn=0 direction=1:
This bit shall be set to 1 whenever there are readIntrThreshold or more valid bytes to be read from the FIFO.

BIT 1 full
Read only
1: The FIFO cannot accept another byte or the FIFO is completely full.
0: The FIFO has at least 1 free byte.

BIT 0 empty
Read only
1: The FIFO is completely empty.
0: The FIFO contains at least 1 byte of data.

Downloaded from Arrow.com.

Table 41 - Extended Control Register

R/W	MODE
000:	Standard Parallel Port mode . In this mode the FIFO is reset and common collector drivers are used on the control lines (nStrobe, nAutoFd, nInit and nSelectIn). Setting the direction bit will not tri-state the output drivers in this mode.
001:	PS/2 Parallel Port mode. Same as above except that direction may be used to tri-state the data lines and reading the data register returns the value on the data lines and not the value in the data register. All drivers have active pull-ups (push-pull).
010:	Parallel Port FIFO mode. This is the same as 000 except that bytes are written or DMAed to the FIFO. FIFO data is automatically transmitted using the standard parallel port protocol. Note that this mode is only useful when direction is 0. All drivers have active pull-ups (push-pull).
011:	ECP Parallel Port Mode. In the forward direction (direction is 0) bytes placed into the ecpDFifo and bytes written to the ecpAFifo are placed in a single FIFOand transmitted automatically to the peripheral using ECP Protocol. In the reverse direction (direction is1) bytes are moved from the ECP parallel port and packed into bytes in the ecpDFifo. All drivers have active pull-ups (push-pull).
100:	Selects EPP Mode: In this mode, EPP is selected if the EPP supported option is selected in configuration register CR4. All drivers have active pull-ups (push-pull).
101:	Reserved
110:	Test Mode. In this mode the FIFO may be written and read, but the data will not be transmitted on the parallel port. All drivers have active pull-ups (push-pull).
111:	Configuration Mode. In this mode the confgA, confgB registers are accessible at 0x400 and 0x401. All drivers have active pull-ups (push-pull).

Downloaded from Arrow.com.

OPERATION

Mode Switching/Software Control

Software will execute P1284 negotiation and all operation prior to a data transfer phase under programmed I/O control (mode 000 or 001). Hardware provides an automatic control line handshake, moving data between the FIFO and the ECP port only in the data transfer phase (modes 011 or 010).

Setting the mode to 011 or 010 will cause the hardware to initiate data transfer.

If the port is in mode 000 or 001 it may switch to any other mode. If the port is not in mode 000 or 001 it can only be switched into mode 000 or 001. The direction can only be changed in mode 001.

Once in an extended forward mode the software should wait for the FIFO to be empty before switching back to mode 000 or 001. In this case all control signals will be deasserted before the mode switch. In an ecp reverse mode the software waits for all the data to be read from the FIFO before changing back to mode 000 or 001. Since the automatic hardware ecp reverse handshake only cares about the state of the FIFO it may have acquired extra data which will be discarded. It may in fact be in the middle of a transfer when the mode is changed back to 000 or 001. In this case the port will deassert nAutoFd independent of the state of the transfer. The design shall not cause glitches on the handshake signals if the software meets the constraints above.

ECP Operation

Prior to ECP operation the Host must negotiate on the parallel port to determine if the peripheral supports the ECP protocol. This is a somewhat complex negotiation carried out under program control in mode 000.

After negotiation, it is necessary to initialize some of the port bits. The following are required:

- Set Direction = 0, enabling the drivers.
- Set strobe = 0, causing the nStrobe signal to default to the deasserted state.
- Set autoFd = 0, causing the nAutoFd signal to default to the deasserted state.
- Set mode = 011 (ECP Mode)

ECP address/RLE bytes or data bytes may be sent automatically by writing the ecpAFifo or ecpDFifo respectively.

Note that all FIFO data transfers are byte wide and byte aligned. Address/RLE transfers are byte-wide and only allowed in the forward direction.

The host may switch directions by first switching to mode = 001, negotiating for the forward or reverse channel, setting direction to 1 or 0, then setting mode = 011. When direction is 1 the hardware shall handshake for each ECP read data byte and attempt to fill the FIFO. Bytes may then be read from the ecpDFifo as long as it is not empty .

ECP transfers may also be accomplished (albeit slowly) by handshaking individual bytes under program control in mode = 001, or 000.

Termination from ECP Mode

Termination from ECP Mode is similar to the termination from Nibble/Byte Modes. The host is permitted to terminate from ECP Mode only in specific well-defined states. The termination can only be executed while the bus is in the forward direction. To terminate while the channel is in the reverse direction, it must first be transitioned into the forward direction.

Downloaded from Arrow.com.

Command/Data

ECP Mode supports two advanced features to improve the effectiveness of the protocol for some applications. The features are implemented by allowing the transfer of normal 8-bit data or 8-bit commands.

When in the forward direction, normal data is transferred when HostAck is high and an 8 bit command is transferred when HostAck is low.

The most significant bit of the command indicates whether it is a run-length count (for compression) or a channel address.

When in the reverse direction, normal data is transferred when PeriphAck is high and an 8-bit command is transferred when PeriphAck is low. The most significant bit of the command is always zero. Reverse channel addresses are seldom used and may not be supported in hardware.

Table 42
Forward Channel Commands (HostAck Low)
Reverse Channel Commands (PeripAck Low)

D7	D[6:0]
0	Run-Length Count (0-127) (mode 0011 0X00 only)
1	Channel Address (0-127)

Data Compression

The FDC37C669 supports run length encoded (RLE) decompression in hardware and can transfer compressed data to a peripheral. Run length encoded (RLE) compression in hardware is not supported. To transfer compressed data in ECP mode, the compression count is written to the ecpAFifo and the data byte is written to the ecpDFifo.

Compression is accomplished by counting identical bytes and transmitting an RLE byte that indicates how many times the next byte is to be repeated. Decompression simply intercepts the RLE byte and repeats the following byte the specified number of times. When a run-length count is received from a peripheral, the subsequent data byte is replicated the specified number of times. A run-length count of zero specifies that only one byte of data is represented by the next data byte, whereas a run-length count of 127 indicates that the next byte should be expanded to 128 bytes. To prevent data expansion, however, run-length counts of zero should be avoided.

Pin Definition

The drivers for nStrobe, nAutoFd, nInit and nSelectIn are open-collector in mode 000 and are push-pull in all other modes.

ISA Connections

The interface can never stall causing the host to hang. The width of data transfers is strictly controlled on an I/O address basis per this specification. All FIFO-DMA transfers are byte wide, byte aligned and end on a byte boundary. (The PWord value can be obtained by reading Configuration Register A, cnfgA, described in the next section). Single byte wide transfers

Downloaded from Arrow.com.

are always possible with standard or PS/2 mode using program control of the control signals.

Interrupts

The interrupts are enabled by **serviceIntr** in the **ecr** register.

serviceIntr = 1 Disables the DMA and all of the service interrupts.

serviceIntr = 0 Enables the selected interrupt condition. If the interrupting condition is valid, then the interrupt is generated immediately when this bit is changed from a 1 to a 0. This can occur during Programmed I/O if the number of bytes removed or added from/to the FIFO does not cross the threshold.

The interrupt generated is ISA friendly in that it must pulse the interrupt line low, allowing for interrupt sharing. After a brief pulse low following the interrupt event, the interrupt line is tri-stated so that other interrupts may assert.

An interrupt is generated when:

1. For DMA transfers: When **serviceIntr** is 0, dmaEn is 1 and the DMA TC is received.

2. For Programmed I/O:
   a. When **serviceIntr** is 0, dmaEn is 0, direction is 0 and there are writeIntrThreshold or more free bytes in the FIFO. Also, an interrupt is generated when **serviceIntr** is cleared to 0 whenever there are writeIntrThreshold or more free bytes in the FIFO.
   b. (1) When **serviceIntr** is 0, dmaEn is 0, direction is 1 and there are readIntrThreshold or more bytes in the FIFO. Also, an interrupt is generated when **serviceIntr** is cleared to 0 whenever there are readIntrThreshold or more bytes in the FIFO.

3. When nErrIntrEn is 0 and nFault transitions from high to low or when nErrIntrEn is set from 1 to 0 and nFault is asserted.

4. When ackIntEn is 1 and the nAck signal transitions from a low to a high.

FIFO Operation

The FIFO threshold is set in the chip configuration registers. All data transfers to or from the parallel port can proceed in DMA or Programmed I/O (non-DMA) mode as indicated by the selected mode. The FIFO is used by selecting the Parallel Port FIFO mode or ECP Parallel Port Mode. (FIFO test mode will be addressed separately). After a reset, the FIFO is disabled. Each data byte is transferred by a Programmed I/O cycle or PDRQ depending on the selection of DMA or Programmed I/O mode.

The following paragraphs detail the operation of the FIFO flow control. In these descriptions, <threshold> ranges from 1 to 16. The parameter FIFOTHR, which the user programs, is one less and ranges from 0 to 15.

A low threshold value (i.e. 2) results in longer periods of time between service requests, but requires faster servicing of the request for both read and write cases. The host must be very responsive to the service request. This is the desired case for use with a "fast" system.

Downloaded from Arrow.com.

A high value of threshold (i.e. 12) is used with a "sluggish" system by affording a long latency period after a service request, but results in more frequent service requests.

DMA TRANSFERS

Note: **PDRQ** - Currently selected Parallel Port DRQ channel
nPDACK - Currently selected Parallel Port DACK channel
PINTR - Currently selected Parallel Port IRQ channel

DMA transfers are always to or from the ecpDFifo, tFifo or CFifo. DMA utilizes the standard PC DMA services. To use the DMA transfers, the host first sets up the direction and state as in the programmed I/O case. Then it programs the DMA controller in the host with the desired count and memory address. Lastly it sets dmaEn to 1 and **serviceIntr** to 0. The ECP requests DMA transfers from the host by activating the PDRQ pin. The DMA will empty or fill the FIFO using the appropriate direction and mode. When the terminal count in the DMA controller is reached, an interrupt is generated and serviceIntr is asserted, disabling DMA. In order to prevent possible blocking of refresh requests dReq shall not be asserted for more than 32 DMA cycles in a row. The FIFO is enabled directly by asserting nPDACK and addresses need not be valid. PINTR is generated when a TC is received. PDRQ must not be asserted for more than 32 DMA cycles in a row. After the 32nd cycle, PDRQ must be kept unasserted until nPDACK is deasserted for a minimum of 350nsec. (Note: The only way to properly terminate DMA transfers is with a TC).

DMA may be disabled in the middle of a transfer by first disabling the host DMA controller. Then setting serviceIntr to 1, followed by setting dmaEn to 0, and waiting for the FIFO to become empty or full.

Restarting the DMA is accomplished by enabling DMA in the host, setting dmaEn to 1, followed by setting serviceIntr to 0.

DMA Mode - Transfers from the FIFO to the Host

(Note: In the reverse mode, the peripheral may not continue to fill the FIFO if it runs out of data to transfer, even if the chip continues to request more data from the peripheral.)

he ECP activates the PDRQ pin whenever there is data in the FIFO. The DMA controller must respond to the request by reading data from the FIFO. The ECP will deactivate the PDRQ pin when the FIFO becomes empty or when the TC becomes true (qualified by nPDACK), indicating that no more data is required. PDRQ goes inactive after nPDACK goes active for the last byte of a data transfer (or on the active edge of nIOR, on the last byte, if no edge is present on nPDACK). If PDRQ goes inactive due to the FIFO going empty, then PDRQ is active again as soon as there is one byte in the FIFO. If PDRQ goes inactive due to the TC, then PDRQ is active again when there is one byte in the FIFO, and **serviceIntr** has been re-enabled. (Note: A data underrun may occur if PDRQ is not removed in time to prevent an unwanted cycle.)

Programmed I/O Mode or Non-DMA Mode

The ECP or parallel port FIFOs may also be operated using interrupt driven programmed I/O. Software can determine the writeIntrThreshold, readIntrThreshold, and FIFO depth by accessing the FIFO in Test Mode.

Programmed I/O transfers are to the ecpDFifo at 400H and ecpAFifo at 000H or from the ecpDFifo located at 400H, or to/from the tFifo at 400H. To use the programmed I/O transfers, the host first sets up the direction and state, sets dmaEn to 0 and **serviceIntr** to 0.

Downloaded from Arrow.com.

The ECP requests programmed I/O transfers from the host by activating the PINTR pin. The programmed I/O will empty or fill the FIFO using the appropriate direction and mode.

Note: A threshold of 16 is equivalent to a threshold of 15. These two cases are treated the same.

Programmed I/O - Transfers from the FIFO to the Host

In the reverse direction an interrupt occurs when serviceIntr is 0 and readIntrThreshold bytes are available in the FIFO. If at this time the FIFO is full it can be emptied completely in a single burst, otherwise readIntrThreshold bytes may be read from the FIFO in a single burst.

readIntrThreshold = (16-<threshold>) data bytes in FIFO

An interrupt is generated when **serviceIntr** is 0 and the number of bytes in the FIFO is greater than or equal to (16-<threshold>). (If the threshold = 12, then the interrupt is set whenever there are 4-16 bytes in the FIFO). The PINT pin can be used for interrupt-driven systems. The host must respond to the request by reading data from the FIFO. This process is repeated until the last byte is transferred out of the FIFO. If at this time the FIFO is full, it can be completely emptied in a single burst, otherwise a minimum of (16-<threshold>) bytes may be read from the FIFO in a single burst.

Programmed I/O - Transfers from the Host to the FIFO

In the forward direction an interrupt occurs when serviceIntr is 0 and there are writeIntrThreshold or more bytes free in the FIFO. At this time if the FIFO is empty it can be filled with a single burst before the empty bit needs to be re-read. Otherwise it may be filled with writeIntrThreshold bytes.

writeIntrThreshold = (16-<threshold>) free bytes in FIFO

An interrupt is generated when **serviceIntr** is 0 and the number of bytes in the FIFO is less than or equal to <threshold>. (If the threshold = 12, then the interrupt is set whenever there are 12 or less bytes of data in the FIFO). The PINT pin can be used for interrupt-driven systems. The host must respond to the request by writing data to the FIFO. If at this time the FIFO is empty, it can be completely filled in a single burst, otherwise a minimum of (16-<threshold>) bytes may be written to the FIFO in a single burst. This process is repeated until the last byte is transferred into the FIFO.

Downloaded from Arrow.com.

AUTO POWER MANAGEMENT

Power management capabilities are provided for the following logical devices: floppy disk, UART 1, UART 2 and the parallel port. For each logical device, two types of power management are provided; direct powerdown and auto powerdown.

Direct powerdown is controlled by the powerdown bits in the configuration registers. One bit is provided for each logical device. Auto Powerdown can be enabled for each logical device by setting the Auto Powerdown Enable bit in the configluration registers. In addition, a chip powerdown has been provided by using the POWERGOOD pin. Refer to the description of the POWERGOOD pin for more information.

FDC Power Management

Direct power management is controlled by bit 3 of Configuration Register 0(CR0). Refer to CR0 bit 3 for more information.

Auto Power Management is enabled by CR7 bit 7. When set, this bit allows FDC to enter powerdown when all of the following conditions have been met:

1. The motor enable pins of register DOR (3F2H/372H) are inactive (zero).
2. The part must be idle; MSR=80H and INT = 0 (INT may be high even if MSR = 80H due to polling interrupts).
3. The internal head unload timer must have expired.
4. The Auto powerdown timer (10msec) must have timed out.

An internal timer is initiated as soon as the auto powerdown command is enabled. The part is then powered down when all the conditions are met. During the countdown of the powerdown timer, any operation of read MSR or read/write data (FIFO) will reinitiate the timer.

Disabling the auto powerdown mode cancels the timer and holds the FDC37C669 out of auto powerdown.

DSR From Powerdown

If DSR powerdown is used when the part is in auto powerdown, the DSR powerdown will override the auto powerdown. However, when the part is awakened from DSR powerdown, the auto powerdown will once again become effective.

Wake Up From Auto Powerdown

If the part enters the powerdown state through the auto powerdown mode, then the part can be awakened by reset or by appropriate access to certain registers.

If a hardware or software reset is used then the part will go through the normal reset sequence. If the access is through the selected registers, then the FDC37C669 resumes operation as though it was never in powerdown. Besides activating the RESET pin or one of the software reset bits in the DOR or DSR, the following register accesses will wake up the part:

1. Enabling any one of the motor enable bits in the DOR register (reading the DOR does not awaken the part).
2. A read from the MSR register.
3. A read or write to the Data register.

Downloaded from Arrow.com.

Once awake, the FDC37C669 will reinitiate the auto powerdown timer for 10 ms. The part will powerdown again when all the powerdown conditions are satisfied.

Register Behavior

Table 43 reiterates the AT and PS/2 (including modes 30) configuration registers available. It also shows the type of access permitted. In order to maintain software transparency, access to all the registers must be maintained. As Table 43 shows, two sets of registers are distinguished based on whether their access results in the part remaining in powerdown state or exiting it.

Access to all other registers is possible without awakening the part. These registers can be accessed during powerdown without changing the status of the part. A read from these registers will reflect the true status as shown in the register description in the FDC description. A write to the part will result in the part retaining the data and subsequently reflecting it when the part awakens. Accessing the part during powerdown may cause an increase in the power consumption by the part. The part will revert back to its low power mode when the access has been completed.

Pin Behavior

The FDC37C669 is specifically designed for portable PC systems in which power conservation is a primary concern. This makes the behavior of the pins during powerdown very important.

The pins of the FDC37C669 can be divided into two major categories: system interface and floppy disk drive interface. The floppy disk drive pins are disabled so that no power will be drawn through the part as a result of any voltage applied to the pin within the part's power supply range. Most of the system interface pins are left active to monitor system accesses that may wake up the part.

System Interface Pins

Table 44 gives the state of the system interface pins in the powerdown state. Pins unaffected by the powerdown are labeled "Unchanged". Input pins are "Disabled" to prevent them from causing currents internal to the FDC37C669 when they have indeterminate input values.

Downloaded from Arrow.com.

Table 43 - PC/AT and PS/2 Available Registers

Base + Address	Available Registers		Access Permitted
	PC-AT	PS/2 (Model 30)	
Access to these registers DOES NOT wake up the part			
00H	----	SRA	R
01H	----	SRB	R
02H	DOR (1)	DOR (1)	R/W
03H	---	---	---
04H	DSR (1)	DSR (1)	W
06H	---	---	---
07H	DIR	DIR	R
07H	CCR	CCR	W
Access to these registers wakes up the part			
04H	MSR	MSR	R
05H	Data	Data	R/W

Note 1: Writing to the DOR or DSR does not wake up the part, however, writing any of the motor enable bits or doing a software reset (via DOR or DSR reset bits) will wake up the part.

Table 44 - State of System Pins in Auto Powerdown

System Pins	State in Auto Powerdown
Input Pins	
IOR	Unchanged
IOW	Unchanged
A[0:9]	Unchanged
D[0:7]	Unchanged
RESET	Unchanged
IDENT	Unchanged
DACK	Unchanged
TC	Unchanged
Output Pins	
FINTR	Unchanged (low)
DB[0:7]	Unchanged
FDRQ	Unchanged (low)

Downloaded from Arrow.com.

FDD Interface Pins

All pins in the FDD interface which can be connected directly to the floppy disk drive itself are either DISABLED or TRISTATED. Pins used for local logic control or part programming are unaffected. Table 47 depicts the state of the floppy disk drive interface pins in the powerdown state.

Table 45 - State of Floppy Disk Drive Interface Pins in Powerdown

FDD Pins	State in Auto Powerdown
Input Pins	
RDATA	Input
WP	Input
TRK0	Input
INDX	Input
DRV2	Input
DSKCHG	Input
Output Pins	
MOTEN[0:3]	Tristated
DS[0:3}	Tristated
DIR	Active
STEP	Active
WRDATA	Tristated
WE	Tristated
HDSEL	Active
DENSEL	Active
DRATE[0:1]	Active

Downloaded from Arrow.com.

UART Power Management

Direct power management is controlled by CR2 bits 3 and 7. Refer to CR2 bits 3 and 7 for more information.

Auto Power Management is enabled by CR7 bits 5 and 6. When set, these bit allows the following auto power management operations:

1. The transmitter enters auto powerdown when the transmit buffer and shift register are empty.

2. The receiver enters powerdown when the following conditions are all met:

   a. Receive FIFO is empty
   b. The receiver is waiting for a start bit.

Note: While in powerdown the Ring Indicator interrupt is still valid and transitions when the RI input changes.

Exit Auto Powerdown

The transmitter exits powerdown on a write to the XMIT buffer. The receiver exits auto powerdown when RXDx changes state.

Parallel Port

Direct power management is controlled by CR1 bit 2. Refer to CR1 bit 2 for more information.

Auto Power Management is enabled by CR7 bit 4. When set, this bit allows the ECP or EPP logical parallel port blocks to be placed into powerdown when not being used.

The EPP logic is in powerdown under any of the following conditions:

1. EPP is not enabled in the configuration registers.

2. EPP is not selected through ecr while in ECP mode.

The ECP logic is in powerdown under any of the following conditions:

1. ECP is not enabled in the configuration registers.

2 SPP, PS/2 Parallel port or EPP mode is selected through ecr while in ECP mode.

Exit Auto Powerdown

The parallel port logic can change powerdown modes when the ECP mode is changed through the ecr register or when the parallel port mode is changed through the configuration registers.

Downloaded from Arrow.com.

INTEGRATED DRIVE ELECTRONICS INTERFACE

The IDE interface enables hard disks with embedded controllers (AT and XT) to be interfaced to the host processor. The following definitions are for reference only. These registers are not implemented in the FDC37C669. Access to these registers is controlled by the FDC37C669. For more information, refer to the IDE pin descriptions and the ATA specification.

HOST FILE REGISTERS

The HOST FILE REGISTERS are accessed by the AT Host, rather than the Local Processor. There are two groups of registers, the AT Task File, and the Miscellaneous AT Registers.

ADDRESS (CR21) Base +[0:7]

These AT registers contain the Task File Registers. These registers communicate data, command, and status information with the AT host, and are addressed when nHDCS0 is low.

ADDRESS (CR22) Base +6

This AT register may be used by the BIOS for drive control. It is accessed by the AT interface when nHDSC1 is active.

Figure 2 shows the AT Host Register Map of the FDC37C669.

REGISTER ADDRESS	
(CR21) IDE BASE I/O ADDRESS +[0:7]	TASK FILE REGISTERS
(CR22) BASE I/O ADDRESS +6	MISC AT REGISTER

FIGURE 2 - HOST PROCESSOR REGISTER ADDRESS MAP (AT MODE)

TASK FILE REGISTERS

Task File Registers may be accessed by the host AT when pin nHDCS0 is active (low). The Data Register (1F0H) is 16 bits wide; the remaining task file registers are 8 bits wide. The task file registers are ATA and EATA compatible. Please refer to the ATA and EATA specifications. These are available from:

Global Engineering
2805 McGaw Street
Irvine, CA 92714
(800) 854-7179
(714) 261-1455

Downloaded from Arrow.com.

COMMAND	D7	D6	D5	D4	D3	D2	D1	D0
RESTORE (RECALIBRATE)	0	0	0	1	r	r	r	r
SEEK	0	1	1	1	r	r	r	r
READ SECTOR	0	0	1	0	D	0	L	T
WRITE SECTOR	0	0	1	1	D	0	L	T
FORMAT TRACK	0	1	0	1	D	0	0	0
READ VERIFY	0	1	0	0	D	0	0	T
DIAGNOSE	1	0	0	1	0	0	0	0
SET PARAMETERS	1	0	0	1	0	0	0	1

Bit definitions:

r: specifies the step rate to be used for the command.
D: If set, 16 bit DMA is to be used for the data transfer. (Optional for high performance)
L: If set, the ECC will be transferred following the data.
T: if set, retries are inhibited for the command.

Downloaded from Arrow.com.

Downloaded from Arrow.com.

ADDR	R/W	D15	D14	D13	D12	D11	D10	D9	D8	D7	D6	D5	D4	D3	D2	D1	D0	NAME
000H	DATA REGISTER (REDIRECTED TO FIFO)																	DATA REG

ADDR	R/W	D7	D6	D5	D4	D3	D2	D1	D0	NAME
001H	R	BB	CRC	-	ID	-	AC	TK	DM	ERROR FLAGS
001H	W	CYLINDER NUMBER +4								WRITE PRECOMP CYLINDER
002H	R/W	NUMBER OF SECTORS								SECTOR COUNT
003H	R/W	SECTOR NUMBER								SECTOR NUMBER
004H	R/W	CYLINDER NUMBER (LSB's)								CYLINDER LOW
005H	R/W	CYLINDER NUMBER (MSB's)								CYLINDER HIGH
006H	R/W	-	-	DRIVE		HEAD				HEAD, DRIVE
007H	R	BSY	RDY	WF	SC	DRQ	CD	INDEX	ERR	STATUS
007H	W	COMMAND								COMMAND

Downloaded from Arrow.com.

ADDR	R/W	D7	D6	D5	D4	D3	D2	D1	D0	NAME
3F6H /376H	R	BSY	RDY	WF	SC	DRQ	CD	INDEX	ERR	ERROR FLAGS
3F6H /376H	W	RESERVED				HS3EN	ADPTR RESET	DISABLE IRQ	RE-SERVED	FIXED DISK

3F7H /377H	R	-	nWG	nHS3	nHS2	nHS1	nHS0	nDS1	nDS0	DIGITAL INPUT
3F7H /377H	W	-	-	-	-	-	-	-	-	RESERVED

CONFIGURATION

The configuration of the chip is programmable through software selectable configuration registers.

CONFIGURATION REGISTER ADDRESS

The address at which the Configuration Registers are located is controlled by the nRTS2 pin. The state of the nRTS2 pin is latched by the trailing edge of hardware reset. If this latched state is a 0, the Configuration Registers are located at address 3F0H-3F1H. If the latched state is a 1, then the Configuration Registers are located at address 370H-371H.

CONFIGURATION REGISTERS

The configuration registers are used to select programmable options of the chip. After power up, the chip is in the default mode. The default modes are identified in the Configuration Mode Register Description. To program the configuration registers, the following sequence must be followed:

1. Enter Configuration Mode.
2. Configure the Configuration Registers.
3. Exit Configuration Mode.

Enter Configuration Mode

To enter the configuration mode, two writes in succession to port 3F0H (or 370H) with 55H data are required. If a write to another address or port occurs between these two writes, the chip does not enter the configuration mode. It is strongly recommended that interrupts be disabled for the duration of these two writes.

Configuration Mode

The chip contains configuration registers CR00-CR29. These registers are accessed by first writing the number (0-29H) of the desired register to port 3F0H (or 370H) and then writing or reading the configuration register through port 3F1H (or 371H).

Exit Configuration Mode

The configuration mode is exited by writing an AAH to port 3F0H (or 370H).

Programming Example

The following is an example of a configuration program in Intel 8086 assembly language.

Downloaded from Arrow.com.

```
;-----------------------------.
; ENTER CONFIGURATION MODE     |
;-----------------------------'
MOV   DX,3F0H
MOV   AX,055H     ;
CLI               ; disable interrupts
OUT   DX,AL
OUT   DX,AL
STI               ; enable interrupts
;-----------------------------.
; CONFIGURE REGISTERS CR0-CRx  |
;-----------------------------'
MOV   DX,3F0H
MOV   AL,00H
OUT   DX,AL ; Point to CR0
MOV   DX,3F1H
MOV   AL,3FH
OUT   DX,AL ; Update CR0
;
MOV   DX,3F0H     ;
MOV   AL,01H
OUT   DX,AL ; Point to CR1
MOV   DX,3F1H
MOV   AL,9FH
OUT   DX,AL ; Update CR1
;
; Repeat for all CRx registers
;
;-----------------------------.
; EXIT CONFIGURATION MODE      |
;-----------------------------'
MOV   DX,3F0H
MOV   AX,0AAH
OUT   DX,AL
```


Downloaded from Arrow.com.

Table 46 - Configuration Registers

Default		DB7	DB6	DB5	DB4	DB3	DB2	DB1	DB0
28H	CR00	Valid	Reserved			FDC PWR	Reserved	IDE EN	
9CH	CR01	Lock CRx	Reserved			PP MODE	PP PWR	Reserved	
88H	CR02	UART2 PWR	Reserved			UART1 PWR	Reserved		
78H	CR03	ADRX/ DRV2/ IRQ_B	IDENT	MFM	DRVDEN 1	Reserved	ADRX/ DRV2/ IRQ_B	Enhanced FDC Mode 2	PWRGD/ GAMECS
00H	CR04	ALT I/O	EPP Type	MIDI 2	MIDI 1	Parallel Port FDC		PP Ext. Modes	
00H	CR05	Reserved	EXTx4	DRV 0X1	DEN SEL		DMA Mode	Reserved	
FFH	CR06	Floppy Drive D		Floppy Drive C		Floppy Drive B		Floppy Drive A	
00H	CR07	Auto Power Management				Reserved		Floppy Boot Drive	
00H	CR08	ADRA7	ARDA6	ADRA5	ADRA4	0	0	0	0
00H	CR09	ADRx Config		Reserved			ADRA10	ADRA9	ADRA8
00H	CR0A	Reserved				ECP FIFO Threshold			
00H	CR0B	FDD3-DRTx		FDD2-DRTx		FDD1-DRTx		FDD0-DRTx	
00H	CR0C	UART 2 Speed	UART 1 Speed	UART 2 Mode			UART 2 Duplex	UART 2 XMIT Polarity	UART 2 RCV Polarity
03H	CR0D	Device ID							
02H	CR0E	Device Revision							
00H	CR0F	Test 7	Test 6	Test 5	Test 4	Test 3	Test 2	Test 1	Test 0
00H	CR10	IR_Test	PLL_Clk	AceStop	Pll Stop	Pll Gain	Reserved		
00H	CR11	Reserved						Test 10ms	IR loop Back
00H	CR12-CR1D	Reserved							
3CH	CR1E	**GAMECS - ADR[9:4]**						**GAMECS Config**	
00H	CR1F	**FDD3-DTx**		**FDD2-DTx**		**FDD1-DTx**		**FDD0-DTx**	
3CH	CR20	FDC - ADR[9:4]						0	0
3CH	CR21	IDE - nHDCS0 - ADR[9:4]						0	0
3DH	CR22	IDE - nHDCS1 - ADR[9:4]						0	1
00H	CR23	Parallel Port - ADR[9:2]							
00H	CR24	Serial Port 1 - ADR[9:3]							0
00H	CR25	Serial Port 2 - ADR[9:3]							0
00H	CR26	FDC DRQ				Parallel Port DRQ			
00H	CR27	FDC IRQ				Parallel Port IRQ			
00H	CR28	Serial 1 IRQ				Serial 2 IRQ			
00H	CR29	Reserved				IRQIN IRQ			

Downloaded from Arrow.com.

Configuration Register Description

The configuration registers consist of the Configuration Select Register (CSR) and Configuration Registers CR-00 -CR-29. The configuration select register is written to by writing to port 3F0H (or 370H). The Configuration Registers CR-00; CR-29 are accessed by reading or writing to port 3F1H (or 371H).

Configuration Select Register (CSR)
This register can only be accessed when the chip is in the Configuration Mode. This register, located at port 3F0H (370H), must be initialized upon entering the Configuration Mode before the configuration registers can be accessed and is used to select which of the Configuration Registers are to be accessed at port 3F1H (371H).

Configuration Registers CR00 -CR29
These registers are set to their default values at power up and are not affected by RESET (except where explicitly defined that a hardware reset causes that bit to be reset to default). They are accessed at port 3F1H (or 371H). Refer to the following descriptions for the function of each configuration register.

CR00
This register can only be accessed when the chip is in the Configuration Mode and after the CSR has been initialized to 00H. The default value of this register after power up is 28H.

Table 47 - CR00

BIT NO.	BIT NAME	DESCRIPTION
0, 1	IDE ENABLE/ Alternate Function	Bits (Note 1) 10 00 - IDE, IRRX2, IRTX2, IRQ_H disabled (Default) 01 - Reserved (IDE, IRRX2, IRTX2, IRQ_H disabled) 10 - IDE Enabled 11 - IRRX2, IRTX2, IRQ_H Enabled
2	Reserved	Read only. Read as 0
3	FDC Power (see note _PWRDN)	A high level on this bit, supplies power to the FDC (default). A low level on this bit puts the FDC in low power mode.
4,5,6	Reserved	Read only. A read returns bit 5 as a 1 and bits 4 and 6 as a 0.
7	Valid	A high level on this software controlled bit can be used to indicate that a valid configuration cycle has occurred. The control software must take care to set this bit at the appropriate times. Set to zero after power up. This bit has no effect on any other hardware in the chip.

Note 1: When "0x" is selected, 30ua pull-ups are active on the "nIDEEN, nHDCS0 and nHDCS1 pins", at all other times, the pull-ups are disabled.
When "11" is selected, IRQ_H is available as an IRQ output, and IRRX2 and IRTX2 are available as alternate IR pins (pull-ups disabled). When "10" is selected, nIDEEN, nHDCS0 and nHDCS1 are used to control the IDE interface (pull-ups disabled).

Downloaded from Arrow.com.

CR01

This register can only be accessed in the Configuration Mode and after the CSR has been initialized to 01H. The default value of this register after power up is 9CH.

Table 48 - CR01

BIT NO.	BIT NAME	DESCRIPTION
0,1	Reserved	Read Only. A read returns a 0.
2	Parallel Port Power (see note _PWRDN)	A high level on this bit, supplies power to the Parallel Port (Default). A low level on this bit puts the Parallel Port in low power mode.
3	Parallel Port Mode	Parallel Port Mode. A high level on this bit, sets the Parallel Port for Printer Mode (Default). A low level on this bit enables the Extended Parallel port modes. Refer to Bits 0 and 1 of CR4
4	Reserved	Read Only. A read returns a 1.
5,6	Reserved	Read Only. A read returns a 0.
7	Lock CRx	A high level on this bit enables the reading and writing of CR00-CR18 (Default). A low level on this bit disables the reading and writing of CR0-CRF. Once set to 0, this bit can only be set to 1 by a hard reset or power-up reset.

CR02

This register can only be accessed in the Configuration Mode and after the CSR has been initialized to 02H. The default value of this register after power up is 88H.

Table 49 - CR02

BIT NO.	BIT NAME	DESCRIPTION
0:2	Reserved	Read Only. A read returns a 0.
3	UART1 Power down (see note _PWRDN)	A high level on this bit, allows normal operation of the Primary Serial Port (Default). A low level on this bit places the Primary Serial Port into Power Down Mode.
4:6	Reserved	Read Only. A read returns a 0.
7	UART2 Power down	A high level on this bit, allows normal operation of the Secondary Serial Port (Default). A low level on this bit places the Secondary Serial Port into Power Down Mode.

Note_PWRDN: Power Down bits disable the respective logical device and associated pins, however the power down bit does not disable the selected address range registers for the logical device. To disable the host address registers the logical device's base address must be set below 100h. Therefore devices which are powered down, but still reside at a valid I/O base address will participate in Plug-and-Play range checking.

Downloaded from Arrow.com.

CR03

This register can only be accessed in the Configuration Mode and the CSR has been initialized to 03H. The default value after power up is 780H.

Table 50 - CR03

BIT NO.	BIT NAME	DESCRIPTION		
0	PWRGD/ GAMECS	Bit 0 0 1	Pin function PWRGD (default) GAMECS	
1	Enhanced Floppy Mode 2	Bit 1	Floppy Mode - Refer to the description of the TAPE DRIVE REGISTER (TDR) for more information on these modes.	
		0	NORMAL Floppy Mode (Default)	
		1	Enhanced Floppy Mode 2 (OS2)	
3	Reserved	Reserved - Read as zero		
4	DRVDEN1	Bit 4 0 1	 Pin DRVDEN1 output DRVDEN 1 output DRVDEN 1 high (default)	
5	MFM	IDENT is used in conjunction with MFM to define the interface mode of operation		
6	IDENT	**IDENT**	**MFM**	**MODE**
		1	1	AT Mode (Default)
		1	0	Reserved
		0	1	PS/2
		0	0	Model 30
7,2	ADRx/ DRV2 EN/ IRQ_B	Bit - 7 0 1 1	Bit - 2 x 0 1	Pin 94 DRV2 (input) ADRX IRQ_B

Downloaded from Arrow.com.

CR04

This register can only be accessed in the Configuration Mode and the CSR has been initialized to 04H. The default value after power up is 00H.

Table 51 - CR04 - Parallel and Serial Extended Setup Register

BIT NO.	BIT NAME	DESCRIPTION		
1,0	Parallel Port Extended Modes	Bit 1	Bit 0	If CR1 bit 3 is a low level then:
		0	0	Standard and Bidirectional Modes (SPP) (Default)
		0	1	EPP Mode and SPP
		1	0	ECP Mode (Note CR4_2)
		1	1	ECP Mode & EPP Mode (Note CR4_1, 2)
2,3	Parallel Port FDC	Refer to Parallel Port Floppy Disk Controller description.		
		Bit 3	Bit 2	
		0	0	Normal
		0	1	PPFD1
		1	0	PPFD2
		1	1	Reserved
4	MIDI 1	Serial Clock Select Port 1: A low level on this bit, disables MIDI support, clock = divide by 13 (Default). A high level on this bit enables MIDI support, clock = divide by 12. (Note CR4_3)		
5	MIDI 2	Serial Clock Select Port 2: A low level on this bit, disables MIDI support, clock = divide by 13 (Default). A high level on this bit enables MIDI support, clock = divide by 12. (Note CR4_3)		
6	EPP Type	0 = EPP 1.9 (Default) 1 = EPP 1.7		
7	ALT I/O	1 = use pins IRRX2, IRTX2 (pins 25, 26) 0 = use pins IRRX, IRTX (Default) (pins 88, 89) note: If this bit is set, the Infrared receive and transmit functions will not be available on pins 25 and 26 unless bits [0,1] of CR00 are set to [1,1].		

Note CR4_1: In this mode, EPP can be selected through the ecr register of ECP as mode 100.

Note CR4_2: In these modes, 2 drives can be supported directly, 3 or 4 drives must use external 4 drive support. SPP can be selected through the ecr register of ECP as mode 000.

Note CR4_3: MIDI Support: The Musical Instrumental Digital Interface (MIDI) operates at 31.25Kbaud (+/-1%) which can be derived from 125KHz. (24MHz/12=2MHz, 2MHz/16=125KHz).

Downloaded from Arrow.com.

CR05

This register can only be accessed in the Configuration Mode and the CSR has been initialized to 05H. The default value after power up is 00H.

Table 52 - CR05- Floppy Disk and IDE Extended Setup Register

BIT NO.	BIT NAME	DESCRIPTION		
0,1	Reserved	Read Only. A read returns a 0.		
2	FDC DMA Mode	0=(default) Burst mode is enabled for the FDC FIFO execution phase data transfers. 1=Non-Burst mode enabled. The FDRQ and FIRQ pins are strobed once for each byte transferred while the FIFO is enabled.		
4,3	DenSel	Bit 4	Bit 3	Densel output
		0	0	Normal (Default)
		0	1	Reserved
		1	0	1
		1	1	0
5	Swap Drv 0,1	A high level on this bit, swaps drives and motor sel 0 and 1 of the FDC. A low level on this bit does not (Default).		
6	EXTx4	External 4 drive support: 0=Internal 2 drive decoder (default). 1=External 4 drive decoder (External 2 to 4 decoder required).		
7	Reserved	Read Only. A read of this bit returns a 0		

CR06

This register can only be accessed in the Configuration Mode and after the CSR has been initialized to 06H. The default value of this register after power up is FFH. This register holds the floppy disk drive types for up to four floppy disk drives.

Downloaded from Arrow.com.

CR07

This register can only be accessed in the Configuration Mode and after the CSR has been initialized to 07H. The default value of this register after power up is 00H. This register holds the value for the auto power management, and floppy boot drive.

Table 53 - CR07

BIT NO.	BIT NAME	DESCRIPTION
0,1	Floppy Boot	This bit is used to define the boot floppy. 0 = Drive A (default) 1 = Drive B
2	Reserved	Read as 0.
3	Reserved	Read as 0.
4	Parallel Port Enable	This bit controls the AUTOPOWER DOWN feature of the Parallel Port. The function is: 0 = Auto powerdown disabled (default) 1 = Auto powerdown enabled This bit is reset to the default state by POR or a hardware reset.
5	UART 2 Enable	This bit controls the AUTOPOWER DOWN feature of the UART2. The function is: 0 = Auto powerdown disabled (default) 1 = Auto powerdown enabled This bit is reset to the default state by POR or a hardware reset.
6	UART 1 Enable	This bit controls the AUTOPOWER DOWN feature of the UART1. The function is: 0 = Auto powerdown disabled (default) 1 = Auto powerdown enabled This bit is reset to the default state by POR or a hardware reset.
7	Floppy Disk Enable	This bit controls the AUTOPOWER DOWN feature of the Floppy Disk. The function is: 0 = Auto powerdown disabled (default) 1 = Auto powerdown enabled This bit is reset to the default state by POR or a hardware reset.

Downloaded from Arrow.com.

CR08
This register can only be accessed in the Configuration Mode and after the CSR has been initialized to 08H. The default value of this register after power up is 00H. This is the lower 4 bits (ADRA7:4) for the ADRx address decode. The non-programmable address bits 3:0 default to 0000b.

CR09
This register can only be accessed in the Configuration Mode and after the CSR has been initialized to 09H. The default value of this register after power up is 00H. This is the upper 3 bits (ADRA10:8) (D2 - MSB, D0 - LSB) for the ADRx address decode. ADRx Config (bits 7:6) define the configuration of the ADRx decoder as follows:

D7	D6	ADRx Configuration
0	0	ADRx disabled
0	1	1 Byte decode A[3:0]=0000b
1	0	8 Byte block decode A[3:0]=0XXXb
1	1	16 byte block decode A[3:0]=XXXXb

Upper Address Decode requirements : nCS='0' is required to qualify the ADRx output.

CR0A
This register can only be accessed in the Configuration Mode and after the CSR has been initialized to 0AH. The default value of this register after power up is 00H. This byte defines the FIFO threshold for the ECP mode parallel port.

Table 54 - CR0A

D7	D6	D5	D4	D3	D2	D1	D0
RESERVED - READ ONLY 0 HEX				ECP F I F O T H R E S H O L D			
				THR3	THR2	THR1	THR0

CR0B
This register can only be ac1cessed in the Configuration Mode and after the CSR has been initialized to 0BH. The default value of this register after power up is 00H. This register indicates the data rate table used for each drive. Refer to CR1F for Drive Type register.

Table 55 - CR0B

FDD3		**FDD2**		**FDD1**		**FDD0**	
D7	D6	D5	D4	D3	D2	D1	D0
DRT1	DRT0	DRT1	DRT0	DRT1	DRT0	DRT1	DRT0

Downloaded from Arrow.com.

CR0C

This register can only be accessed in the Configuration Mode and after the CSR has been initialized to 0CH. The default value of this register after power up is 00H. This register controls the operating mode of the UART. This register is reset to the default state by a POR or a hardware reset.

Table 56 - CR0C

BIT NO.	BIT NAME	DESCRIPTION
0	UART 2 RCV Polarity	1 = RX input inverted. 0 = RX input non - inverted (default).
1	UART 2 XMIT Polarity	1 = TX output inverted. 0 = TX output non - inverted (default).
2	UART 2 Duplex	This bit is used to define the FULL/HALF DUPLEX operation of UART 2. 1 = Half duplex 0 = Full duplex (default)
3, 4, 5	UART 2 MODE	UART 2 Mode 5 4 3 0 0 0Standard (default) 0 0 1IrDA (HPSIR) 0 1 0Amplitude Shift Keyed IR @ 500Khz 0 1 1Reserved 1 x xReserved
6	UART 1 Speed	This bit enables the high speed mode of UART 1 = High speed enabled 0 = Standard (default)
7	UART Speed	This bit enables the high speed mode of UART 1 = High speed enabled 0 = Standard (default)

CR0D

This register can only be accessed in the Configuration Mode and after the CSR has been initialized to 0DH. This register is read only. This is the Device ID. The default value of this register after power up is 03H.

CR0E

This register can only be accessed in the Configuration Mode and after the CSR has been initialized to 0EH. This register is read only. The default value of this register after power up is 02H. This is used to identify the chip revision level.

Downloaded from Arrow.com.

CR0F

This register can only be accessed in the Configuration Mode and after the CSR has been initialized to 0FH. The default value of this register after power up is 00H.

Table 57 - CR0F

BIT NO.	BIT NAME	DESCRIPTION
0	Test 0	Reserved - Set to zero
1	Test 1	Reserved - Set to zero
2	Test 2	Reserved - Set to zero
3	Test 3	Reserved - Set to zero
4	Test 4	Reserved - Set to zero
5	Test 5	Reserved - Set to zero
6	Test 6	Reserved - Set to zero
7	Test 7	Reserved - Set to zero

Downloaded from Arrow.com.

CR10

This register can only be accessed in the Configuration Mode and after the CSR has been initialized to 10H. The default value of this register after power up is 00H.

Table 58 - CR10

BIT NO.	BIT NAME	DESCRIPTION
0 - 2	Reserved	Reserved - READ ONLY. A read returns a 0.
3	Pll Gain	This bit controls the gain of the frequency multiplying phase lock loops. When a 0 (default) the gain is set to a value expected for 5 volt operation. When set to a 1 the gain is doubled to a value for possible 3 volt operation.
4	Pll Stop	A 1 in this bit position stops the frequency multiplying phase lock loops. A 0 (default) allows normal operation.
5	ACE_STOP	This bit when set to a 1 will inhibit the 24MHz clock to the divide by 12/13 that generates the UART clocks, and reset those dividers. When at a 0 (default) these dividers and clocks are enabled.
6	PLL Clock Control	This bit enables the PLL clock generator to run with either a 14.318MHz or 24MHz input clock. A 0 enables the 14.318MHz clock (default), a 1 enables the 24MHz clock.
7	Infra Red Test	This bit enables the IR test mode. When this bit is set to a 1 the serial data seen by UART RX and TX ports is output on SOUT. A 0 gives normal operation (default).

CR11

This register can only be accessed in the Configuration Mode and after the CSR has been initialized to 11H. The default value of this register after power up is 00H.

Table 59 - CR11

BIT NO.	BIT NAME	DESCRIPTION
0	IR Loop Back	When a 1 the IROUT is looped back internally to the IRIN input. When a 0 (default) normal operation.
1	Test 10ms	This bit when a 1 tests the 10ms timeout of the FDC autopower down mode. A 0 (default) allows normal operation.
2 - 7	Reserved	Reserved - READ ONLY. A read returns a 0.

Downloaded from Arrow.com.

CR12-CR1D
These registers are reserved. The default value of these registers after power up is 00H.

CR1E
This register can only be accessed in the Configuration Mode and after the CSR has been initialized to 1EH. The default value of this register after power up is 80H. This register is used to select the base address of the Game Chip Select decoder (GAMECS). The GAMECS can be set to 48 locations, on 16 byte boundaries from 100H-3F0H. To disable the GAMECS, set DB1 and DB0 to zero.

DB7	DB6	DB5	DB4	DB3	DB2	DB1	DB0
ADR9	ADR8	ADR7	ADR6	ADR5	ADR4	GAMECS Config	

DB1	DB0	GAMECS Configuration
0	0	GAMECS disabled
0	1	1 Byte decode, ADR[3:0] = 0001b
1	0	8 Byte block decode, ADR[3:0] = 0XXXb
1	1	16 byte block decode, ADR[3:0] = XXXXb

Upper Address Decode requirements: nCS='0' and A10='0' are required to qualify the GAMECS output.

CR03, bit DB0 is the PWRGD/GAMECS control bit and overrides the selection made by the above configuration.

Downloaded from Arrow.com.

CR1F

This register can only be accessed in the Configuration Mode and after the CSR has been initialized to 1FH. The default value of this register after power up is 00H. This register indicates the Drive Type used for each drive. Refer to CR0B for Data Rate Table register.

FDD3		FDD2		FDD1		FDD0	
D7	D6	D5	D4	D3	D2	D1	D0
DT0	DT1	DT0	DT1	DT0	DT1	DT0	DT1

DTx = Drive Type select

DT0	DT1	DRVDEN0 (Note)	DRVDEN1 (Note)	Drive Type
0	0	DENSEL	DRATE0	4/2/1 MB 3.5" 2/1 MB 5.25" FDDS 2/1.6/1 MB 3.5" (3-MODE)
0	1	DRATE1	DRATE0	
1	0	nDENSEL	DRATE0	PS/2
1	1	DRATE0	DRATE1	

Note: DENSEL, DRATE1 and DRATE0 map onto two output pins DRVDEN0 and DRVDEN1.

CR20

This register can only be accessed in the Configuration Mode and after the CSR has been initialized to 20H. The default value of this register after power up is 3CH. This register is used to select the base address of the floppy disk controller (FDC). The FDC can be set to 48 locations, on 16 byte boundaries from 100H-3F0H. To disable the FDC, set ADR9 and ADR8 to zero.

Upper Address Decode requirements: nCS='0' and A10='0' are required to access the FDC registers. A[3:0] are decoded as 0XXXb.

DB7	DB6	DB5	DB4	DB3	DB2	DB1	DB0
ADR9	ADR8	ADR7	ADR6	ADR5	ADR4	0	0

Downloaded from Arrow.com.

CR21

This register can only be accessed in the Configuration Mode and after the CSR has been initialized to 21H. The default value of this register after power up is 3CH. This register is used to select the base address of the IDE Interface Control Registers (0-7). This can be set to 48 locations, on 16 byte boundaries from 100H-3F0H. To disable this decode, set ADR9 and ADR8 to zero.

Upper Address Decode requirements : nCS='0' and A10='0' are required to access the IDE registers. A[3:0] are decoded as 0XXXb.

DB7	DB6	DB5	DB4	DB3	DB2	DB1	DB0
ADR9	ADR8	ADR7	ADR6	ADR5	ADR4	0	0

CR22

This register can only be accessed in the Configuration Mode and after the CSR has been initialized to 22H. The default value of this register after power up is 3DH. This register is used to select the base address of the IDE Interface Alternate Status Register. This can be set to 48 locations, on 16 byte boundaries+6 from 106H-3F6H. To disable this decode, set ADR9 and ADR8 to zero.

Upper Address Decode requirements : nCS='0' and A10='0' are required to access the IDE Alternate Status register. A[3:0] must be 0110b.

DB7	DB6	DB5	DB4	DB3	DB2	DB1	DB0
ADR9	ADR8	ADR7	ADR6	ADR5	ADR4	0	1

CR23

This register can only be accessed in the Configuration Mode and after the CSR has been initialized to 23H. The default value of this register after power up is 00H. This register is used to select the base address of the parallel port. If EPP is not enabled, the parallel port can be set to 192 locations, on 4 byte boundaries from 100H-3FCH. If EPP is enabled, the parallel port can be set to 96 locations, on 8 byte boundaries from 100H-3F8H. To disable the parallel port, set ADR9 and ADR8 to zero.

Upper Address Decode requirements : nCS='0' and A10='0' are required to access the Parallel Port when in Compatible, Bi-directional, or EPP modes (A10 is active when in ECP mode).

DB7	DB6	DB5	DB4	DB3	DB2	DB1	DB0
ADR9	ADR8	ADR7	ADR6	ADR5	ADR4	ADR3	ADR2

EPP Enabled	Addressing (low bits) Decode
No	A[1:0] = XXb
Yes	A[2:0] = XXXb

Downloaded from Arrow.com.

CR24

This register can only be accessed in the Configuration Mode and after the CSR has been initialized to 25H. The default value of this register after power up is 00H. This register is used to select the base address of UART1 (serial port 1). The serial port can be set to 96 locations, on 8 byte boundaries from 100H-3F8H. To disable the serial port, set ADR9 and ADR8 to zero.

Upper Address Decode requirements : nCS='0' and A10='0' are required to access UART1 registers. A[2:0] are decoded as XXXb.

DB7	DB6	DB5	DB4	DB3	DB2	DB1	DB0
ADR9	ADR8	ADR7	ADR6	ADR5	ADR4	ADR3	0

CR25

This register can only be accessed in the Configuration Mode and after the CSR has been initialized to 25H. The default value of this register after power up is 00H. This register is used to select the base address of UART2 (serial port 2). The serial port can be set to 96 locations, on 8 byte boundaries from 100H-3F8H. To disable the serial port, set ADR9 and ADR8 to zero.

Upper Address Decode requirements : nCS='0' and A10='0' are required to access UART2 registers. A[2:0] are decoded as XXXb.

DB7	DB6	DB5	DB4	DB3	DB2	DB1	DB0
ADR9	ADR8	ADR7	ADR6	ADR5	ADR4	ADR3	0

CR26

This register can only be accessed in the Configuration Mode and after the CSR has been initialized to 26H. The default value of this register after power up is 00H. This register is used to select the DMA for the FDC (Bits 4:7) and the parallel port (bits 3:0). Any unselected DMA REQ output is in tristate.

D3-D0 D7-D4	DMA Selected
0000	None
0001	DMA_A
0010	DMA_B
0011	DMA_C

Downloaded from Arrow.com.

CR27

This register can only be accessed in the Configuration Mode and after the CSR has been initialized to 27H. The default value of this register after power up is 00H. This register is used to select the IRQ for the FDC (Bits 4:7) and the parallel port (bits 3:0). Any unselected IRQ output (registers CR27-CR29) is in tristate.

CR28

This register can only be accessed in the Configuration Mode and after the CSR has been initialized to 28H. The default value of this register after power up is 00H. This register is used to select the IRQ for serial port 1 (bits 7:4) and for serial port 2 (bits 3:0). Refer to IRQ Table for CR27. Any unselected IRQ output (registers CR27 - CR29) is in tristate.

To properly share an IRQ among UART1 and UART2:

1) Configure UART1 to use the desired IRQ pin.
2) Set UART2 to 0Fh i.e., set CR28 bits[3:0]=1111. This selects the share IRQ mechanism. Refer to Table 60 on the following page:

D3-D0 or D7-D4	IRQ Selected
0000	None
0001	IRQ_A
0010	IRQ_B
0011	IRQ_C
0100	IRQ_D
0101	IRQ_E
0110	IRQ_F
0111	Reserved
1000	IRQ_H

CR29

This register can only be accessed in the Configuration Mode and after the CSR has been initialized to 29H. The default value of this register after power up is 00H. This register is used to select the IRQ for IRQIN (bits 3:0). Refer to IRQ Table for CR27. Bits 7:4 are reserved and return zero when read. Any unselected IRQ output (registers CR27-CR29) is in tristate.

Downloaded from Arrow.com.

Table 60 - UART Interrupt Operation Table

UART1		UART2			IRQ PINS	
UART1 OUT2 bit	**UART1 IRQ Output State**	**UART2 OUT2 bit**	**UART2 IRQ Output State**	**Share IRQ**	**UART1 Pin State**	**UART2 Pin State**
0	Z	0	Z	No	Z	Z
1	asserted	0	Z	No	1	Z
1	de-asserted	0	Z	No	0	Z
0	Z	1	asserted	No	Z	1
0	Z	1	de-asserted	No	Z	0
1	asserted	1	asserted	No	1	1
1	asserted	1	de-asserted	No	1	0
1	de-asserted	1	asserted	No	0	1
1	de-asserted	1	de-asserted	No	0	0
0	Z	0	Z	Yes	Z	Z
1	asserted	0	Z	Yes	1	Z
1	de-asserted	0	Z	Yes	0	Z
0	Z	1	asserted	Yes	1	Z
0	Z	1	de-asserted	Yes	0	Z
1	asserted	1	asserted	Yes	1	Z
1	asserted	1	de-asserted	Yes	1	Z
1	de-asserted	1	asserted	Yes	1	Z
1	de-asserted	1	de-asserted	Yes	0	Z

It is the responsibility of the software to ensure that two IRQ's are not set to the same IRQ number. Potential damage to chip may result.

Downloaded from Arrow.com.

OPERATIONAL DESCRIPTION

MAXIMUM GUARANTEED RATINGS*

Operating Temperature Range ..... 0^oC to $+70^oC$
Storage Temperature Range ..... -55° to $+150^oC$
Lead Temperature Range (soldering, 10 seconds) ..... $+325^oC$
Positive Voltage on any pin, with respect to Ground ..... V_{CC}+0.3V
Negative Voltage on any pin, with respect to Ground..... -0.3V
Maximum V_{CC}..... *+7V*

*Stresses above those listed above could cause permanent damage to the device. This is a stress rating only and functional operation of the device at any other condition above those indicated in the operation sections of this specification is not implied.

Note: When powering this device from laboratory or system power supplies, it is important that the Absolute Maximum Ratings not be exceeded or device failure can result. Some power supplies exhibit voltage spikes on their outputs when the AC power is switched on or off. In addition, voltage transients on the AC power line may appear on the DC output. If this possibility exists, it is suggested that a clamp circuit be used.

DC ELECTRICAL CHARACTERISTICS (T_A = 0°C - 70°C, V_{cc} = 5 V ± 10%)

PARAMETER	SYMBOL	MIN	TYP	MAX	UNITS	COMMENTS
I Type Input Buffer						
Low Input Level	V_{ILI}			0.8	V	TTL Levels
High Input Level	V_{IHI}	2.0			V	
IS Type Input Buffer						
Low Input Level	V_{ILIS}			0.8	V	Schmitt Trigger
High Input Level	V_{IHIS}	2.2			V	Schmitt Trigger
Schmitt Trigger Hysteresis	V_{HYS}		250		mV	
I_{CLK} Input Buffer						
Low Input Level	V_{ILCK}			0.4	V	
High Input Level	V_{IHCK}	*3.0*			V	

Downloaded from Arrow.com.

PARAMETER	SYMBOL	MIN	TYP	MAX	UNITS	COMMENTS
Input Leakage (All I and IS buffers except PWRGD)						
Low Input Leakage	I_{IL}	-10		+10	µA	V_{IN} = 0
High Input Leakage	I_{IH}	-10		+10	µA	V_{IN} = V_{CC}
Input Current PWRGD	I_{OH}		75	150	µA	V_{IN} = 0
I/O*24* Type Buffer						
Low Output Level	V_{OL}			0.5	V	I_{OL} = *24 mA*
High Output Level	V_{OH}	2.4			V	I_{OH} = *-12 mA*
Output Leakage	I_{OL}	-10		+10	µA	V_{IN} = 0 to V_{CC} (Note 1)
O*24* Type Buffer						
Low Output Level	V_{OL}			0.5	V	I_{OL} = *24 mA*
High Output Level	V_{OH}	2.4			V	I_{OH} = *-12 mA*
Output Leakage	I_{OL}	-10		+10	µA	V_{IN} = 0 to V_{CC} (Note 1)
OD*48* Type Buffer						
Low Output Level	V_{OL}			0.5	V	I_{OL} =*48 mA*
Output Leakage	I_{OH}	-10		+10	µA	V_{OH} = 0 to V_{CC} (Note 2)
O*24P* Type Buffer						
Low Output Level	V_{OL}			0.4	V	I_{OL} =*24mA*
High Output Level	V_{OH}	2.4			V	I_{OH} = *-12 mA*
Output Leakage	I_{OL}	-10		+10	µA	V_{IN} = 0 to V_{CC} (Note 1)
04 Type Buffer						
Low Output Level	V_{OL}			*0.4*	*V*	I_{OL} =*4mA*
High Output Level	V_{OH}	*2.4*			*V*	I_{OH} = *-2 mA*
Output Leakage	I_{OL}	*-1.0*		*+10*	µA	V_{IN} = 0 to V_{CC} *(Note 1)*

Downloaded from Arrow.com.

PARAMETER	SYMBOL	MIN	TYP	MAX	UNITS	COMMENTS
OD*24* Type Buffer						
Low Output Level	V_{OL}			0.5	V	I_{OL} = *24 mA*
Output Leakage	I_{OL}	-10		+10	µA	V_{IN} = 0 to V_{CC} (Note 1)
OD*24*P Type Buffer						
Low Output Level	V_{OL}			0.5	V	I_{OL} = *24mA*
High Output Level	V_{OH}	2.4			V	I_{OH} =*-30µA*
Output Leakage	I_{OL}	-10		+10	µA	V_{IN} = 0 to V_{CC} (Note 1)
OP*24* Type Buffer						
Low Output Level	V_{OL}			*0.5*	V	I_{OL} = *24 mA*
High Output level	V_{OH}	2.4			V	I_{OH} =*-4mA*
Output Leakage	I_{OL}	-10		+10	µA	V_{IN} = 0 to V_{CC} (Note 1)
Supply Current Active	I_{CC}		*25*	*35*	mA	All outputs open.
Supply Current Standby	I_{CSBY}			*100*	µA	Note 3, 4
ChiProtect (SLCT, PE, BUSY, nACK, nERROR)	I_{IL}			±10	µA	Chip in circuit: V_{CC} = 0V V_{IN} = 6V Max.

Note 1: All output leakages are measured with the current pins in high impedance as defined by the PWRGD pin.
Note 2: Output leakage is measured with the low driving output off, either for a high level output or a high impedance state defined by PWRGD.
Note 3: Defined by the device configuration with the PWRGD input low *and 14 MHz clock inactive*.
Note 4: Max standby supply current given is for Rev. H and K parts. Contact SMSC for Rev. J and all other Revs.

CAPACITANCE T_A = 25°C; fc = 1MHz; V_{CC} = *5V*

PARAMETER	SYMBOL	LIMITS			UNIT	TEST CONDITION
		MIN	TYP	MAX		
Clock Input Capacitance	C_{IN}			20	pF	All pins except pin under test tied to AC ground
Input Capacitance	C_{IN}			10	pF	
Output Capacitance	C_{OUT}			20	pF	

Downloaded from Arrow.com.

TIMING DIAGRAMS

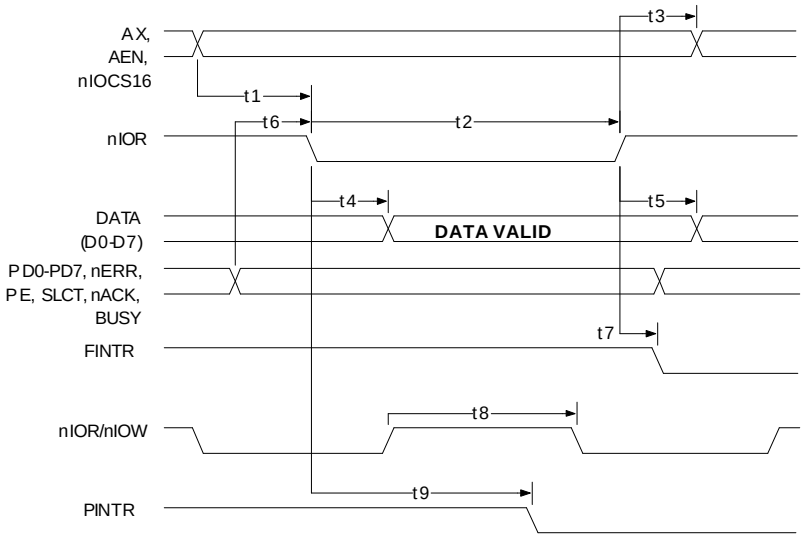

NOTE: PINTR is the interrupt assigned to the Parallel Port
FINTR is the interrupt assigned to the Floppy Disk

	Parameter	min	typ	max	units
t1	A0-A9, AEN, nIOCS16 Set Up to nIOR Low	40			ns
t2	nIOR Width	150			ns
t3	A0-A9, AEN, nIOCS16 Hold from nIOR High	10			ns
t4	Data Access Time from nIOR Low			100	ns
t5	Data to Float Delay from nIOR High	10		60	ns
t6	Parallel Port Setup		20		ns
t7	Read Strobe to Clear FINTR		40	55	ns
t8	nIOR or nIOW Inactive for Transfers to and from ECP FIFO	150			ns
t9	nIOR Active to PINTR Inactive			260	ns

FIGURE 3 - MICROPROCESSOR READ TIMING

Downloaded from Arrow.com.

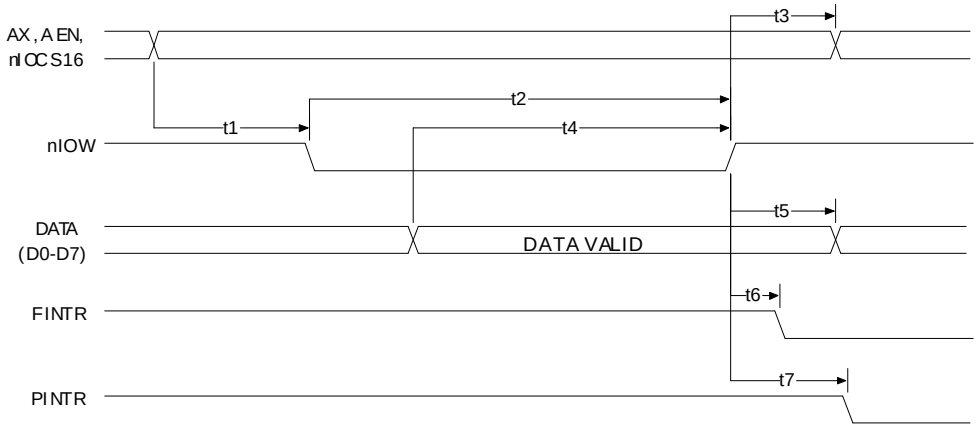

NOTE: PINTR is the interrupt assigned to the Parallel Port
FINTR is the interrupt assigned to the Floppy Disk

	Parameter	min	typ	max	units
t1	A0-A9, AEN, nIOCS16 Set Up to nIOW Low	40			ns
t2	nIOW Width	150			ns
t3	A0-A9, AEN, nIOCS16 Hold from nIOW High	10			ns
t4	Data Set Up Time to nIOW High	40			ns
t5	Data Hold Time from nIOW High	10			ns
t6	Write Strobe to Clear FINTR		40	55	ns
t7	nIOW Inactive to PINTR Inactive			260	ns

FIGURE 4 - MICROPROCESSOR WRITE TIMING

Downloaded from Arrow.com.

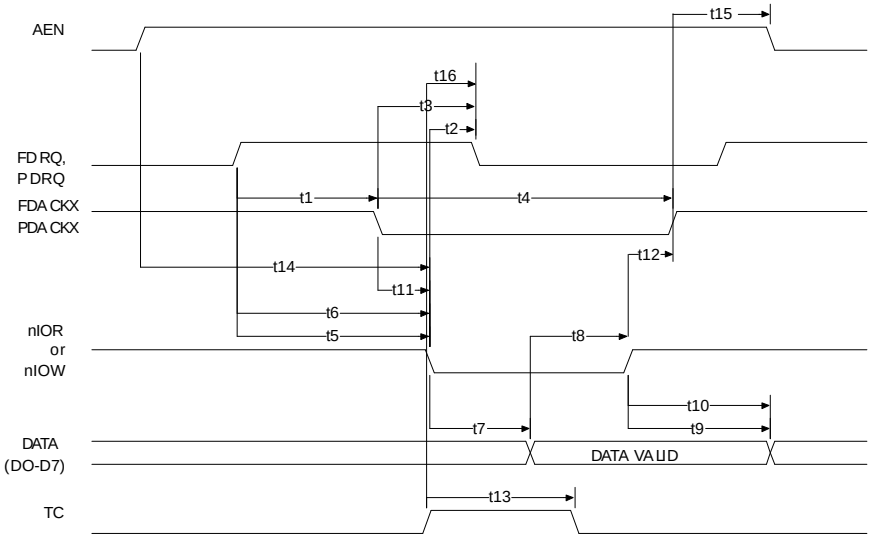

NOTE: FDRQ refers to the DRQ assigned to the Floppy Disk
PDRQ refers to the DRQ assigned to the Parallel Port
FDACKX refers to the DRQ assigned to the to the Floppy Disk
PDACKX refers to the DRQ assigned to the Parallel Port

	Parameter	min	typ	max	units
t1	nDACK Delay Time from FDRQ High	0		100	ns
t2	DRQ Reset Delay from nIOR or nIOW			100	ns
t3	FDRQ Reset Delay from nDACK Low				ns
t4	nDACK Width	150			ns
t5	nIOR Delay from FDRQ High	0			ns
t6	nIOW Delay from FDRQ High	0		100	ns
t7	Data Access Time from nIOR Low				ns
t8	Data Set Up Time to nIOW High	40		60	ns
t9	Data to Float Delay from nIOR High	10			ns
t10	Data Hold Time from nIOW High	10			ns
t11	nDACK Set Up to nIOW/nIOR Low	5			ns
t12	nDACK Hold After nIOW/nIOR High	10			ns
t13	TC Pulse Width	60			ns
t14	AEN Set Up to nIOR/nIOW	40			ns
t15	AEN Hold from nDACK	10		100	ns
t16	TC Active to PDRQ Inactive				ns

FIGURE 5 - DMA TIMING

Downloaded from Arrow.com.

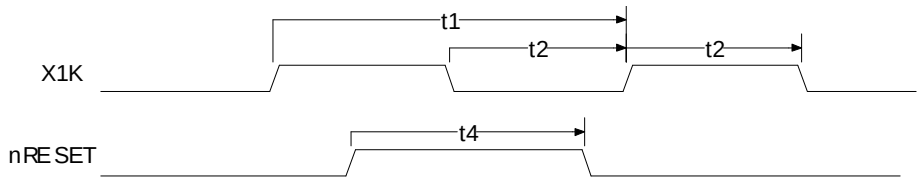

Name	Description	min	typ	max	Units
t1	Clock Cycle Time for 14.318MHZ			65	ns
t2	Clock High Time/Low Time for 14.318MHZ	25 nsec			ns
t1	Clock Cycle Time for 32KHZ				ns
t2	Clock High Time/Low Time for 32KHz				ns
	Clock Rise Time/Fall Time (not shown)			5	ns
t6	nRESET Low Time	1.5us			ns

NOTE 1:
The nRESET low time is dependent upon the processor clock. The nRESET must be active for a minimum of 24 x16MHz clock cycles.

FIGURE 6 - CLOCK TIMING

Downloaded from Arrow.com.

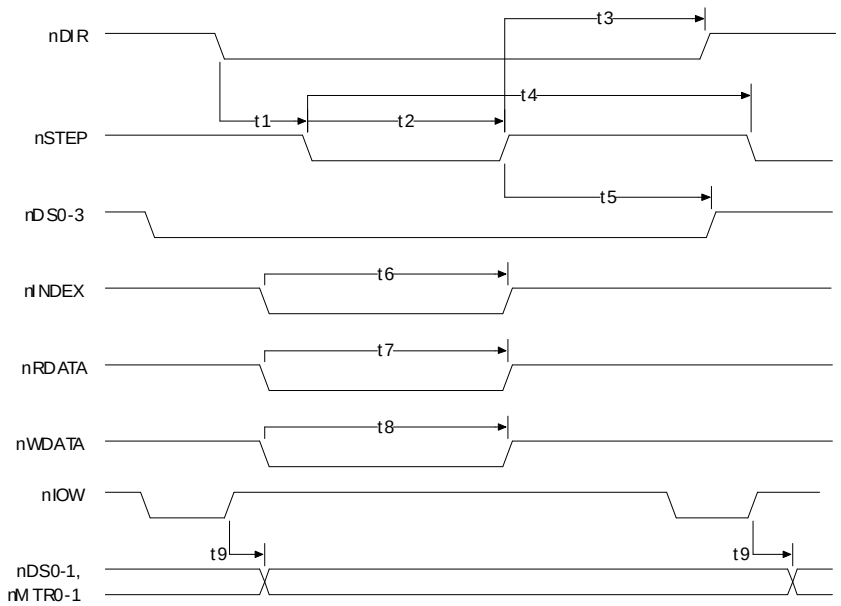

(AT Mode timing only)

	Parameter	min	typ	max	units
t1	nDIR Set Up to nSTEP Low		4		X*
t2	nSTEP Active Time Low		24		X*
t3	nDIR Hold Time After nSTEP		96		X*
t4	nSTEP Cycle Time		132		X*
t5	nDS0-1 Hold Time from nSTEP Low		20		X*
t6	nINDEX Pulse Width		2		X*
t7	nRDATA Active Time Low		40		ns
t8	nWDATA Write Data Width Low		.5		Y*
t9	nDS0-1, MTR0-1 from End of nIOW		25		ns

*X specifies one MCLK period and Y specifies one WCLK period.
MCLK = Controller Clock to FDC (See Table 6).
WCLK = 2 x Data Rate (See Table 6).

FIGURE 7 - DISK DRIVE TIMING

Downloaded from Arrow.com.

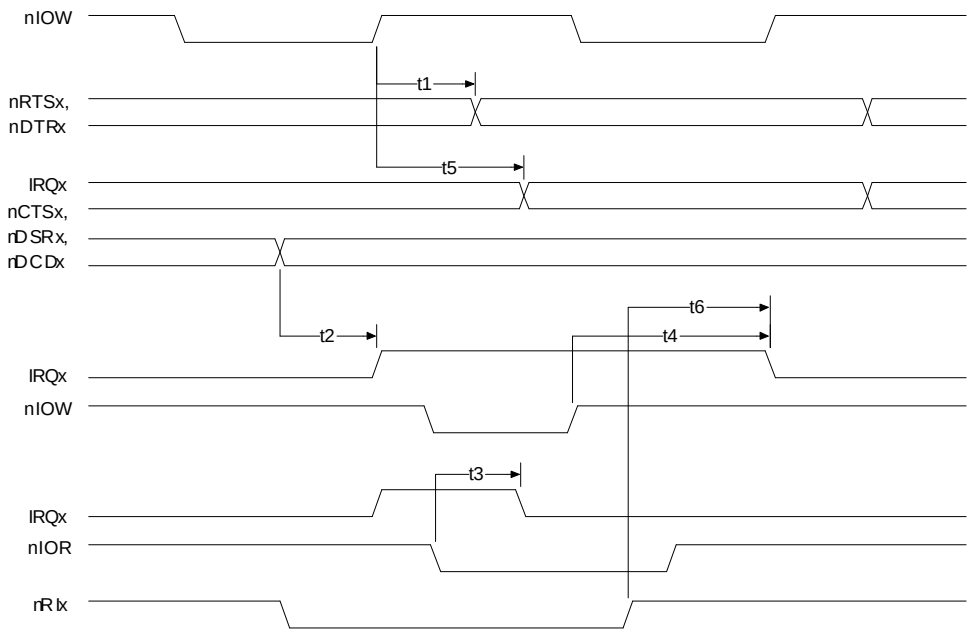

	Parameter	min	typ	max	units
t1	nRTSx, nDTRx Delay from nIOW			200	ns
t2	IRQx Active Delay from nCTSx, nDSRx, nDCDx			100	ns
t3	IRQx Inactive Delay from nIOR (Leading Edge)			120	ns
t4	IRQx Inactive Delay from nIOW (Trailing Edge)			125	ns
t5	IRQx Inactive Delay from nIOW	10		100	ns
t6	IRQx Active Delay from nRIx			100	ns

FIGURE 8 - SERIAL PORT TIMING

Downloaded from Arrow.com.

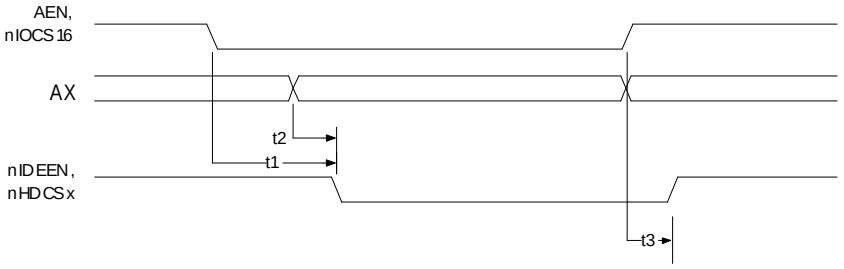

	Parameter	min	typ	max	units
t1	nIDEENLO, nIDEENHI, nHDCSx Delay from AEN, nIOCS16			40	ns
t2	nIDEENLO, nIDEENHI, nHDCSx Delay from AX				ns
t3	nIDEENLO Delay from nIDEENHI, nIOCS16, AEN			40	ns

FIGURE 9 - IDE INTERFACE TIMING

Downloaded from Arrow.com.

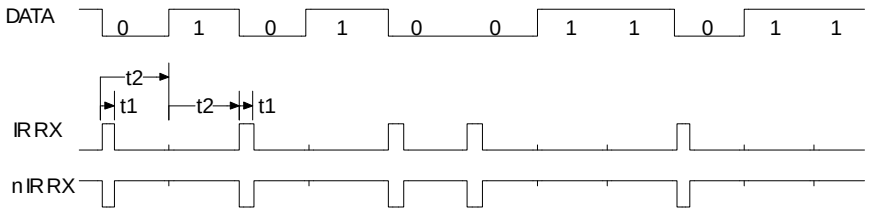

	Parameter	min	typ	max	units
t1	Pulse Width at 115kbaud	1.4	1.6	2.71	µs
t1	Pulse Width at 57.6kbaud	1.4	3.22	3.69	µs
t1	Pulse Width at 38.4kbaud	1.4	4.8	5.53	µs
t1	Pulse Width at 19.2kbaud	1.4	9.7	11.07	µs
t1	Pulse Width at 9.6kbaud	1.4	19.5	22.13	µs
t1	Pulse Width at 4.8kbaud	1.4	39	44.27	µs
t1	Pulse Width at 2.4kbaud	1.4	78	88.55	µs
t2	Bit Time at 115kbaud		8.68		µs
t2	Bit Time at 57.6kbaud		17.4		µs
t2	Bit Time at 38.4kbaud		26		µs
t2	Bit Time at 19.2kbaud		52		µs
t2	Bit Time at 9.6kbaud		104		µs
t2	Bit Time at 4.8kbaud		208		µs
t2	Bit Time at 2.4kbaud		416		µs

Notes:

1. Receive Pulse Detection Criteria: A received pulse is considered detected if the received pulse is a minimum of 1.41µs.
2. IRTX: CRC Bit 0: 1 = RCV active low
   nIRTX: CRC Bit 0: 0 = RCV active high

FIGURE 10 - IrDA RECEIVE TIMING

Downloaded from Arrow.com.

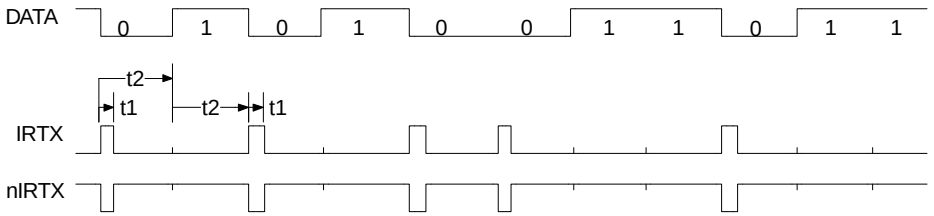

	Parameter	min	typ	max	units
t1	Pulse Width at 115kbaud	1.41	1.6	2.71	µs
t1	Pulse Width at 57.6kbaud	1.41	3.22	3.69	µs
t1	Pulse Width at 38.4kbaud	1.41	4.8	5.53	µs
t1	Pulse Width at 19.2kbaud	1.41	9.7	11.07	µs
t1	Pulse Width at 9.6kbaud	1.41	19.5	22.13	µs
t1	Pulse Width at 4.8kbaud	1.41	39	44.27	µs
t1	Pulse Width at 2.4kbaud	1.41	78	88.55	µs
t2	Bit Time at 115kbaud		8.68		µs
t2	Bit Time at 57.6kbaud		17.4		µs
t2	Bit Time at 38.4kbaud		26		µs
t2	Bit Time at 19.2kbaud		52		µs
t2	Bit Time at 9.6kbaud		104		µs
t2	Bit Time at 4.8kbaud		208		µs
t2	Bit Time at 2.4kbaud		416		µs

Notes:

1. IrDA @ 115k is HPSIR compatible. IrDA @ 2400 will allow compatibility with HP95LX and 48SX.
2. IRTX: CRC Bit 1: 1 = XMIT active low
   nIRTX: CRC Bit 1: 0 = XMIT active high

FIGURE 11 - IrDA TRANSMIT TIMING

Downloaded from Arrow.com.

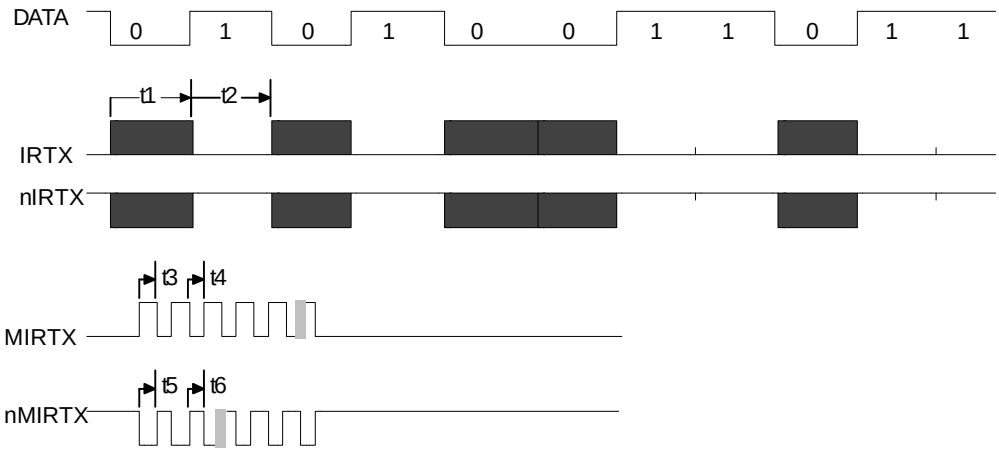

	Parameter	min	typ	max	units
t1	Modulated Output Bit Time				µs
t2	Off Bit Time				µs
t3	Modulated Output "On"	0.8	1	1.2	µs
t4	Modulated Output "Off"	0.8	1	1.2	µs
t5	Modulated Output "On"	0.8	1	1.2	µs
t6	Modulated Output "Off"	0.8	1	1.2	µs

Notes:

1. IRTX: CRC Bit 1: 1 = XMIT active low
   nIRTX: CRC Bit 1: 0 = XMIT active high
   MIRTX, nMIRTX are the modulated outputs

FIGURE 12 - AMPLITUDE SHIFT KEYED IR TRANSMIT TIMING

Downloaded from Arrow.com.

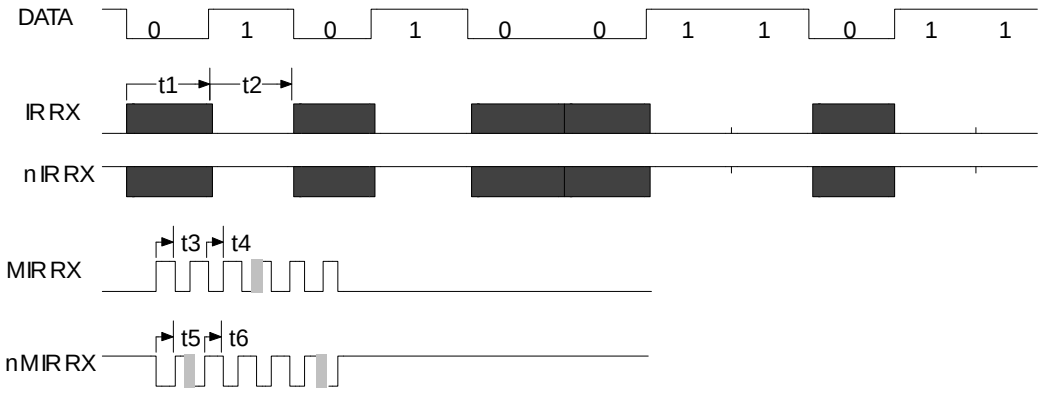

	Parameter	min	typ	max	units
t1	Modulated Output Bit Time				µs
t2	Off Bit Time				µs
t3	Modulated Output "On"	0.8	1	1.2	µs
t4	Modulated Output "Off"	0.8	1	1.2	µs
t5	Modulated Output "On"	0.8	1	1.2	µs
t6	Modulated Output "Off"	0.8	1	1.2	µs

Notes:

1. IRRX: CRC Bit 0: 1 = RCV active low
   nIRRX: CRC Bit 0: 0 = RCV active high
   MIRRX, nMIRRX are the modulated outputs

FIGURE 13 - AMPLITUDE SHIFT KEYED IR RECEIVE TIMING

Downloaded from Arrow.com.

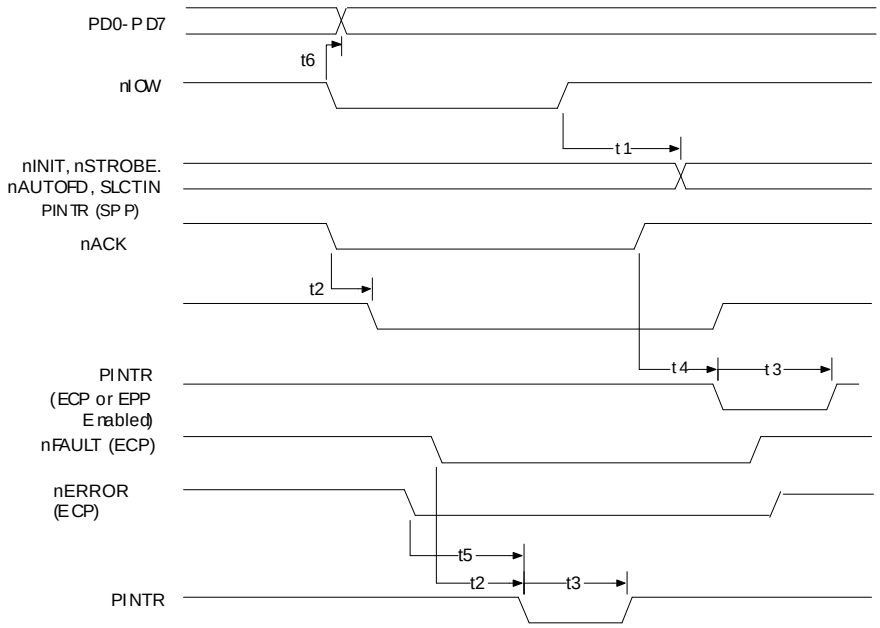

	Parameter	min	typ	max	units
t1	nINIT, nSTROBE, nAUTOFD Delay from nIOW Inactive			100	ns
t2	PINTR Delay from nACK, nFAULT			60	ns
t3	PINTR Active Low in ECP and EPP Modes	200		300	ns
t4	PINTR Delay from nACK			105	ns
t5	nERROR Active to PINTR Active			105	ns
t6	PD0-PD7 Delay from nIOW Active			100	ns

NOTE: PINTR is the interrupt assigned to the Parallel Port

FIGURE 14 - PARALLEL PORT TIMING

Downloaded from Arrow.com.

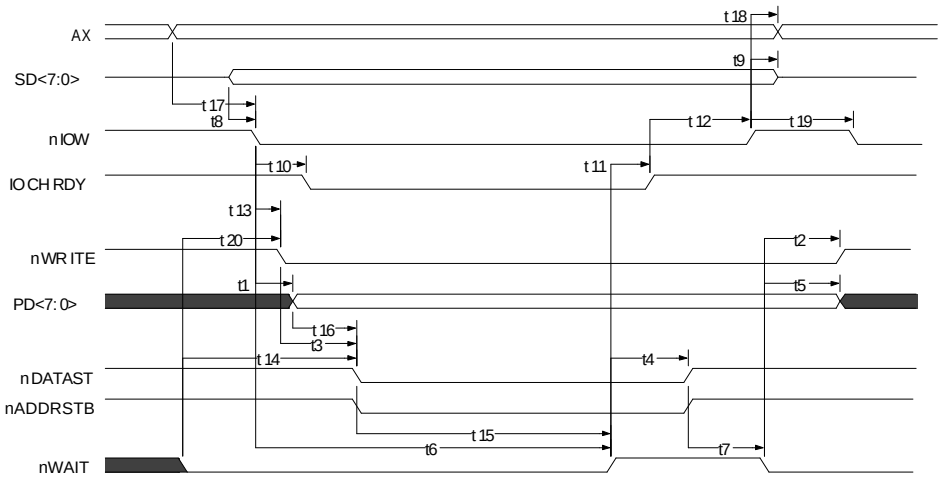

	Parameter	min	max	units	Notes
t1	nIOW Asserted to PDATA Valid	0	50	ns	
t2	nWAIT Asserted to nWRITE Change	60	185	ns	1
t3	nWRITE to Command Asserted	5	35	ns	
t4	nWAIT Deasserted to Command Deasserted	60	190	ns	1
t5	nWAIT Asserted to PDATA Invalid	0		ns	1
t6	Time Out	10	12	µs	
t7	Command Deasserted to nWAIT Asserted	0		ns	
t8	SDATA Valid to IOW Asserted	10		ns	
t9	nIOW Deasserted to DATA Invalid	0		ns	
t10	nIOW Asserted to IOCHRDY Asserted	0	24	ns	
t11	WAIT Deasserted to nIOCHRDY Deasserted	60	160	ns	1
t12	IOCHRDY Deasserted to nIOW Deasserted	10		ns	
t13	nIOW Asserted to nWRITE Asserted	0	70	ns	
t14	nWAIT Asserted to Command Asserted	60	210	ns	1
t15	Command Asserted to nWAIT Deasserted	0	10	µs	
t16	PDATA Valid to Command Asserted	10		ns	
t17	Ax Valid to nIOW Asserted	40		ns	
t18	nIOW Deasserted to Ax Invalid	10		ns	
t19	nIOW Deasserted to nIOW or nIOR Asserted	40		ns	
t20	nWAIT Asserted to nWRITE Asserted	60	185	ns	1

1. WAIT must be filtered to compensate for ringing on the parallel bus cable. WAIT is considered to have settled after it does not transition for a minimum of 50 nsec.

FIGURE 15 - EPP 1.9 DATA OR ADDRESS WRITE CYCLE

Downloaded from Arrow.com.

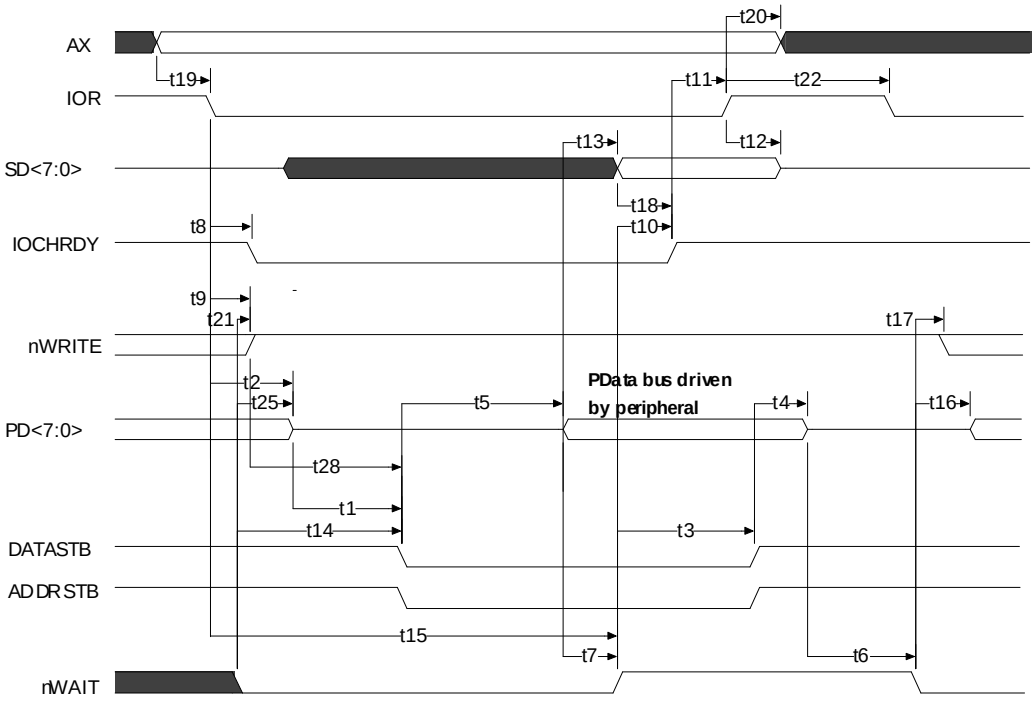

Timing parameter table for the EPP Data or Address Read Cycle is found on next page.

FIGURE 16A - EPP 1.9 DATA OR ADDRESS READ CYCLE

Downloaded from Arrow.com.

	Parameter	min	max	units	Notes
t1	PDATA Hi-Z to Command Asserted	0	30	ns	
t2	nIOR Asserted to PDATA Hi-Z	0	50	ns	
t3	nWAIT Deasserted to Command Deasserted	60	180	ns	1
t4	Command Deasserted to PDATA Hi-Z	0		ns	
t5	Command Asserted to PDATA Valid	0		ns	
t6	PDATA Hi-Z to nWAIT Deasserted	0		µs	
t7	PDATA Valid to nWAIT Deasserted	0		ns	
t8	nIOR Assertd to IOCHRDY Asserted	0	24	ns	
t9	nWRITE Deasserted to nIOR Asserted	0		ns	2
t10	nWAIT Deasserted to IOCHRDY Deasserted	60	160	ns	1
t11	IOCHRDY Deasserted to nIOR Deasserted	0		ns	
t12	nIOR Deasserted to SDATA Hi-Z (Hold Time)	0	40	ns	
t13	PDATA Valid to SDATA Valid	0	75	ns	
t14	nWAIT Asserted to Command Asserted	0	195	ns	
t15	Time Out	10	12	µs	
t16	nWAIT Deasserted to PDATA Driven	60	190	ns	1
t17	nWAIT Deasserted to nWRITE Modified	60	190	ns	1,2
t18	SDATA Valid to IOCHRDY Deasserted	0	85	ns	3
t19	Ax Valid to nIOR Asserted	40		ns	
t20	nIOR Deasserted to Ax Invalid	10	10	ns	
t21	nWAIT Asserted to nWRITE Deasserted	0	185	ns	
t22	nIOR Deasserted to nIOW or nIOR Asserted	40		ns	
t25		60	180	ns	1
t28	nWAIT Asserted to PDATA Hi-Z WRITE Deasserted to Command	1		ns	

1. n WAIT is considered to have settled after it does not transition for a minimum of 50 ns.
2. When not executing a write cycle, EPP nWRITE is inactive high.
3. 85 is true only if t7 = 0.

FIGURE 16B - EPP 1.9 DATA OR ADDRESS READ CYCLE TIMING PARAMETERS

Downloaded from Arrow.com.

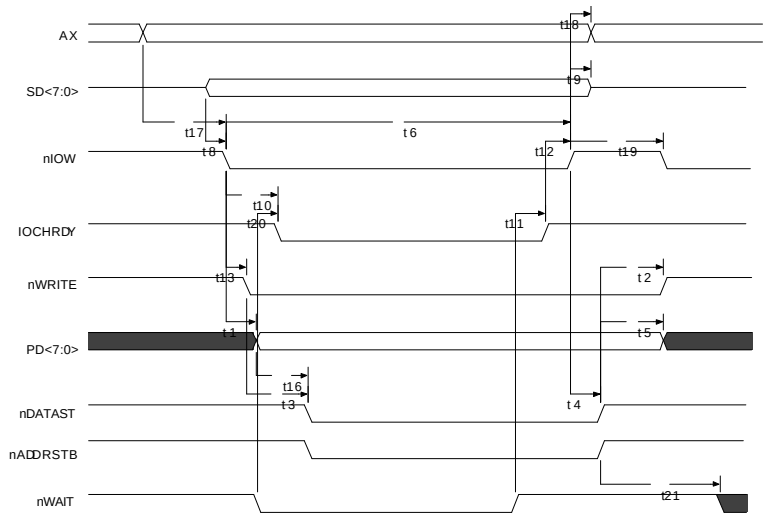

	Parameter	min	max	units	Notes
t1	nIOW Asserted to PDATA Valid	0	50	ns	
t2	Command Dessserted to nWRITE Change	0	40	ns	
t3	nWRITE to Command	5	35	ns	
t4	nIOW Deasserted to Command Deasserted		50	ns	2
t5	Command Deasserted to PDATA Invalid	50		ns	
t6	Time Out	10	12	µs	
t8	SDATA Valid to nIOW Asserted	10		ns	
t9	nIOW Deasserted to DATA Invalid	0		ns	
t10	nIOW Asserted to IOCHRDY Asserted	0	24	ns	
t11	nWAIT Deasserted to IOCHRDY Deasserted		40	ns	
t12	IOCHRDY Deasserted to nIOW Deasserted	10		ns	
t13	nIOW Asserted to nWRITE Asserted	0	50	ns	
t16	PDATA Valid to Command Asserted	10	35	ns	
t17	Ax Valid to nIOW Asserted	40		ns	
t18	nIOW Deasserted to Ax Invalid	10		µs	
t19	nIOW Deasserted to nIOW or nIOR Asserted	100		ns	
t20	nWAIT Asserted to IOCHRDY Deasserted		45	ns	
t21	Command Deasserted to nWAIT Deasserted	0		ns	

1. WRITE is controlled by clearing the PDIR bit to "0" in the control register before performing an EPP Write.
2. This number is only valid if WAIT is active when nIOW goes active.

FIGURE 17 - EPP 1.7 DATA OR ADDRESS WRITE CYCLE

Downloaded from Arrow.com.

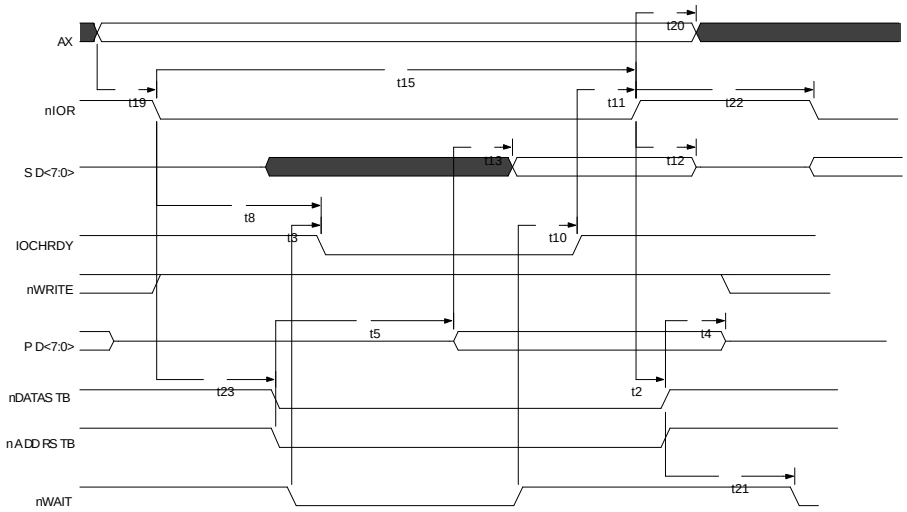

	Parameter	min	max	units	Notes
t2	nIOR Deasserted to Command Deasserted		50	ns	
t3	nWAIT Asserted to IOCHRDY Deasserted	0	40	ns	
t4	Command Deasserted to PDATA Hi-Z	0		ns	
t5	Command Asserted to PDATA Valid	0		ns	
t8	nIOR Asserted to IOCHRDY Asserted		24	ns	
t10	nWAIT Deasserted to nIOCHRDY Deasserted		50	ns	
t11	nIOCHRDY Deasserted to nIOR Deasserted	0		ns	
t12	nIOR Deasserted to SDATA High-Z (Hold Time)	0	40	ns	
t13	PData Valid to SDATA Valid		40	ns	
t15	Time Out	10	12	µs	
t19	Ax Valid to nIOR Asserted	40		ns	
t20	nIOR Deasserted to Ax Invalid	10		ns	
t21	Command Deasserted to nWAIT Deasserted	0		ns	
t22	nIOR Deasserted to nIOW or nIOR Asserted	40		ns	
t23	nIOR Asserted to Command Asserted		55	ns	

1. nWRITE is controlled by setting the PDIR bit to "1" in the control register before performing an EPP Read.

FIGURE 18 - EPP 1.7 DATA OR ADDRESS READ CYCLE

Downloaded from Arrow.com.

ECP PARALLEL PORT TIMING

Parallel Port FIFO (Mode 101)

The standard parallel port is run at or near the peak 500 Kbps allowed in the forward direction using DMA. The state machine does not examine nAck and begins the next transfer based on Busy. Refer to Figure 19.

ECP Parallel Port Timing

The timing is designed to allow operation at approximately 2.0Mbytes/sec over a 15ft cable. If a shorter cable is used then the bandwidth will increase.

Forward-Idle

When the host has no data to send it keeps HostClk (nStrobe) high and the peripheral will leave PeriphClk (Busy) low.

Forward Data Transfer Phase

The interface transfers data and commands from the host to the peripheral using an interlocked PeriphAck and HostClk. The peripheral may indicate its desire to send data to the host by asserting nPeriph Request.

The Forward Data Transfer Phase may be entered from the Forward-Idle Phase. While in the Forward Phase the peripheral may asynchronously assert the nPeriph Request (nFault) to request that the channel be reversed. When the peripheral is not busy it sets PeriphAck (Busy) low. The host then sets HostClk (nStrobe) low when it is prepared to send data. The data must be stable for the specified setup time prior to the falling edge of HostClk. The peripheral then sets PeriphAck (Busy) high to acknowledge the handshake. The host then sets HostClk (nStrobe) high. The peripheral then accepts the data and sets PeriphAck (Busy) low, completing the transfer. This sequence is shown in Figure 20.

The timing is designed to provide 3 cable round-trip times for data setup if Data is driven simultaneously with HostClk (nStrobe).

Reverse-Idle Phase

The peripheral has no data to send and keeps PeriphClk high. The host is idle and keeps HostAck low.

Reverse Data Transfer Phase

The interface transfers data and commands from the peripheral to the host using an interlocked HostAck and PeriphClk.

The Reverse Data Transfer Phase may be entered from the Reverse-Idle Phase. After the previous byte has beed accepted the host sets HostAck (nAutoFd) low. The peripheral then sets PeriphClk (nAck) low when it has data to send. The data must be stable for the specified setup time prior to the falling edge of PeriphClk. When the host is ready it to accept a byte it sets. HostAck (nAutoFd) high to acknowledge the handshake. The peripheral then sets PeriphClk (nAck) high. After the host has accepted the data it sets HostAck (nAutoFd) low, completing the transfer. This sequence is shown in Figure 21.

OutputDrivers

To facilitate higher performance data transfer, the use of balanced CMOS active drivers for critical signals (Data, HostAck, HostClk, PeriphAck, PeriphClk) are used ECP Mode. Because the use of active drivers can present

Downloaded from Arrow.com.

compatibility problems in Compatible Mode (the control signals, by tradition, are specified as open-collector), the drivers are dynamically changed from open-collector to totem-pole. The timing for the dynamic driver change is specified in the IEEE 1284 Extended Capabilities Port Protocol and ISA Interface Standard, Rev. 1.09, Jan. 7, 1993, available from Microsoft. The dynamic driver change must be implemented properly to prevent glitching the outputs.

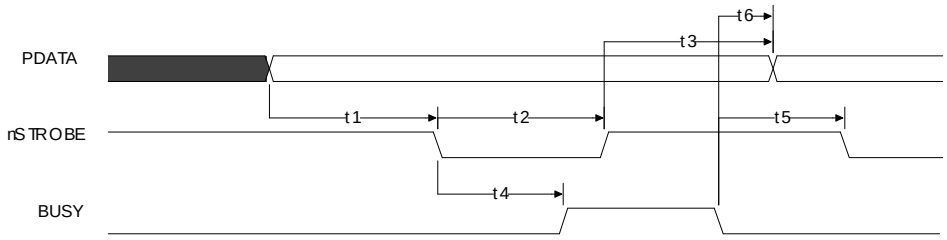

	Parameter	min	max	units	Notes
t1	DATA Valid to nSTROBE Active	600		ns	
t2	nSTROBE Active Pulse Width	600		ns	
t3	DATA Hold from nSTROBE Inactive	450		ns	1
t4	nSTROBE Active to BUSY Active		500	ns	
t5	BUSY Inactive to nSTROBE Active	680		ns	
t6	BUSY Inactive to PDATE Invalid	80		ns	1

1. The data is held until BUSY goes inactive or for time t3, whichever is longer. This only applies if another data transfer is pending. If no other data transfer is pending, the data is held indefinitely.

FIGURE 19 - PARALLEL PORT FIFO TIMING

Downloaded from Arrow.com.

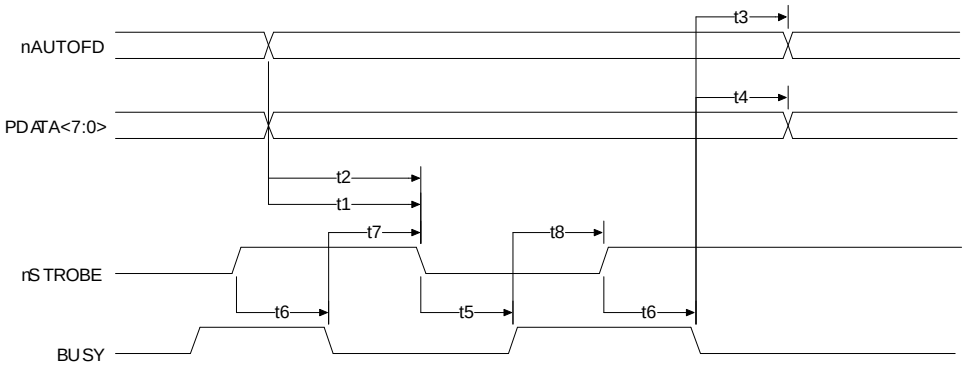

	Parameter	min	max	units	Notes
t1	nAUTOFD Valid to nSTROBE Asserted	0	60	ns	
t2	PDATA Valid to nSTROBE Asserted	0	60	ns	
t3	BUSY Deasserted to nAUTOFD Changed	80	180	ns	1,2
t4	nBUSY Deasserted to PDATA Changed	80	180	ns	1,2
t5	nSTROBE Asserted to BUSY Asserted	0		ns	
t6	nSTROBE Deasserted to Busy Deasserted	0		ns	
t7	nBUSY Deasserted to nSTROBE Asserted	80	200	ns	1,2
t8	nBUSY Asserted to nSTROBE Deasserted	80	180	ns	2

1. Maximum value only applies if there is data in the FIFO waiting to be written out.
2. BUSY is not considered asserted or deasserted until it is stable for a minimum of 75 to 130 ns.

FIGURE 20 - ECP PARALLEL PORT FORWARD TIMING

Downloaded from Arrow.com.

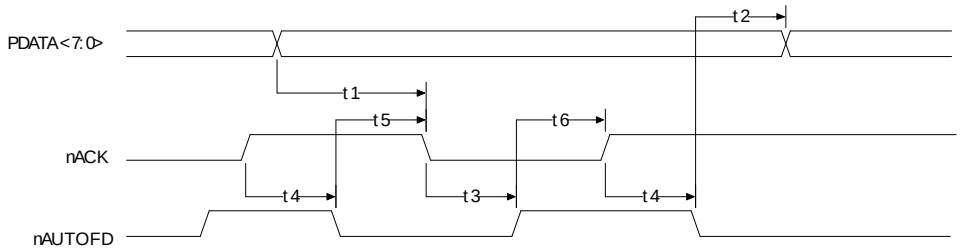

	Parameter	min	max	units	Notes
t1	PDATA Valid to nACK Asserted	0		ns	
t2	nAUTOFD Deasserted to PDATA Changed	0		ns	
t3	nACK Asserted to nAUTOFD Deasserted	80	200	ns	1,2
t4	nACK Deasserted to nAUTOFD Asserted	80	200	ns	2
t5	nAUTOFD Asserted to nACK Asserted	0		ns	
t6	nAUTOFD Deasserted to nACK Deasserted	0		ns	

1. Maximum value only applies if there is room in the FIFO and a terminal count has not been received. ECP can stall by keeping nAUTOFD low.
2. nACK is not considered asserted or deasserted until it is stable for a minimum of 75 to 130 ns.

FIGURE 21 - ECP PARALLEL PORT REVERSE TIMING

Downloaded from Arrow.com.

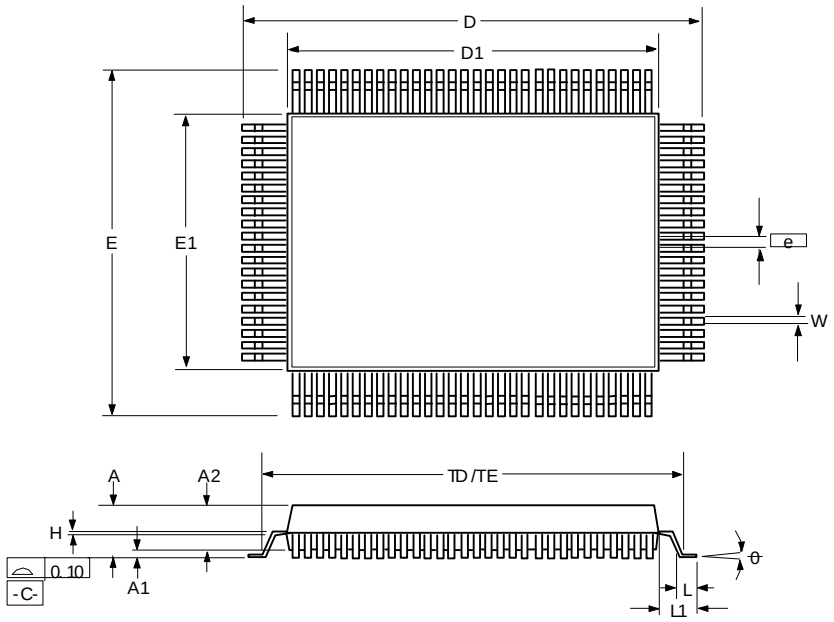

DIM	MIN	MAX	MIN	MAX
A	2.80	3.15	.110	.124
A1	0.1	0.45	.004	.018
A2	2.57	2.87	.101	.113
D	23.4	24.15	.921	.951
D1	19.9	20.1	.783	.791
E	17.4	18.15	.685	.715
E1	13.9	14.1	.547	.555
H	0.1	0.2	.004	.008
L	0.65	0.95	.026	.037
L1	1.8	2.6	.071	.102
e	0.65 BSC		.0256 BSC	
θ	0°	12°	0°	12°
W	.2	.4	.008	.016
TD(1)	21.8	22.2	.858	.874
TE(1)	15.8	16.2	.622	.638
TD(2)	22.21	22.76	.874	.896
TE(2)	16.27	16.82	.641	.662

Notes:

1) Coplanarity is 0.100mm (.004") maximum.
2) Tolerance on the position of the leads is 0.200mm (.008") maximum.
3) Package body dimensions D1 and E1 do not include the mold protrusion. Maximum mold protrusion is 0.25mm (.010").
4) Dimensions TD and TE are important for testing by robotic handler. Only above combinations of (1) or (2) are acceptable.
5) Controlling dimension: millimeter. Dimensions in inches for reference only and not necessarily accurate.

FIGURE 22 - 100 PIN QFP PACKAGE OUTLINE

Downloaded from Arrow.com.

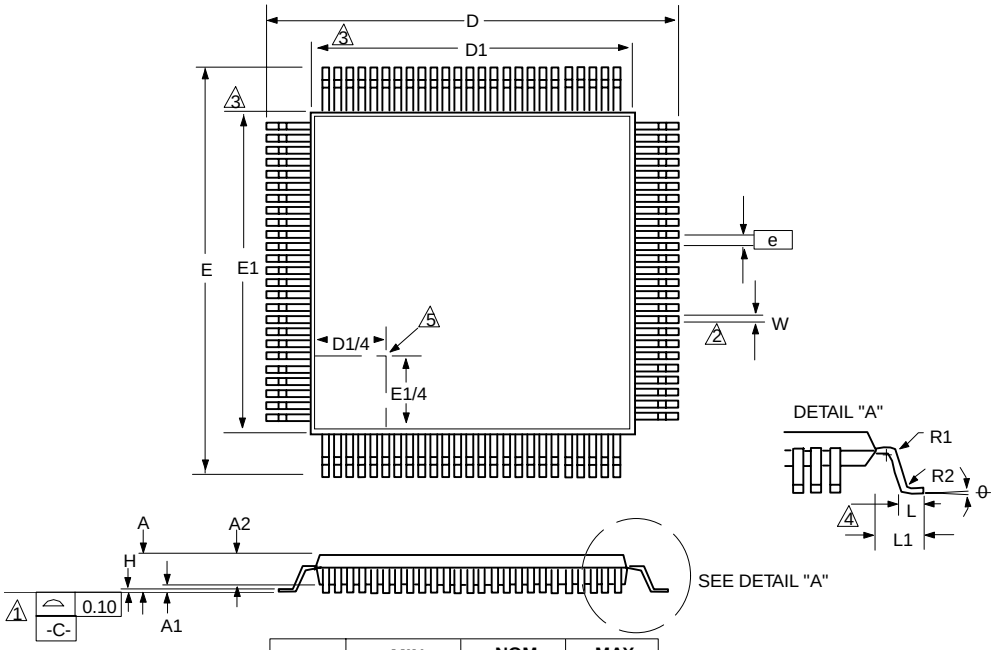

DIM	MIN	NOM	MAX
A			1.6
A1	0.05		
A2	1.35	1.40	1.45
D	15.75	16.00	16.25
D1	13.90	14.00	14.10
E	15.75	16.00	16.25
E1	13.90	14.00	14.10
H			0.20
L	0.45	0.60	0.75
L1		1.00	
e		0.50 BSC	
θ	0°		8°
W		0.25	
R1		0.20	
R2		0.20	

Notes:
1. Coplanarity is 0.100mm maximum.
2. Tolerance on the position of the leads is 0.13mm maximum.
3. Package body dimensions D1 and E1 do not include the mold protrusion. Maximum mold protrusion is 0.25mm per side.
4. Dimension for foot length L are measured at the gauge plane 0.25mm above the seating plane.
5. Details of pin 1 identifier are optional but must be located within the zone indicated.
6. Controlling dimension: millimeter

FIGURE 23 - 100 PIN TOFP PACKAGE OUTLINE

Downloaded from Arrow.com.

80 ARKAY DRIVE, HAUPPAUGE, NY 11788 (631) 435-6000, FAX (631) 273-3123

Copyright © 2007 SMSC or its subsidiaries. All rights reserved.

Circuit diagrams and other information relating to SMSC products are included as a means of illustrating typical applications. Consequently, complete information sufficient for construction purposes is not necessarily given. Although the information has been checked and is believed to be accurate, no responsibility is assumed for inaccuracies. SMSC reserves the right to make changes to specifications and product descriptions at any time without notice. Contact your local SMSC sales office to obtain the latest specifications before placing your product order. The provision of this information does not convey to the purchaser of the described semiconductor devices any licenses under any patent rights or other intellectual property rights of SMSC or others. All sales are expressly conditional on your agreement to the terms and conditions of the most recently dated version of SMSC's standard Terms of Sale Agreement dated before the date of your order (the "Terms of Sale Agreement"). The product may contain design defects or errors known as anomalies which may cause the product's functions to deviate from published specifications. Anomaly sheets are available upon request. SMSC products are not designed, intended, authorized or warranted for use in any life support or other application where product failure could cause or contribute to personal injury or severe property damage. Any and all such uses without prior written approval of an Officer of SMSC and further testing and/or modification will be fully at the risk of the customer. Copies of this document or other SMSC literature, as well as the Terms of Sale Agreement, may be obtained by visiting SMSC's website at http://www.smsc.com. SMSC is a registered trademark of Standard Microsystems Corporation ("SMSC"). Product names and company names are the trademarks of their respective holders.

SMSC DISCLAIMS AND EXCLUDES ANY AND ALL WARRANTIES, INCLUDING WITHOUT LIMITATION ANY AND ALL IMPLIED WARRANTIES OF MERCHANTABILITY, FITNESS FOR A PARTICULAR PURPOSE, TITLE, AND AGAINST INFRINGEMENT AND THE LIKE, AND ANY AND ALL WARRANTIES ARISING FROM ANY COURSE OF DEALING OR USAGE OF TRADE. IN NO EVENT SHALL SMSC BE LIABLE FOR ANY DIRECT, INCIDENTAL, INDIRECT, SPECIAL, PUNITIVE, OR CONSEQUENTIAL DAMAGES; OR FOR LOST DATA, PROFITS, SAVINGS OR REVENUES OF ANY KIND; REGARDLESS OF THE FORM OF ACTION, WHETHER BASED ON CONTRACT; TORT; NEGLIGENCE OF SMSC OR OTHERS; STRICT LIABILITY; BREACH OF WARRANTY; OR OTHERWISE; WHETHER OR NOT ANY REMEDY OF BUYER IS HELD TO HAVE FAILED OF ITS ESSENTIAL PURPOSE, AND WHETHER OR NOT SMSC HAS BEEN ADVISED OF THE POSSIBILITY OF SUCH DAMAGES.

FDC37C669 Rev. 06/29/2007

Downloaded from Arrow.com.