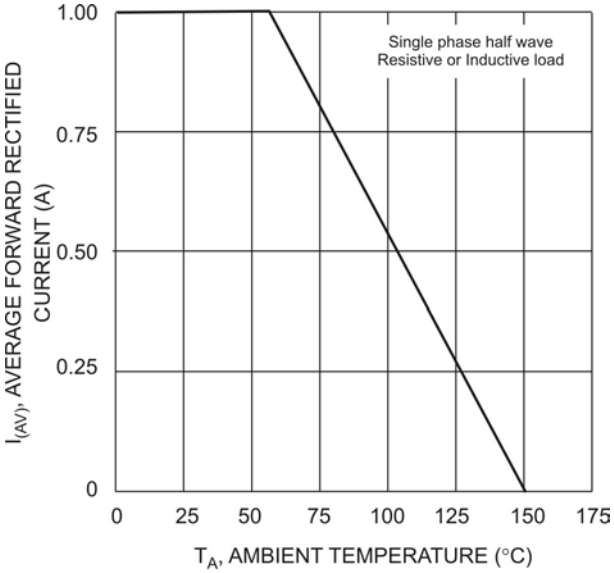

Fig. 1 Forward Current Derating Curve

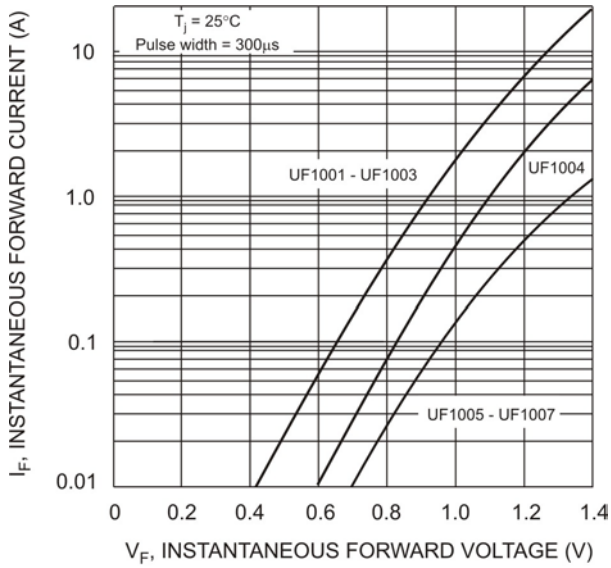

Fig. 2 Typical Forward Characteristics

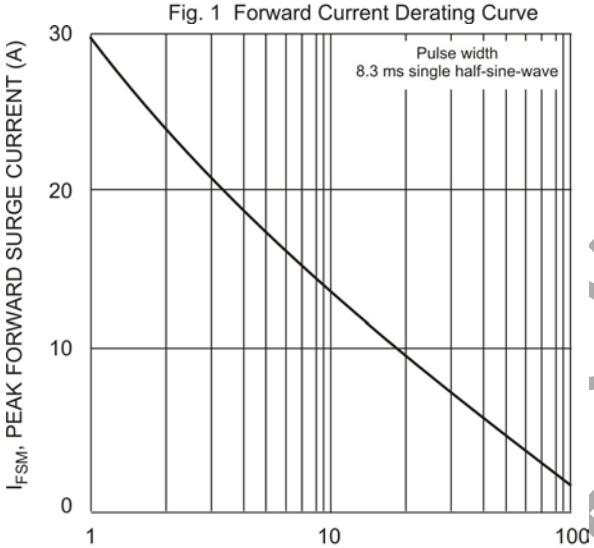

Fig. 3 Peak Forward Surge Current

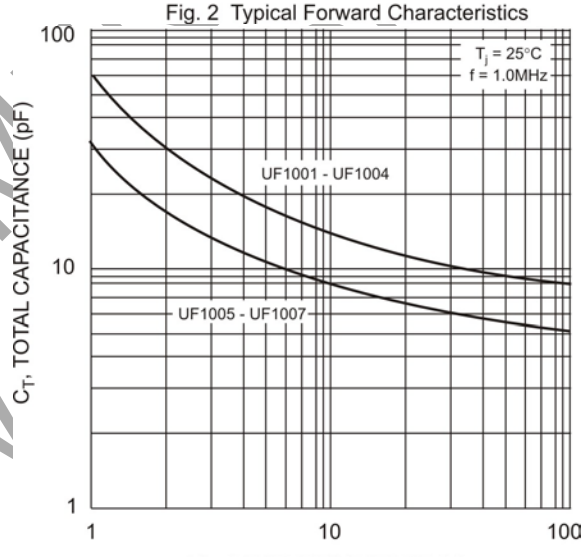

Fig. 4 Typical Total Capacitance

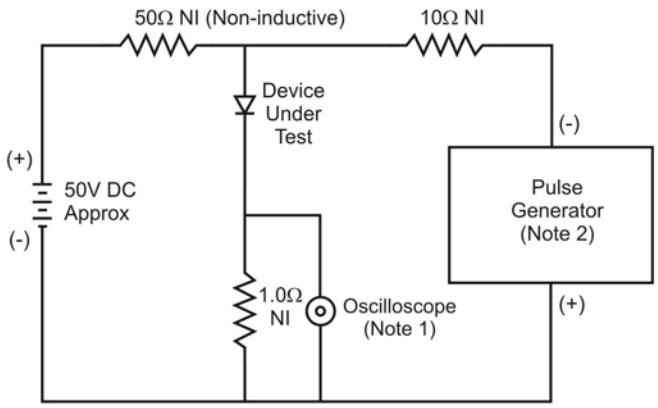

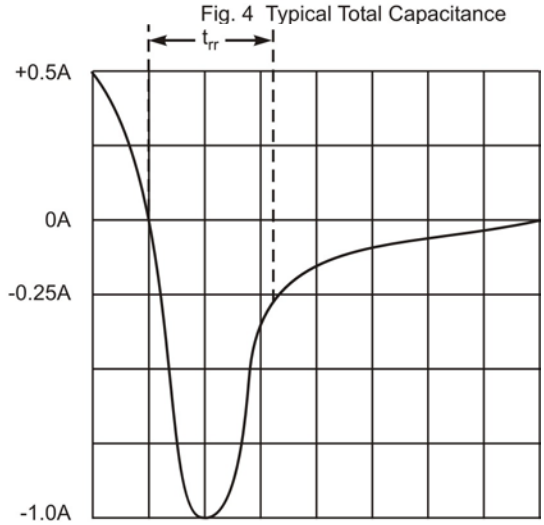

Notes:
1. Rise Time = 7.0ns max. Input Impedance = 1.0MΩ, 22pF.
2. Rise Time = 10ns max. Input Impedance = 50Ω.

Fig. 5 Reverse Recovery Time Characteristic and Test Circuit

© Diodes Incorporated
Downloaded from Arrow.com.

Ordering Information (Note 6)

Device	Packaging	Shipping
UF1001-A	DO-41	5K/Ammo Pack
UF1001-B	DO-41	1K/Bulk
UF1001-T	DO-41	5K/Tape & Reel, 13-inch
UF1002-A	DO-41	5K/Ammo Pack
UF1002-B	DO-41	1K/Bulk
UF1002-T	DO-41	5K/Tape & Reel, 13-inch
UF1003-A	DO-41	5K/Ammo Pack
UF1003-B	DO-41	1K/Bulk
UF1003-T	DO-41	5K/Tape & Reel, 13-inch
UF1004-A	DO-41	5K/Ammo Pack
UF1004-B	DO-41	1K/Bulk
UF1004-T	DO-41	5K/Tape & Reel, 13-inch
UF1005-A	DO-41	5K/Ammo Pack
UF1005-B	DO-41	1K/Bulk
UF1005-T	DO-41	5K/Tape & Reel, 13-inch
UF1006-A	DO-41	5K/Ammo Pack
UF1006-B	DO-41	1K/Bulk
UF1006-T	DO-41	5K/Tape & Reel, 13-inch
UF1007-A	DO-41	5K/Ammo Pack
UF1007-B	DO-41	1K/Bulk
UF1007-T	DO-41	5K/Tape & Reel, 13-inch

Notes: 7. For packaging details, visit our website at http://www.diodes.com/package-outlines.html.

NOT RECOMMENDED FOR NEW DESIGN

© Diodes Incorporated
Downloaded from Arrow.com.

IMPORTANT NOTICE

DIODES INCORPORATED MAKES NO WARRANTY OF ANY KIND, EXPRESS OR IMPLIED, WITH REGARDS TO THIS DOCUMENT, INCLUDING, BUT NOT LIMITED TO, THE IMPLIED WARRANTIES OF MERCHANTABILITY AND FITNESS FOR A PARTICULAR PURPOSE (AND THEIR EQUIVALENTS UNDER THE LAWS OF ANY JURISDICTION).

Diodes Incorporated and its subsidiaries reserve the right to make modifications, enhancements, improvements, corrections or other changes without further notice to this document and any product described herein. Diodes Incorporated does not assume any liability arising out of the application or use of this document or any product described herein; neither does Diodes Incorporated convey any license under its patent or trademark rights, nor the rights of others. Any Customer or user of this document or products described herein in such applications shall assume all risks of such use and will agree to hold Diodes Incorporated and all the companies whose products are represented on Diodes Incorporated website, harmless against all damages.

Diodes Incorporated does not warrant or accept any liability whatsoever in respect of any products purchased through unauthorized sales channel. Should Customers purchase or use Diodes Incorporated products for any unintended or unauthorized application, Customers shall indemnify and hold Diodes Incorporated and its representatives harmless against all claims, damages, expenses, and attorney fees arising out of, directly or indirectly, any claim of personal injury or death associated with such unintended or unauthorized application.

Products described herein may be covered by one or more United States, international or foreign patents pending. Product names and markings noted herein may also be covered by one or more United States, international or foreign trademarks.

This document is written in English but may be translated into multiple languages for reference. Only the English version of this document is the final and determinative format released by Diodes Incorporated.

LIFE SUPPORT

Diodes Incorporated products are specifically not authorized for use as critical components in life support devices or systems without the express written approval of the Chief Executive Officer of Diodes Incorporated. As used herein:

A. Life support devices or systems are devices or systems which:

1. are intended to implant into the body, or
2. support or sustain life and whose failure to perform when properly used in accordance with instructions for use provided in the labeling can be reasonably expected to result in significant injury to the user.

B. A critical component is any component in a life support device or system whose failure to perform can be reasonably expected to cause the failure of the life support device or to affect its safety or effectiveness.

Customers represent that they have all necessary expertise in the safety and regulatory ramifications of their life support devices or systems, and acknowledge and agree that they are solely responsible for all legal, regulatory and safety-related requirements concerning their products and any use of Diodes Incorporated products in such safety-critical, life support devices or systems, notwithstanding any devices- or systems-related information or support that may be provided by Diodes Incorporated. Further, Customers must fully indemnify Diodes Incorporated and its representatives against any damages arising out of the use of Diodes Incorporated products in such safety-critical, life support devices or systems.

Copyright © 2018, Diodes Incorporated

www.diodes.com

NOT RECOMMENDED FOR NEW DESIGN

© Diodes Incorporated
Downloaded from Arrow.com.