# 1 Characteristics

**Table 2. Absolute maximum ratings**

| Symbol | Parameter | | | Value | Unit |
|---|---|---|---|---|---|
| $I_{T(RMS)}$ | RMS on-state current (full sine wave) | TOP3 | $T_c$ = 105° C | 25 | A |
| | | $D^2$PAK / TO-220AB | $T_c$ = 100° C | | |
| | | RD91 Ins/ TOP3 Ins. | $T_c$ = 100° C | | |
| | | TO-220AB Ins. | $T_c$ = 75° C | | |
| $I_{TSM}$ | Non repetitive surge peak on-state current (full cycle, $T_j$ initial = 25° C) | F = 50 Hz | t = 20 ms | 250 | A |
| | | F = 60 Hz | t = 16.7 ms | 260 | |
| $I^2t$ | $I^2t$ Value for fusing | $t_p$ = 10 ms | | 340 | $A^2s$ |
| dI/dt | Critical rate of rise of on-state current $I_G = 2 \times I_{GT}$ , $t_r \leq 100$ ns | F = 120 Hz | $T_j$ = 125° C | 50 | A/µs |
| $V_{DSM}/V_{RSM}$ | Non repetitive surge peak off-state voltage | $t_p$ = 10 ms | $T_j$ = 25° C | $V_{DRM}/V_{RRM}$ + 100 | V |
| $I_{GM}$ | Peak gate current | $t_p$ = 20 µs | $T_j$ = 125° C | 4 | A |
| $P_{G(AV)}$ | Average gate power dissipation | | $T_j$ = 125° C | 1 | W |
| $T_{stg}$<br>$T_j$ | Storage junction temperature range<br>Operating junction temperature range | | | - 40 to + 150<br>- 40 to + 125 | ° C |

**Table 3. Electrical characteristics ($T_j$ = 25° C, unless otherwise specified), Snubberless and logic level (3 quadrants) T25, BTA/BTB24...W, BTA25...W, BTA26...W**

| Symbol | Test Conditions | Quadrant | | T25 | BTA/BTB | | Unit |
|---|---|---|---|---|---|---|---|
| | | | | T2535 | CW | BW | |
| $I_{GT}$(1) | $V_D$ = 12 V $R_L$ = 33 Ω | I - II - III | MAX. | 35 | 35 | 50 | mA |
| $V_{GT}$ | | I - II - III | MAX. | 1.3 | | | V |
| $V_{GD}$ | $V_D = V_{DRM}$ $R_L$ = 3.3 kΩ<br>$T_j$ = 125° C | I - II - III | MIN. | 0.2 | | | V |
| $I_H$(2) | $I_T$ = 500 mA | | MAX. | 50 | 50 | 75 | mA |
| $I_L$ | $I_G = 1.2\ I_{GT}$ | I - III | MAX. | 70 | 70 | 80 | mA |
| | | II | | 80 | 80 | 100 | |
| dV/dt (2) | $V_D$ = 67 %$V_{DRM}$ gate open | $T_j$ = 125° C | MIN. | 500 | 500 | 1000 | V/µs |
| (dI/dt)c (2) | Without snubber | $T_j$ = 125° C | MIN. | 13 | 13 | 22 | A/ms |

1. minimum $I_{GT}$ is guaranted at 5% of $I_{GT}$ max.
2. for both polarities of A2 referenced to A1.



Downloaded from Arrow.com.

**Table 4. Electrical characteristics ($T_j$ = 25° C, unless otherwise specified), standard (4 quadrants), BTB24...B, BTA25...B, BTA26...B, BTB26...B**

| Symbol | Test Conditions | Quadrant | | Value | Unit |
|---|---|---|---|---|---|
| $I_{GT}$ (1) | $V_D$ = 12 V $R_L$ = 33 Ω | I - II - III | MAX. | 50 | mA |
| | | IV | | 100 | |
| $V_{GT}$ | | ALL | MAX. | 1.3 | V |
| $V_{GD}$ | $V_D = V_{DRM}$ $R_L$ = 3.3 kΩ $T_j$ = 125° C | ALL | MIN. | 0.2 | V |
| $I_H$(2)) | $I_T$ = 500 mA | | MAX. | 80 | mA |
| $I_L$ | $I_G = 1.2\ I_{GT}$ | I - III - IV | MAX. | 70 | mA |
| | | II | | 160 | |
| dV/dt(2) | $V_D$ = 67 %$V_{DRM}$ gate open | $T_j$ = 125° C | MIN. | 500 | V/µs |
| (dV/dt)c (2) | (dI/dt)c = 13.3 A/ms | $T_j$ = 125° C | MIN. | 10 | V/µs |

1. minimum $I_{GT}$ is guaranted at 5% of $I_{GT}$ max.
2. for both polarities of A2 referenced to A1.

**Table 5. Static characteristics**

| Symbol | Test Conditions | | | Value | Unit |
|---|---|---|---|---|---|
| $V_{TM}$ (1) | $I_{TM}$ = 35 A $t_p$ = 380 µs | $T_j$ = 25° C | MAX. | 1.55 | V |
| $V_{t0}$ (1) | Threshold voltage | $T_j$ = 125° C | MAX. | 0.85 | V |
| $R_d$ (1) | Dynamic resistance | $T_j$ = 125° C | MAX. | 16 | mΩ |
| $I_{DRM}$ $I_{RRM}$ | $V_{DRM} = V_{RRM}$ | $T_j$ = 25° C | MAX. | 5 | µA |
| | | $T_j$ = 125° C | | 3 | mA |

1. for both polarities of A2 referenced to A1.

**Table 6. Thermal resistance**

| Symbol | Parameter | | | Value | Unit |
|---|---|---|---|---|---|
| $R_{th(j-c)}$ | Junction to case (AC) | | TOP 3 | 0.6 | ° C/W |
| | | | $D^2$PAK / TO-220AB | 0.8 | |
| | | | RD91 Insulated / TOP3 Insulated | 0.9 | |
| | | | TO-220AB Insulated | 1.7 | |
| $R_{th(j-a)}$ | Junction to ambient | (1)S = 1 $cm^2$ | $D^2$PAK | 45 | ° C/W |
| | | | TOP3 / TOP3 Insulated | 50 | |
| | | | TO-220AB / TO-220AB Insulated | 60 | |

1. S = Copper surface under tab.



Downloaded from Arrow.com.

**Figure 1. Maximum power dissipation versus RMS on-state current (full cycle)**

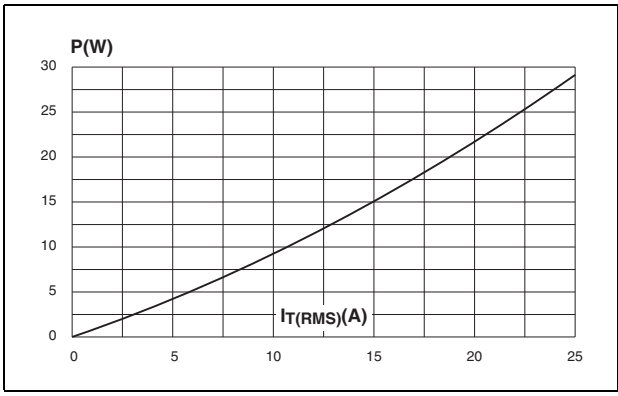


**Figure 2. RMS on-state current versus case temperature (full cycle)**

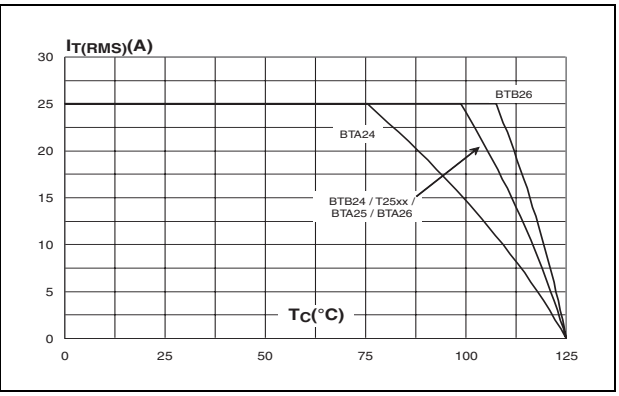


**Figure 3. $D^2PAK$ RMS on-state current versus ambient temperature (printed circuit board FR4, copper thickness: 35µm) (full cycle)**

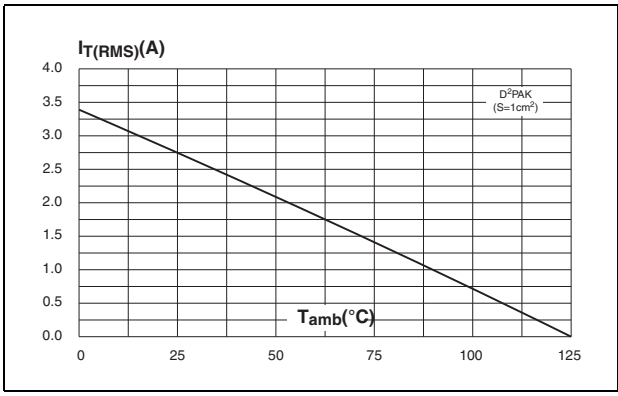


**Figure 4. Relative variation of thermal impedance versus pulse duration**

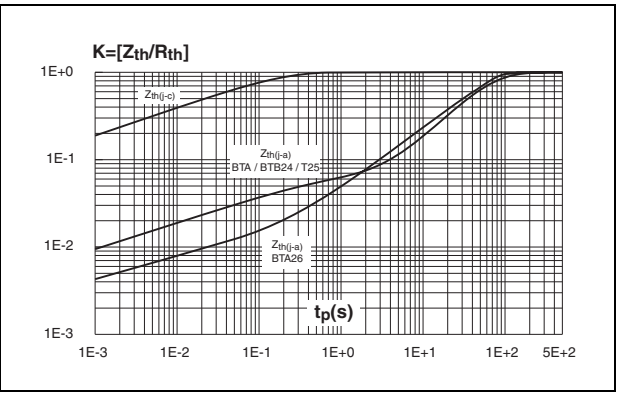


**Figure 5. On-state characteristics (maximum values)**

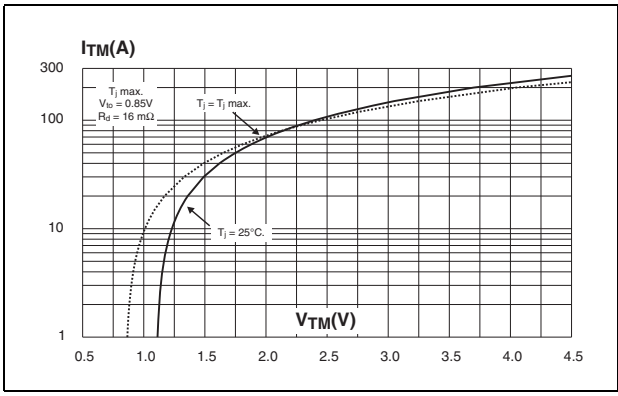


**Figure 6. Surge peak on-state current versus number of cycles**

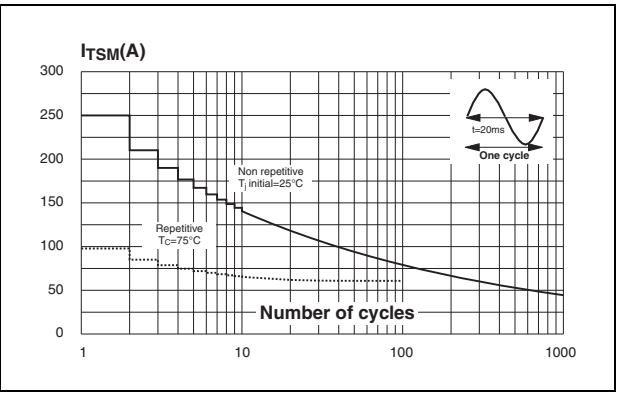




Downloaded from Arrow.com.

**Figure 7. Non-repetitive surge peak on-state current for a sinusoidal pulse with width $t_p$ < 10 ms and corresponding value of $I^2t$**

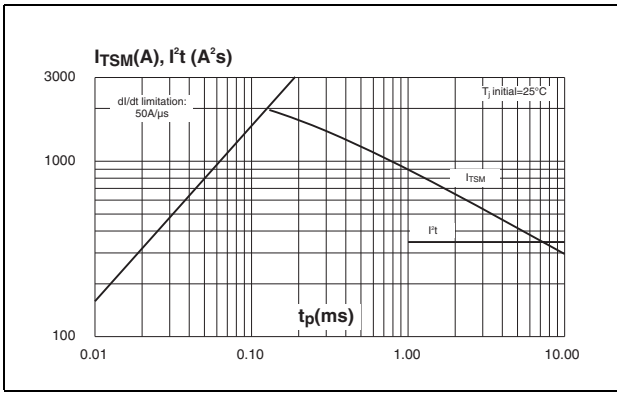


**Figure 8. Relative variation of gate trigger current, holding current and latching current versus junction temperature (typical values)**

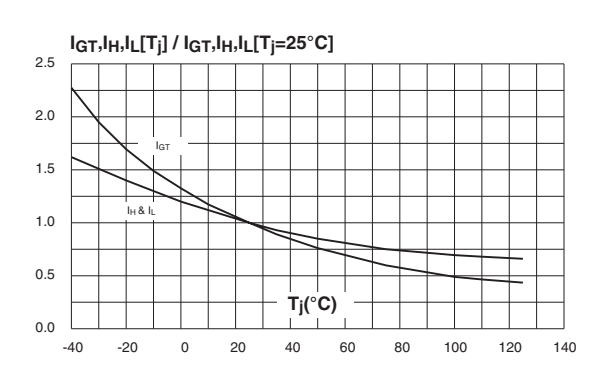


**Figure 9. Relative variation of critical rate of decrease of main current versus (dV/dt)c (typical values)**

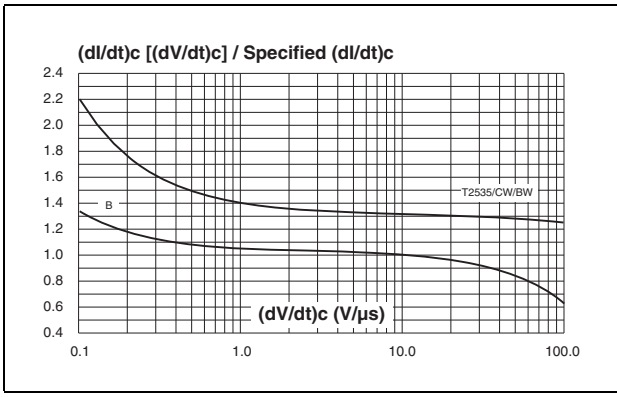


**Figure 10. Relative variation of critical rate of decrease of main current versus $T_j$**

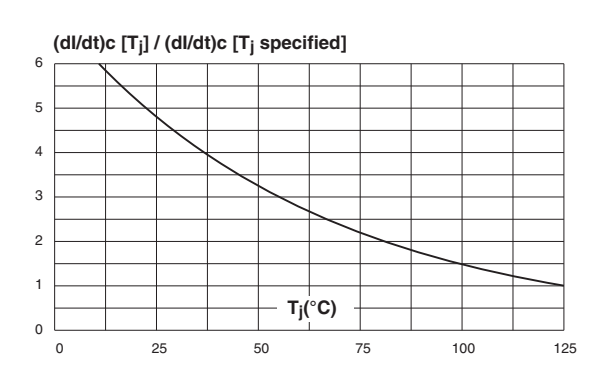


**Figure 11. $D^2PAK$ thermal resistance junction to ambient versus copper surface under tab (printed circuit board FR4, copper thickness: 35 µm)**

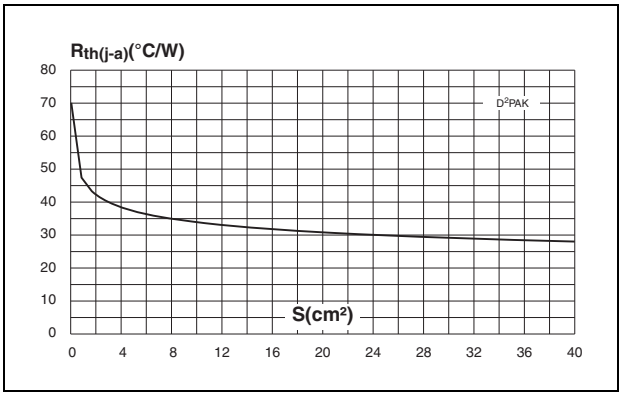




Downloaded from Arrow.com.

# 2 Ordering information scheme

**Figure 12. BTA and BTB series**

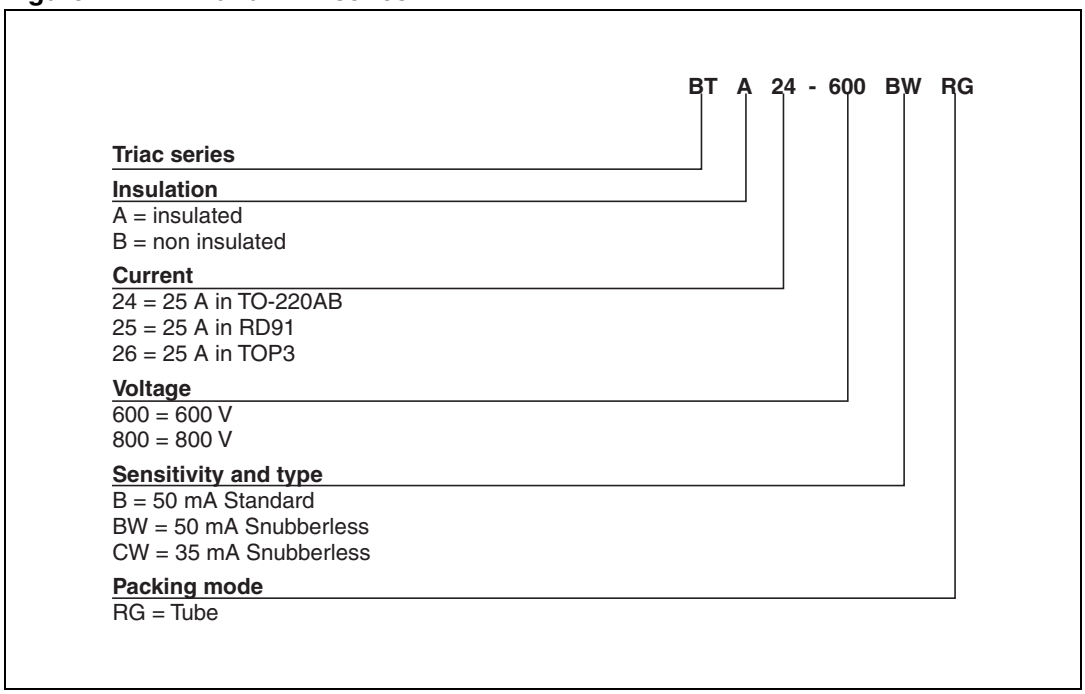


**Figure 13. T25 series**

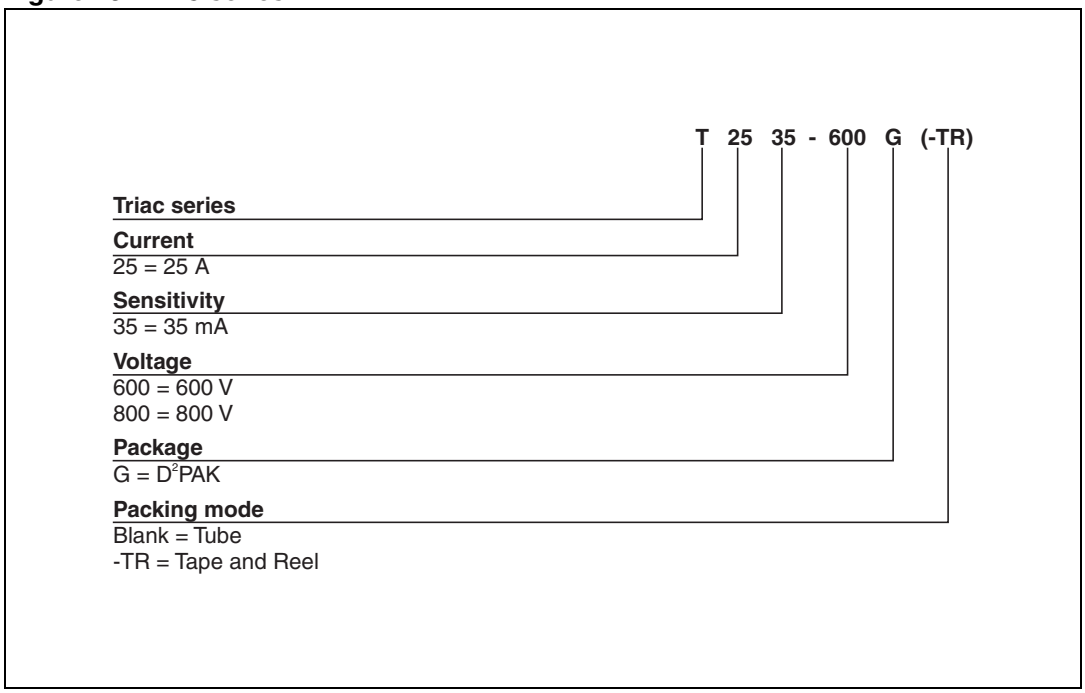




Downloaded from Arrow.com.

# 3 Package information

- Epoxy meets UL94,V0
- Cooling method: C
- Recommended torque value: 0.4 - 0.5 Nm (TO-220AB), 0.9 - 1.2 Nm (TOP3 and RD91)
- Maximum torque value for BTB24 is 0.5 Nm

**Table 7. D²PAK dimensions**

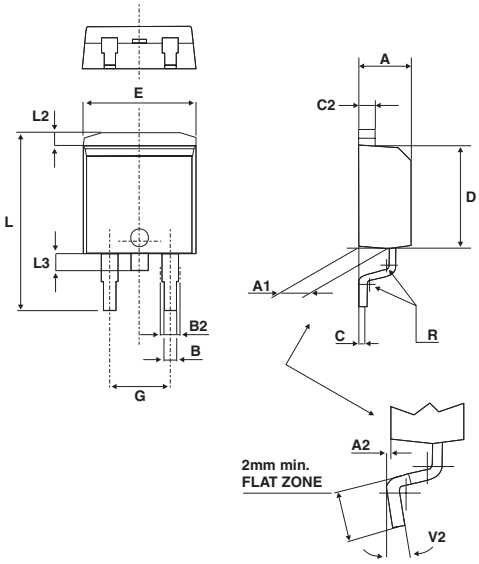


| REF. | DIMENSIONS | | | | | |
|---|---|---|---|---|---|---|
| | Millimeters | | | Inches | | |
| | Min. | Typ. | Max. | Min. | Typ. | Max. |
| A | 4.30 | | 4.60 | 0.169 | | 0.181 |
| A1 | 2.49 | | 2.69 | 0.098 | | 0.106 |
| A2 | 0.03 | | 0.23 | 0.001 | | 0.009 |
| B | 0.70 | | 0.93 | 0.027 | | 0.037 |
| B2 | 1.25 | 1.40 | | 0.048 | 0.055 | |
| C | 0.45 | | 0.60 | 0.017 | | 0.024 |
| C2 | 1.21 | | 1.36 | 0.047 | | 0.054 |
| D | 8.95 | | 9.35 | 0.352 | | 0.368 |
| E | 10.00 | | 10.28 | 0.393 | | 0.405 |
| G | 4.88 | | 5.28 | 0.192 | | 0.208 |
| L | 15.00 | | 15.85 | 0.590 | | 0.624 |
| L2 | 1.27 | | 1.40 | 0.050 | | 0.055 |
| L3 | 1.40 | | 1.75 | 0.055 | | 0.069 |
| R | | 0.40 | | | 0.016 | |
| V2 | 0° | | 8° | 0° | | 8° |

**Figure 14. D²PAK footprint dimensions (in millimeters)**

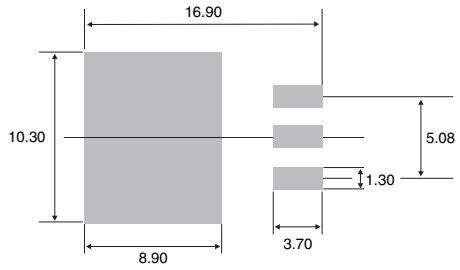




Downloaded from Arrow.com.

**Table 8. RD91 dimensions**

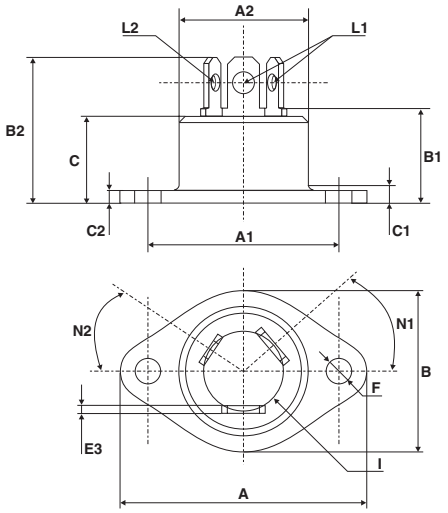


| REF. | DIMENSIONS | | | |
|---|---|---|---|---|
| | Millimeters | | Inches | |
| | Min. | Max. | Min. | Max. |
| A | | 40.00 | | 1.575 |
| A1 | 29.90 | 30.30 | 1.177 | 1.193 |
| A2 | | 22.00 | | 0.867 |
| B | | 27.00 | | 1.063 |
| B1 | 13.50 | 16.50 | 0.531 | 0.650 |
| B2 | | 24.00 | | 0.945 |
| C | | 14.00 | | 0.551 |
| C1 | | 3.50 | | 0.138 |
| C2 | 1.95 | 3.00 | 0.077 | 0.118 |
| E3 | 0.70 | 0.90 | 0.027 | 0.035 |
| F | 4.00 | 4.50 | 0.157 | 0.177 |
| I | 11.20 | 13.60 | 0.441 | 0.535 |
| L1 | 3.10 | 3.50 | 0.122 | 0.138 |
| L2 | 1.70 | 1.90 | 0.067 | 0.075 |
| N1 | 33° | 43° | 33° | 43° |
| N2 | 28° | 38° | 28° | 38° |



Downloaded from Arrow.com.

**Table 9. TOP3 (insulated and non_insulated) dimensions**

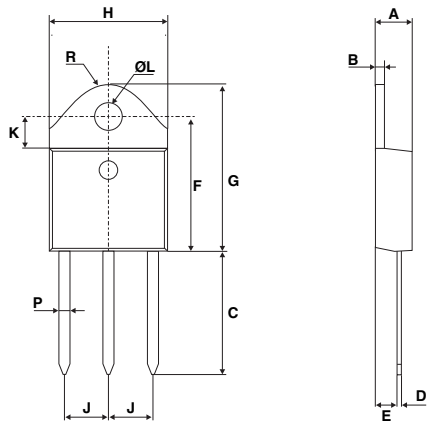


| REF. | DIMENSIONS | | | | | |
|---|---|---|---|---|---|---|
| | Millimeters | | | Inches | | |
| | Min. | Typ. | Max. | Min. | Typ. | Max. |
| A | 4.4 | | 4.6 | 0.173 | | 0.181 |
| B | 1.45 | | 1.55 | 0.057 | | 0.061 |
| C | 14.35 | | 15.60 | 0.565 | | 0.614 |
| D | 0.5 | | 0.7 | 0.020 | | 0.028 |
| E | 2.7 | | 2.9 | 0.106 | | 0.114 |
| F | 15.8 | | 16.5 | 0.622 | | 0.650 |
| G | 20.4 | | 21.1 | 0.815 | | 0.831 |
| H | 15.1 | | 15.5 | 0.594 | | 0.610 |
| J | 5.4 | | 5.65 | 0.213 | | 0.222 |
| K | 3.4 | | 3.65 | 0.134 | | 0.144 |
| ØL | 4.08 | | 4.17 | 0.161 | | 0.164 |
| P | 1.20 | | 1.40 | 0.047 | | 0.055 |
| R | | 4.60 | | | 0.181 | |



Downloaded from Arrow.com.

**Table 10. TO-220AB (insulated and non-insulated) dimensions**

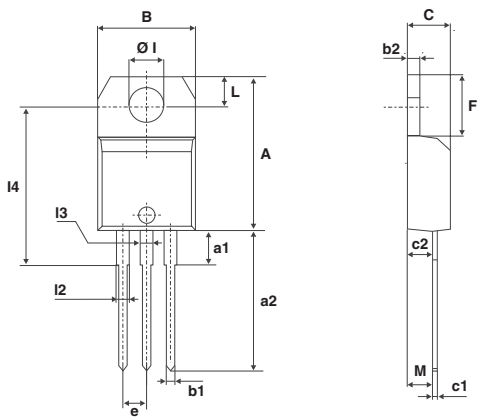


| REF. | DIMENSIONS | | | | | |
|---|---|---|---|---|---|---|
| | Millimeters | | | Inches | | |
| | Min. | Typ. | Max. | Min. | Typ. | Max. |
| A | 15.20 | | 15.90 | 0.598 | | 0.625 |
| a1 | | 3.75 | | | 0.147 | |
| a2 | 13.00 | | 14.00 | 0.511 | | 0.551 |
| B | 10.00 | | 10.40 | 0.393 | | 0.409 |
| b1 | 0.61 | | 0.88 | 0.024 | | 0.034 |
| b2 | 1.23 | | 1.32 | 0.048 | | 0.051 |
| C | 4.40 | | 4.60 | 0.173 | | 0.181 |
| c1 | 0.49 | | 0.70 | 0.019 | | 0.027 |
| c2 | 2.40 | | 2.72 | 0.094 | | 0.107 |
| e | 2.40 | | 2.70 | 0.094 | | 0.106 |
| F | 6.20 | | 6.60 | 0.244 | | 0.259 |
| ØI | 3.75 | | 3.85 | 0.147 | | 0.151 |
| l4 | 15.80 | 16.40 | 16.80 | 0.622 | 0.646 | 0.661 |
| L | 2.65 | | 2.95 | 0.104 | | 0.116 |
| l2 | 1.14 | | 1.70 | 0.044 | | 0.066 |
| l3 | 1.14 | | 1.70 | 0.044 | | 0.066 |
| M | | 2.60 | | | 0.102 | |

In order to meet environmental requirements, ST offers these devices in ECOPACK® packages. These packages have a lead-free second level interconnect. The category of second level interconnect is marked on the package and on the inner box label, in compliance with JEDEC Standard JESD97. The maximum ratings related to soldering conditions are also marked on the inner box label. ECOPACK is an ST trademark. ECOPACK specifications are available at: www.st.com.



Downloaded from Arrow.com.

# 4 Ordering information

**Table 11. Ordering information**

| Ordering type | Marking | Package | Weight | Base qty | Delivery mode |
|---|---|---|---|---|---|
| BTA/BTB24-xxxyzRG | BTA/BTB24 xxxyz | TO-220AB | 2.3 g | 50 | Tube |
| BTA25-xxxyz | BTA25xxxyz | RD91 | 20 g | 25 | Bulk |
| BTA26-xxxyRG | BTA26xxxyz | TOP3 Ins. | 4.5 g | 30 | Tube |
| BTB26-600BRG | BTB26600B | TOP3 | 4.5 g | 30 | Tube |
| T2535-xxxG | T2535 xxxG | $D^2PAK$ | 1.5 g | 50 | Tube |
| T2535-xxxG-TR | T2535 xxxG | | | 1000 | Tape and reel |

**Note:** xxx = voltage, y = sensitivity, z = type

# 5 Revision history

**Table 12. Revision history**

| Date | Revision | Description of changes |
|---|---|---|
| Oct-2002 | 6A | Previous update. |
| 13-Feb-2006 | 7 | TO-220AB delivery mode changed from bulk to tube.<br>ECOPACK statement added. |
| 31-May-2006 | 8 | Reformatted to current standard. $T_c$ in figure 3 changed to $T_{amb}$ |
| 31-Jul-2006 | 9 | Typing error corrected on page 1 (BTB124 instead of BTB24) |
| 05-Jul-2007 | 10 | Added BTB26-600BRG. Restructured cover page and section *2: Ordering information scheme on page 6* to simplify product selection. Thermal resistance values updated in *Table 6* and *Figure 2*. Graphic for $I^2t$ updated in *Figure 7*. |



Downloaded from Arrow.com.

**Please Read Carefully:**

Information in this document is provided solely in connection with ST products. STMicroelectronics NV and its subsidiaries (“ST”) reserve the right to make changes, corrections, modifications or improvements, to this document, and the products and services described herein at any time, without notice.

All ST products are sold pursuant to ST’s terms and conditions of sale.

Purchasers are solely responsible for the choice, selection and use of the ST products and services described herein, and ST assumes no liability whatsoever relating to the choice, selection or use of the ST products and services described herein.

No license, express or implied, by estoppel or otherwise, to any intellectual property rights is granted under this document. If any part of this document refers to any third party products or services it shall not be deemed a license grant by ST for the use of such third party products or services, or any intellectual property contained therein or considered as a warranty covering the use in any manner whatsoever of such third party products or services or any intellectual property contained therein.

**UNLESS OTHERWISE SET FORTH IN ST’S TERMS AND CONDITIONS OF SALE ST DISCLAIMS ANY EXPRESS OR IMPLIED WARRANTY WITH RESPECT TO THE USE AND/OR SALE OF ST PRODUCTS INCLUDING WITHOUT LIMITATION IMPLIED WARRANTIES OF MERCHANTABILITY, FITNESS FOR A PARTICULAR PURPOSE (AND THEIR EQUIVALENTS UNDER THE LAWS OF ANY JURISDICTION), OR INFRINGEMENT OF ANY PATENT, COPYRIGHT OR OTHER INTELLECTUAL PROPERTY RIGHT.**

**UNLESS EXPRESSLY APPROVED IN WRITING BY AN AUTHORIZED ST REPRESENTATIVE, ST PRODUCTS ARE NOT RECOMMENDED, AUTHORIZED OR WARRANTED FOR USE IN MILITARY, AIR CRAFT, SPACE, LIFE SAVING, OR LIFE SUSTAINING APPLICATIONS, NOR IN PRODUCTS OR SYSTEMS WHERE FAILURE OR MALFUNCTION MAY RESULT IN PERSONAL INJURY, DEATH, OR SEVERE PROPERTY OR ENVIRONMENTAL DAMAGE. ST PRODUCTS WHICH ARE NOT SPECIFIED AS "AUTOMOTIVE GRADE" MAY ONLY BE USED IN AUTOMOTIVE APPLICATIONS AT USER’S OWN RISK.**

Resale of ST products with provisions different from the statements and/or technical features set forth in this document shall immediately void any warranty granted by ST for the ST product or service described herein and shall not create or extend in any manner whatsoever, any liability of ST.

ST and the ST logo are trademarks or registered trademarks of ST in various countries.

Information in this document supersedes and replaces all information previously supplied.

The ST logo is a registered trademark of STMicroelectronics. All other names are the property of their respective owners.

© 2007 STMicroelectronics - All rights reserved

STMicroelectronics group of companies

Australia - Belgium - Brazil - Canada - China - Czech Republic - Finland - France - Germany - Hong Kong - India - Israel - Italy - Japan - Malaysia - Malta - Morocco - Singapore - Spain - Sweden - Switzerland - United Kingdom - United States of America

**www.st.com**



Downloaded from Arrow.com.