Tous droits strictement reserves. Reproduction ou communication a des tiers interdite sous quelque forme que ce soit sans autorisation ecrite du propletaire. Proprlete de c FCI. Droits de reproduction FCI.

All rights strictly reserved. Reproduction or issue to third parties in any form whatever is not permitted without written authority from the proprietor. Property of FCI. Copyright FCI.

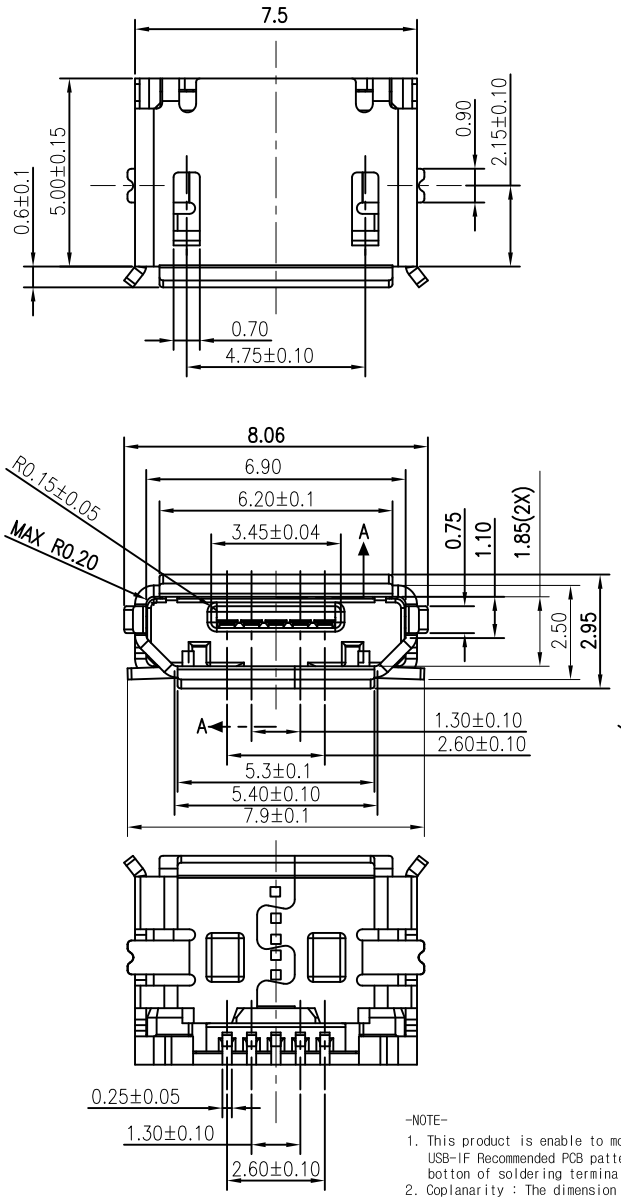

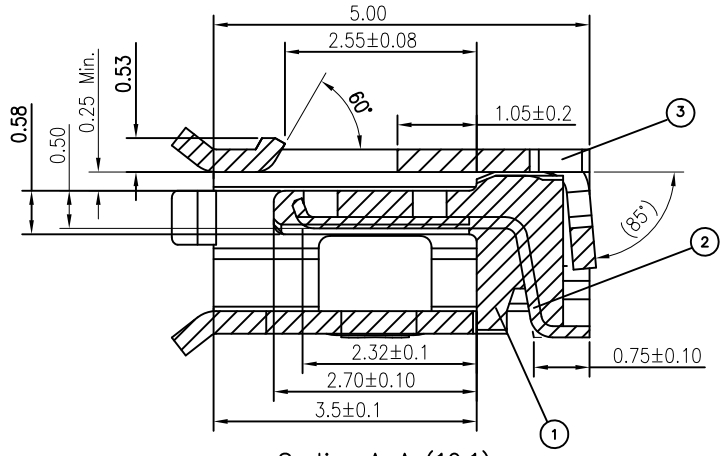

Section A–A (10:1)

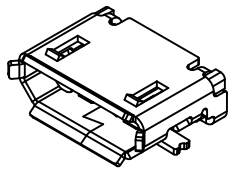

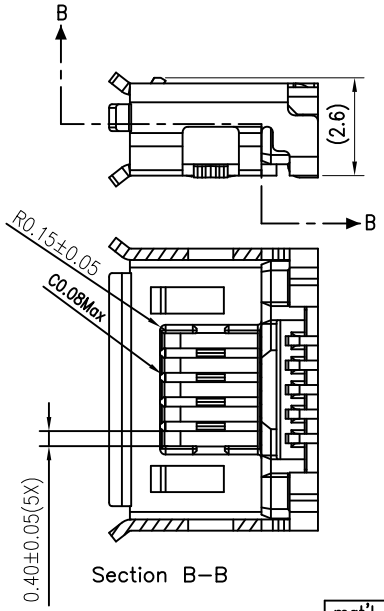

Section B–B

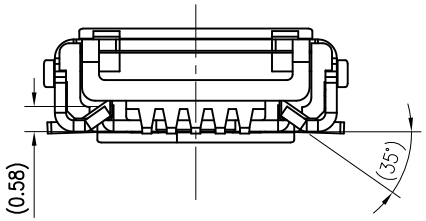

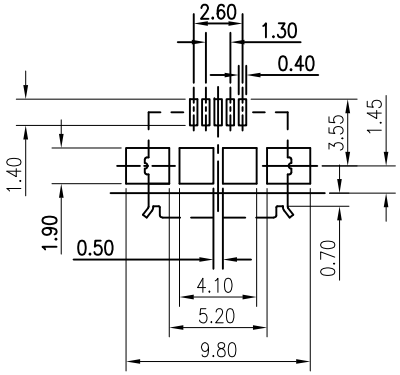

RECOMMENDED PCB LAYOUT

-NOTE-

1. This product is enable to mount both USB-IF Recommended PCB pattern botton of soldering terminals
2. Coplanarity : The dimension between flat tool and when connector put on the flat tool like PCB Signal Contact ter' solder tail : Max 0.08 mm Metal tab : Max 0.1mm
3. PRODUCT NUMBERING: 10104110 - 0001 LF
4. The "LF" is meant lead free and can withstand expose to 260° C peak temperature for 10 seconds in IR reflow process.

ITEM	DESCRIPTION	MATERIAL	FINISH	Q'TY
1	HOUSING	THERMOPLASTIC+GF	BLACK	1
2	CONTACT	COPPER ALLOY	PLATING : Au PLATED OVER NICKEL OVERALL	5
3	SHELL	STAINLESS STEEL	PLATING : TIN OVER NICKEL OVERALL	1

mat'l. code			
ltr	ecn no	dr	date
A	T10-0002	J.H	1/7/10
B	T10-0063	J.H	5/12/10
C	T11-0016	J.H	3/16/11

tolerances unless otherwise specified		
linear	.X ± 0.38	
	.XX ± 0.25	
	.XXX ± 0.10	
angles	0° ±2°	
dr	JASON HSU	1/7/10
engr	JASON HSU	1/7/10
chr	GARY HSIEH	1/7/10
appd	JOSEPH HSIA	1/7/10

CUSTOMER COPY

projection

MM

scale 5:1

FCI www.fciconnect.com

title: MICRO USB B TYPE RECEPTACLE

product family: USB

code: TWN

size: A4

dwg no: 10104110

sheet 1 of 1

sheet index	revision	C
	sheet	1

cage code

ACAD PDM: Rev:C STATUS: Released Printed: Mar 22, 2011

Downloaded from Arrow.com.