2x3 POS AND 2x4 POS CONFIGURATION
NO LATCHING AVAILABLE FOR 2x2 POS

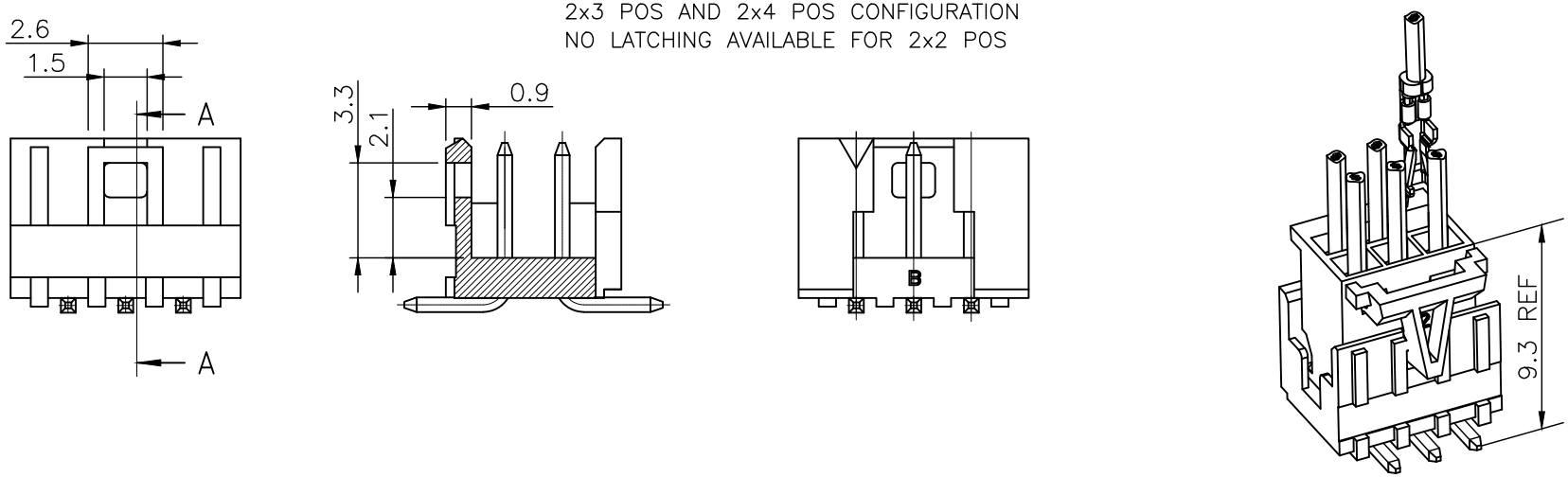

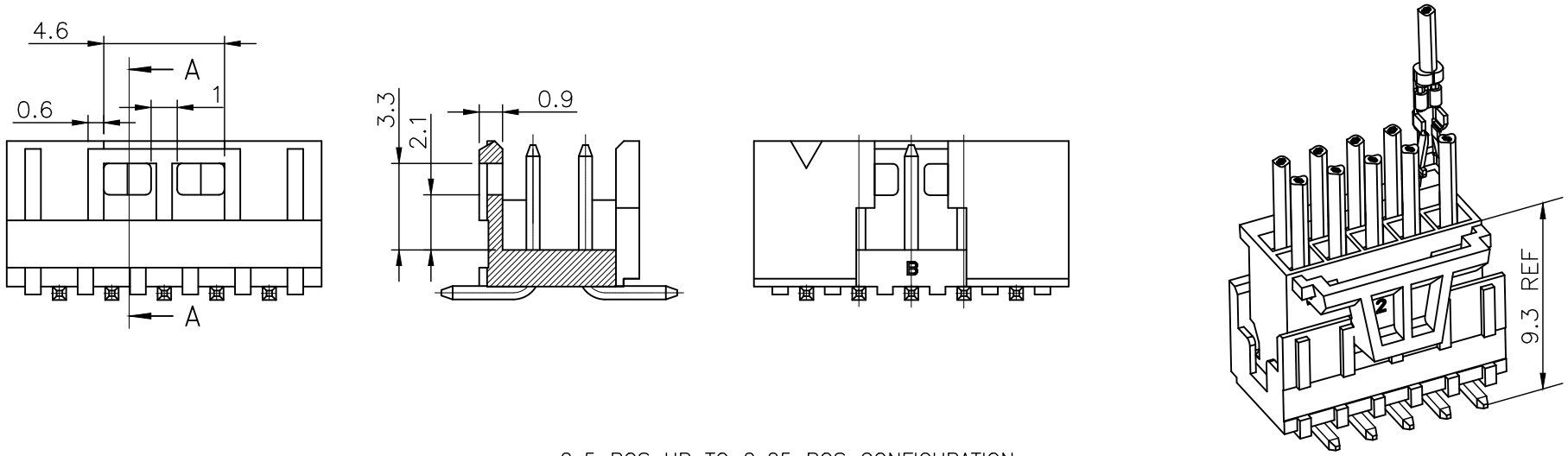

2x5 POS UP TO 2x25 POS CONFIGURATION

LATCHING FEATURES WHEN USED IN COMBINATION
WITH ACTIVE LATCH HOUSING 10073599

mat'l. code				surface	tolerance	projection
SEE NOTES				ISO 1302	ISO 406 ISO	101
ltr	ecn no	dr	date	tolerances unless otherwise specified		
A	F08-0113	LMU	08.01.17	angles	linear X.X ±0.3	mm
B	F-35976	DDE	20.01.24		X.XX ±0.13	
					X.XXX ±0.05	scale 1:1
				dr	L.MULIN 07.11.06	
				engr	J.COMPAGNON 07.11.06	
				chr		
				appd	JM.C 07.11.06	

product family	
MINITEK	
title	SHR HEADER 2.00 VERTICAL SMT
dwg no 98424	sheet 2 of –
size	A3
type	CUSTOMER Drawing

sheet index	revision sheet

form: A3

PDS: Rev :Y STATUS:Released Printed: Feb 19, 2021

FCIconnect.com
Copyright FCI
Downloaded from Arrow.com.