Table of Contents

Features..... 1

Packages..... 1

1. Package Types (not to scale)..... 4

2. Pin Descriptions..... 5

2.1. Device Address Inputs (A1, A2)..... 5
2.2. Ground..... 5
2.3. Serial Data (SDA)..... 5
2.4. Serial Clock (SCL)..... 6
2.5. Write-Protect (WP)..... 6
2.6. Device Power Supply..... 6

3. Description..... 7

3.1. System Configuration Using Two-Wire Serial EEPROMs..... 7
3.2. Block Diagram..... 8

4. Electrical Characteristics..... 9

4.1. Absolute Maximum Ratings..... 9
4.2. DC and AC Operating Range..... 9
4.3. DC Characteristics..... 9
4.4. AC Characteristics..... 10
4.5. Electrical Specifications..... 12

5. Device Operation and Communication..... 14

5.1. Clock and Data Transition Requirements..... 14
5.2. Start and Stop Conditions..... 14
5.3. Acknowledge and No-Acknowledge..... 15
5.4. Standby Mode..... 15
5.5. Software Reset..... 16

6. Memory Organization..... 17

6.1. Device Addressing..... 17

7. Write Operations..... 19

7.1. Byte Write..... 19
7.2. Page Write..... 19
7.3. Acknowledge Polling..... 20
7.4. Write Cycle Timing..... 21
7.5. Write Protection..... 21

8. Read Operations..... 22

8.1. Current Address Read..... 22
8.2. Random Read..... 22

Downloaded from Arrow.com.

8.3. Sequential Read....23

9. Device Default Condition from Microchip.... 24

10. Packaging Information....25

10.1. Package Marking Information....25

11. Revision History....33

The Microchip Web Site.... 34

Customer Change Notification Service....34

Customer Support.... 34

Product Identification System....35

Microchip Devices Code Protection Feature.... 35

Legal Notice....36

Trademarks.... 36

Quality Management System Certified by DNV....37

Worldwide Sales and Service....38

Downloaded from Arrow.com.

1. Package Types (not to scale)

8-Lead PDIP/SOIC/TSSOP
(Top View)

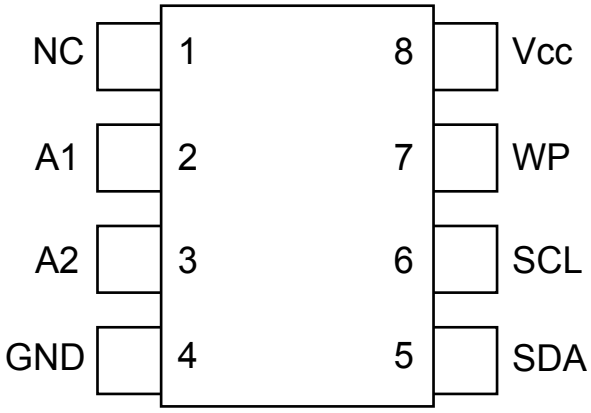

Downloaded from Arrow.com.

2. Pin Descriptions

The descriptions of the pins are listed in Table 2-1.

Table 2-1. Pin Function Table

Name	8-Lead PDIP	8-Lead SOIC	8-Lead TSSOP	Function
NC	1	1	1	No Connect
A1(1)	2	2	2	Device Address Input
A2(1)	3	3	3	Device Address Input
GND	4	4	4	Ground
SDA	5	5	5	Serial Data
SCL	6	6	6	Serial Clock
WP(1)	7	7	7	Write-Protect
V_{CC}	8	8	8	Device Power Supply

Note:

1. If the A1, A2 or WP pins are not driven, they are internally pulled down to GND. In order to operate in a wide variety of application environments, the pull-down mechanism is intentionally designed to be somewhat strong. Once these pins are biased above the CMOS input buffer's trip point (~0.5 x V_{CC}), the pull-down mechanism disengages. Microchip recommends connecting these pins to a known state whenever possible.

2.1 Device Address Inputs (A1, A2)

The A1 and A2 pins are device address inputs that are hardwired (directly to GND or to V_{CC}) for compatibility with other two-wire Serial EEPROM devices. When the pins are hardwired, as many as four devices may be addressed on a single bus system. A device is selected when a corresponding hardware and software match is true. If these pins are left floating, the A1 and A2 pins will be internally pulled down to GND. However, due to capacitive coupling that may appear in customer applications, Microchip recommends always connecting the address pins to a known state. When using a pull-up resistor, Microchip recommends using 10 kΩ or less.

2.2 Ground

The ground reference for the power supply. GND should be connected to the system ground.

2.3 Serial Data (SDA)

The SDA pin is an open-drain bidirectional input/output pin used to serially transfer data to and from the device. The SDA pin must be pulled high using an external pull-up resistor (not to exceed 10 kΩ in value) and may be wire-ORed with any number of other open-drain or open-collector pins from other devices on the same bus.

Downloaded from Arrow.com.

2.4 Serial Clock (SCL)

The SCL pin is used to provide a clock to the device and to control the flow of data to and from the device. Command and input data present on the SDA pin is always latched in on the rising edge of SCL, while output data on the SDA pin is clocked out on the falling edge of SCL. The SCL pin must either be forced high when the serial bus is idle or pulled high using an external pull-up resistor.

2.5 Write-Protect (WP)

The write-protect input, when connected to GND, allows normal write operations. When the WP pin is connected directly to V_{CC}, all write operations to the upper half of the memory array are inhibited.

If the pin is left floating, the WP pin will be internally pulled down to GND. However, due to capacitive coupling that may appear in customer applications, Microchip recommends always connecting the WP pin to a known state. When using a pull-up resistor, Microchip recommends using 10 kΩ or less.

Table 2-2. Write-Protect

WP Pin Status	Part of the Array Protected
At V_{CC}	Upper Half (2K) Array
At GND	Normal Write Operations

2.6 Device Power Supply

The V_{CC} pin is used to supply the source voltage to the device. Operations at invalid V_{CC} voltages may produce spurious results and should not be attempted.

Downloaded from Arrow.com.

3. Description

The AT24HC04B provides 4,096 bits of Serial Electrically Erasable and Programmable Read-Only Memory (EEPROM) organized as 512 words of 8 bits each. The device's cascading feature allows up to four devices to share a common two-wire bus. This device is optimized for use in many industrial and commercial applications where low-power and low-voltage operations are essential.
The device is available in space-saving 8-lead PDIP, 8-lead SOIC and 8-lead TSSOP packages.
All packages operate from 1.8V to 5.5V.

3.1 System Configuration Using Two-Wire Serial EEPROMs

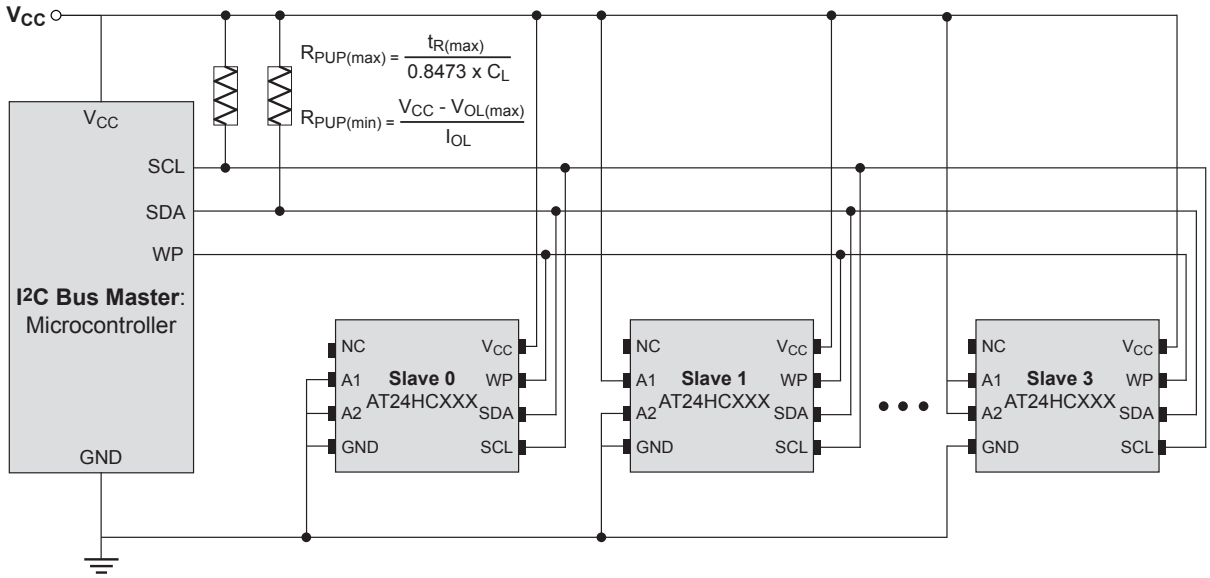

Downloaded from Arrow.com.

3.2 Block Diagram

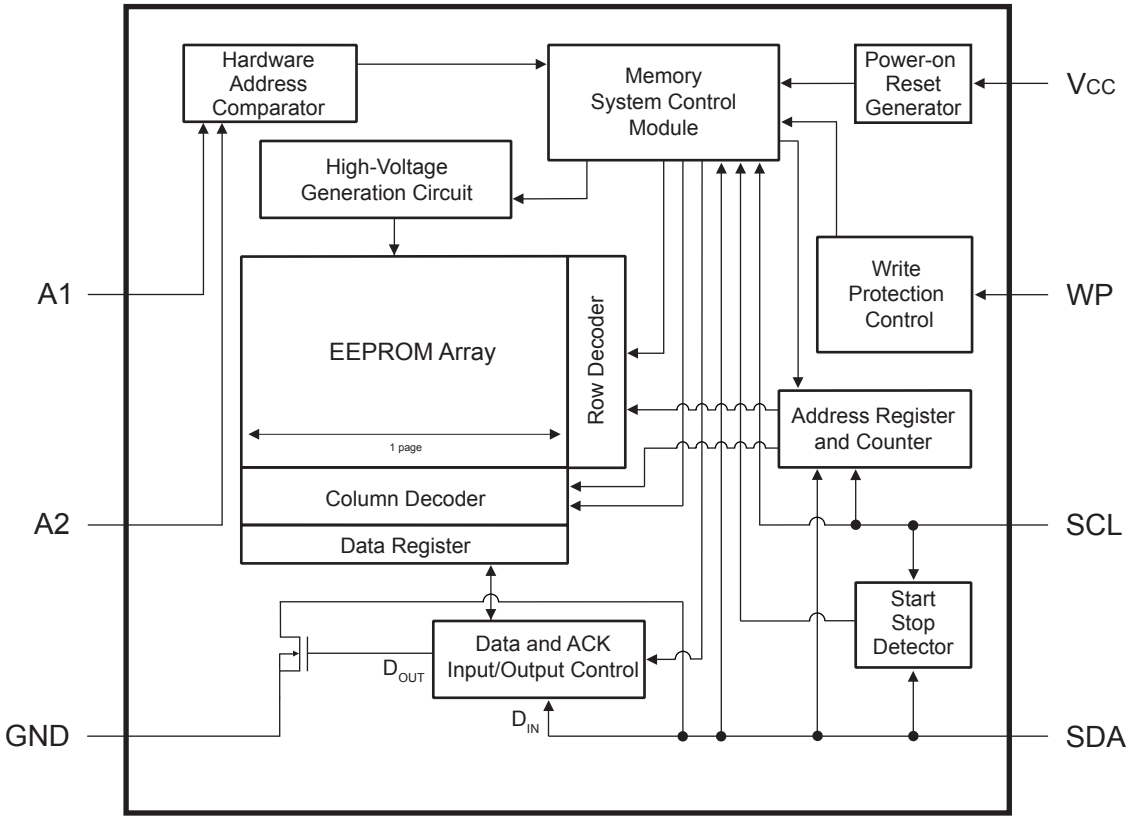

Downloaded from Arrow.com.

4. Electrical Characteristics

4.1 Absolute Maximum Ratings

Temperature under bias	-40°C to +125°C
Storage temperature	-65°C to +150°C
V_{CC}	6.25V
Voltage on any pin with respect to ground	-1.0V to +7.0V
DC output current	5.0 mA
ESD protection	>3 kV

Note: Stresses above those listed under “Absolute Maximum Ratings” may cause permanent damage to the device. This is a stress rating only and functional operation of the device at these or any other conditions above those indicated in the operation listings of this specification is not implied. Exposure to absolute maximum rating conditions for extended periods may affect device reliability.

4.2 DC and AC Operating Range

Table 4-1. DC and AC Operating Range

AT24HC04B		
Operating Temperature (Case)	Industrial Temperature Range	-40°C to +85°C
V_{CC} Power Supply	Low-Voltage Grade	1.8V to 5.5V

4.3 DC Characteristics

Table 4-2. DC Characteristics

Parameter	Symbol	Minimum	Typical(1)	Maximum	Units	Test Conditions
Supply Voltage	V_{CC}	1.8	—	5.5	V	—
Supply Current	I_{CC1}	—	0.40	1.0	mA	V_{CC} = 5.0V, Read at 100 kHz
Supply Current	I_{CC2}	—	2.0	3.0	mA	V_{CC} = 5.0V, Write at 100 kHz

Downloaded from Arrow.com.

.....continued

Parameter	Symbol	Minimum	Typical[1]	Maximum	Units	Test Conditions
Standby Current	I_{SB}	—	0.60	3.0	µA	V_{CC} = 1.8V, V_{IN} = V_{CC} or GND
		—	1.40	4.0	µA	V_{CC} = 2.5V, V_{IN} = V_{CC} or GND
		—	1.60	4.0	µA	V_{CC} = 2.7V, V_{IN} = V_{CC} or GND
		—	8.0	18.0	µA	V_{CC} = 5.0V, V_{IN} = V_{CC} or GND
Input Leakage Current	I_{LI}	—	0.10	3.0	µA	V_{IN} = V_{CC} or GND
Output Leakage Current	I_{LO}	—	0.05	3.0	µA	V_{OUT} = V_{CC} or GND
Input Low Level	V_{IL}	-0.6	—	V_{CC} x 0.3	V	Note 2
Input High Level	V_{IH}	V_{CC} x 0.7	—	V_{CC} + 0.5	V	Note 2
Output Low Level	V_{OL1}	—	—	0.2	V	V_{CC} = 1.8V, I_{OL} = 0.15 mA
Output Low Level	V_{OL2}	—	—	0.4	V	V_{CC} = 3.0V, I_{OL} = 2.1 mA

Note:

1. Typical values characterized at T_A = +25°C unless otherwise noted.
2. This parameter is characterized but is not 100% tested in production.

4.4 AC Characteristics

Table 4-3. AC Characteristics[1]

Parameter	Symbol	Fast Mode		Fast Mode Plus		Units
		V_{CC} = 1.7V to 2.5V		V_{CC} = 2.5V to 5.5V		
		Min.	Max.	Min.	Max.	
Clock Frequency, SCL	f_{SCL}	—	400	—	1000	kHz
Clock Pulse Width Low	t_{LOW}	1,200	—	500	—	ns
Clock Pulse Width High	t_{HIGH}	600	—	400	—	ns

Downloaded from Arrow.com.

.....continued

Parameter	Symbol	Fast Mode		Fast Mode Plus		Units
		V_{CC} = 1.7V to 2.5V		V_{CC} = 2.5V to 5.5V		
		Min.	Max.	Min.	Max.	
Input Filter Spike Suppression (SCL, SDA)	t_I	—	50	—	40	ns
Clock Low to Data Out Valid	t_{AA}	100	900	50	450	ns
Bus Free Time between Stop and Start	t_{BUF}	1,200	—	500	—	ns
Start Hold Time	$t_{HD.STA}$	600	—	250	—	ns
Start Set-Up Time	$t_{SU.STA}$	600	—	250	—	ns
Data In Hold Time	$t_{HD.DAT}$	0	—	0	—	ns
Data In Set-up Time	$t_{SU.DAT}$	100	—	100	—	ns
Inputs Rise Time(2)	t_R	—	300	—	300	ns
Inputs Fall Time(2)	t_F	—	300	—	100	ns
Stop Set-Up Time	$t_{SU.STO}$	600	—	250	—	ns
Data Out Hold Time	t_{DH}	50	—	50	—	ns
Write Cycle Time	t_{WR}	—	5	—	5	ms

Note:

1. AC measurement conditions:
   - C_L: 100 pF
   - R_{PUP} (SDA bus line pull-up resistor to V_{CC}): 1.3 kΩ (1000 kHz), 4 kΩ (400 kHz), 10 kΩ (100 kHz)
   - Input pulse voltages: 0.3 x V_{CC} to 0.7 x V_{CC}
   - Input rise and fall times: ≤50 ns
   - Input and output timing reference voltages: 0.5 x V_{CC}
2. These parameters are determined through product characterization and are not 100% tested in production.

Downloaded from Arrow.com.

Figure 4-1. Bus Timing

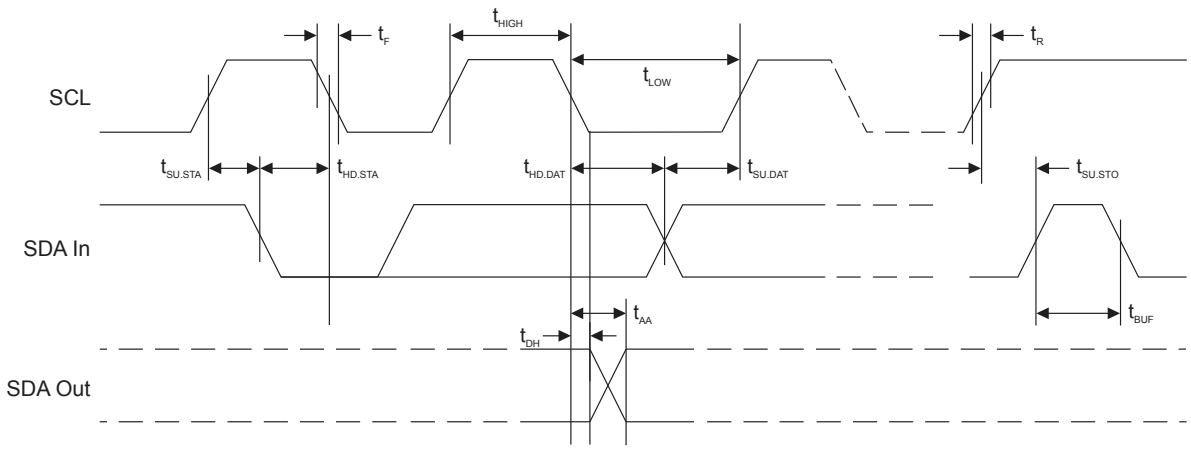

4.5 Electrical Specifications

4.5.1 Power-Up Requirements and Reset Behavior

During a power-up sequence, the V_{CC} supplied to the AT24HC04B should monotonically rise from GND to the minimum V_{CC} level, as specified in Table 4-1, with a slew rate no faster than 0.1 V/µs.

4.5.1.1 Device Reset

To prevent inadvertent write operations or any other spurious events from occurring during a power-up sequence, the AT24HC04B includes a Power-on Reset (POR) circuit. Upon power-up, the device will not respond to any commands until the V_{CC} level crosses the internal voltage threshold (V_{POR}) that brings the device out of Reset and into Standby mode.

The system designer must ensure the instructions are not sent to the device until the V_{CC} supply has reached a stable value greater than or equal to the minimum V_{CC} level. Additionally, once the V_{CC} is greater than or equal to the minimum V_{CC} level, the bus master must wait at least t_{PUP} before sending the first command to the device. See Table 4-4 for the values associated with these power-up parameters.

Table 4-4. Power-Up Conditions[(1)]

Symbol	Parameter	Min.	Max.	Units
t_{PUP}	Time required after V_{CC} is stable before the device can accept commands	100	—	µs
V_{POR}	Power-on Reset Threshold Voltage	—	1.5	V
t_{POFF}	Minimum time at V_{CC} = 0V between power cycles	500	—	ms

Note:

1. These parameters are characterized but they are not 100% tested in production.

If an event occurs in the system where the V_{CC} level supplied to the AT24HC04B drops below the maximum V_{POR} level specified, it is recommended that a full-power cycle sequence be performed by first driving the V_{CC} pin to GND, waiting at least the minimum t_{POFF} time and then performing a new power-up sequence in compliance with the requirements defined in this section.

Downloaded from Arrow.com.

4.5.2 Pin Capacitance

Table 4-5. Pin Capacitance[1]

Symbol	Test Condition	Max.	Units	Conditions
$C_{I/O}$	Input/Output Capacitance (SDA)	8	pF	$V_{I/O}$ = 0V
C_{IN}	Input Capacitance (A1, A2 and SCL)	6	pF	V_{IN} = 0V

Note:

1. This parameter is characterized but is not 100% tested in production.

4.5.3 EEPROM Cell Performance Characteristics

Table 4-6. EEPROM Cell Performance Characteristics

Operation	Test Condition	Min.	Max.	Units
Write Endurance[1]	T_A = 25°C, V_{CC} = 5.0V, Byte mode	1,000,000	—	Write Cycles
Data Retention[1]	T_A = 55°C	100	—	Years

Note:

1. Performance is determined through characterization and the qualification process.

Downloaded from Arrow.com.

5. Device Operation and Communication

The AT24HC04B operates as a slave device and utilizes a simple I^2C-compatible two-wire digital serial interface to communicate with a host controller, commonly referred to as the bus master. The master initiates and controls all read and write operations to the slave devices on the serial bus, and both the master and the slave devices can transmit and receive data on the bus.

The serial interface is comprised of just two signal lines: Serial Clock (SCL) and Serial Data (SDA). The SCL pin is used to receive the clock signal from the master, while the bidirectional SDA pin is used to receive command and data information from the master as well as to send data back to the master. Data is always latched into the AT24HC04B on the rising edge of SCL and always output from the device on the falling edge of SCL. Both the SCL and SDA pins incorporate integrated spike suppression filters and Schmitt Triggers to minimize the effects of input spikes and bus noise.

All command and data information is transferred with the Most Significant bit (MSb) first. During bus communication, one data bit is transmitted every clock cycle, and after eight bits (one byte) of data have been transferred, the receiving device must respond with either an Acknowledge (ACK) or a No-Acknowledge (NACK) response bit during a ninth clock cycle (ACK/NACK clock cycle) generated by the master. Therefore, nine clock cycles are required for every one byte of data transferred. There are no unused clock cycles during any read or write operation, so there must not be any interruptions or breaks in the data stream during each data byte transfer and ACK or NACK clock cycle.

During data transfers, data on the SDA pin must only change while SCL is low, and the data must remain stable while SCL is high. If data on the SDA pin changes while SCL is high, then either a Start or a Stop condition will occur. Start and Stop conditions are used to initiate and end all serial bus communication between the master and the slave devices. The number of data bytes transferred between a Start and a Stop condition is not limited and is determined by the master. In order for the serial bus to be idle, both the SCL and SDA pins must be in the logic-high state at the same time.

5.1 Clock and Data Transition Requirements

The SDA pin is an open-drain terminal and therefore must be pulled high with an external pull-up resistor. SCL is an input pin that can either be driven high or pulled high using an external pull-up resistor. Data on the SDA pin may change only during SCL low time periods. Data changes during SCL high periods will indicate a Start or Stop condition as defined below. The relationship of the AC timing parameters with respect to SCL and SDA for the AT24HC04B is shown in the timing waveform in Figure 4-1.
The AC timing characteristics and specifications are outlined in AC Characteristics.

5.2 Start and Stop Conditions

5.2.1 Start Condition

A Start condition occurs when there is a high-to-low transition on the SDA pin while the SCL pin is at a stable logic '1' state and will bring the device out of Standby mode. The master uses a Start condition to initiate any data transfer sequence; therefore, every command must begin with a Start condition.
The device will continuously monitor the SDA and SCL pins for a Start condition but will not respond unless one is detected. Refer to Figure 5-1 for more details.

5.2.2 Stop Condition

A Stop condition occurs when there is a low-to-high transition on the SDA pin while the SCL pin is stable in the logic '1' state.

Downloaded from Arrow.com.

The master can use the Stop condition to end a data transfer sequence with the AT24HC04B, which will subsequently return to Standby mode. The master can also utilize a repeated Start condition instead of a Stop condition to end the current data transfer if the master will perform another operation. Refer to Figure 5-1 for more details.

5.3 Acknowledge and No-Acknowledge

After every byte of data is received, the receiving device must confirm to the transmitting device that it has successfully received the data byte by responding with what is known as an Acknowledge (ACK). An ACK is accomplished by the transmitting device first releasing the SDA line at the falling edge of the eighth clock cycle followed by the receiving device responding with a logic '0' during the entire high period of the ninth clock cycle.

When the AT24HC04B is transmitting data to the master, the master can indicate that it is done receiving data and wants to end the operation by sending a logic '1' response to the AT24HC04B instead of an ACK response during the ninth clock cycle. This is known as a No-Acknowledge (NACK) and is accomplished by the master sending a logic '1' during the ninth clock cycle, at which point the AT24HC04B will release the SDA line so the master can then generate a Stop condition.

The transmitting device, which can be the bus master or the Serial EEPROM, must release the SDA line at the falling edge of the eighth clock cycle to allow the receiving device to drive the SDA line to a logic '0' to ACK the previous 8-bit word. The receiving device must release the SDA line at the end of the ninth clock cycle to allow the transmitter to continue sending new data. A timing diagram has been provided in Figure 5-1 to better illustrate these requirements.

Figure 5-1. Start Condition, Data Transitions, Stop Condition and Acknowledge

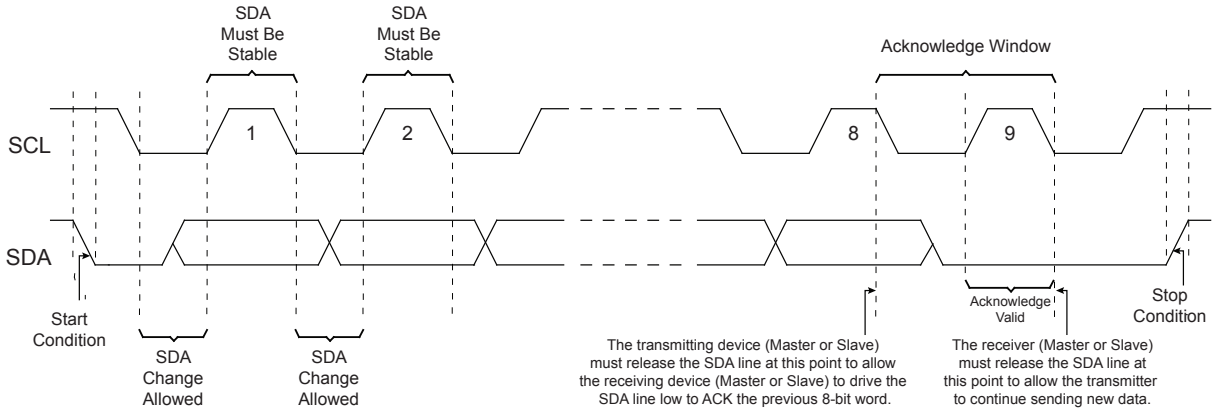

5.4 Standby Mode

The AT24HC04B features a low-power Standby mode that is enabled when any one of the following occurs:

- A valid power-up sequence is performed (see Power-Up Requirements and Reset Behavior).
- A Stop condition is received by the device unless it initiates an internal write cycle (see Write Operations).
- At the completion of an internal write cycle (see Write Operations).

Downloaded from Arrow.com.

5.5 Software Reset

After an interruption in protocol, power loss or system Reset, any two-wire device can be protocol reset by clocking SCL until SDA is released by the EEPROM and goes high. The number of clock cycles until SDA is released by the EEPROM will vary. The software Reset sequence should not take more than nine dummy clock cycles. Once the software Reset sequence is complete, new protocol can be sent to the device by sending a Start condition followed by the protocol. Refer to Figure 5-2 for an illustration.

Figure 5-2. Software Reset

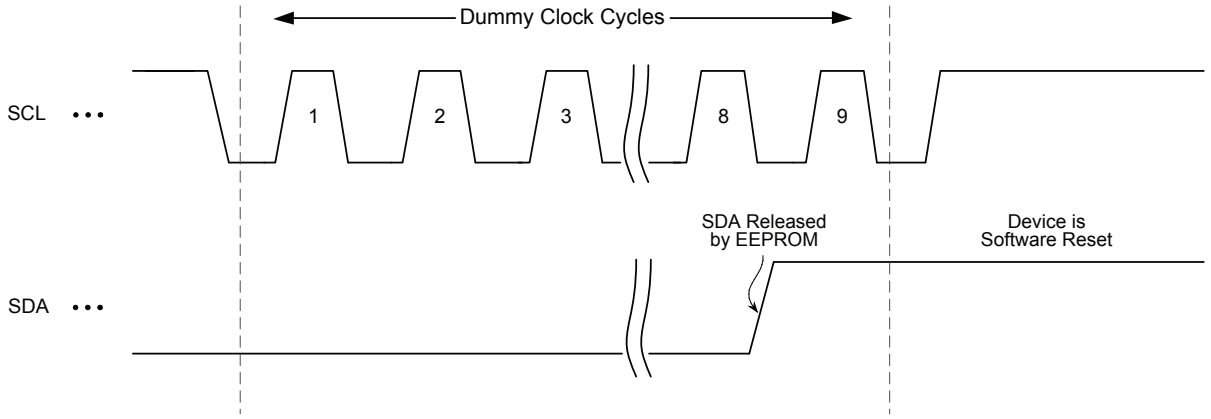

In the event that the device is still non-responsive or remains active on the SDA bus, a power cycle must be used to reset the device (see Power-Up Requirements and Reset Behavior).

Downloaded from Arrow.com.

6. Memory Organization

The AT24HC04B is internally organized as 32 pages of 16 bytes each.

6.1 Device Addressing

Accessing the device requires an 8-bit device address byte following a Start condition to enable the device for a read or write operation. Since multiple slave devices can reside on the serial bus, each slave device must have its own unique address so the master can access each device independently.

The Most Significant four bits of the device address byte is referred to as the device type identifier. The device type identifier '1010' (Ah) is required in bits 7 through 4 of the device address byte (see Table 6-1).

Following the 4-bit device type identifier are the hardware slave address bits, A2 and A1. These bits can be used to expand the address space by allowing up to four Serial EEPROM devices on the same bus. These hardware slave address bits must correlate with the voltage level on the corresponding hardwired device address input pins A1 and A2. The A1 and A2 pins use an internal proprietary circuit that automatically biases it to a logic '0' state if the pin is allowed to float. In order to operate in a wide variety of application environments, the pull-down mechanism is intentionally designed to be somewhat strong. Once these pins are biased above the CMOS input buffert's trip point (~0.5 x V_{CC}), the pull-down mechanism disengages. Microchip recommends connecting the A1 and A2 pins to a known state whenever possible.

Following the A2 and A1 hardware slave address bits is bit A8 (bit 1 of the device address byte), which is the Most Significant bit of the memory array word address. Refer to Table 6-1 to review the bit position.

The eighth bit (bit 0) of the device address byte is the Read/Write Select bit. A read operation is initiated if this bit is high and a write operation is initiated if this bit is low.

Upon the successful comparison of the device address byte, the AT24HC04B will return an ACK. If a valid comparison is not made, the device will NACK.

Table 6-1. Device Address Byte

Package	Device Type Identifier				Hardware Slave Address Bits		Most Significant Bit of the Word Address	R/$\overline{W}$ Select
	Bit 7	Bit 6	Bit 5	Bit 4	Bit 3	Bit 2	Bit 1	Bit 0
PDIP, SOIC, TSSOP	1	0	1	0	A2	A1	A8	R/$\overline{W}$

For all operations except the current address read, a word address byte must be transmitted to the device immediately following the device address byte. The word address byte consists of the remaining eight bits of the 9-bit memory array word address, and is used to specify which byte location in the EEPROM to start reading or writing. Refer to Table 6-2 to review these bit positions.

Downloaded from Arrow.com.

Table 6-2. Word Address Byte

Bit 7	Bit 6	Bit 5	Bit 4	Bit 3	Bit 2	Bit 1	Bit 0
A7	A6	A5	A4	A3	A2	A1	A0

Downloaded from Arrow.com.

7. Write Operations

All write operations for the AT24HC04B begin with the master sending a Start condition, followed by a device address byte with the R/$\overline{W}$ bit set to logic '0', and then by the word address byte. The data value(s) to be written to the device immediately follow the word address byte.

7.1 Byte Write

The AT24HC04B supports the writing of a single 8-bit byte. Selecting a data word in the AT24HC04B requires a 9-bit word address.

Upon receipt of the proper device address and the word address bytes, the EEPROM will send an Acknowledge. The device will then be ready to receive the 8-bit data word. Following receipt of the 8-bit data word, the EEPROM will respond with an ACK. The addressing device, such as a bus master, must then terminate the write operation with a Stop condition. At that time, the EEPROM will enter an internally self-timed write cycle, which will be completed within t_{WR}, while the data word is being programmed into the nonvolatile EEPROM. All inputs are disabled during this write cycle, and the EEPROM will not respond until the write is complete.

Figure 7-1. Byte Write

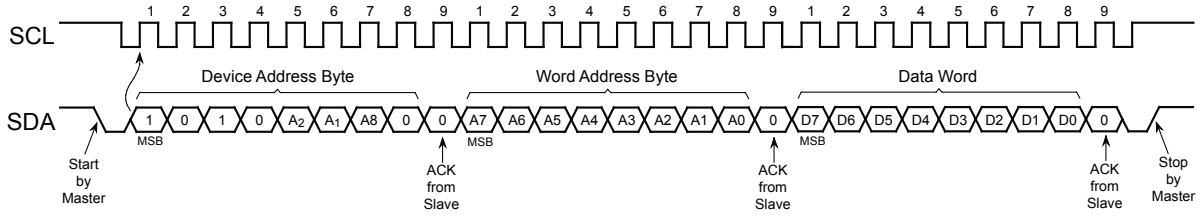

7.2 Page Write

A page write operation allows up to 16 bytes to be written in the same write cycle, provided all bytes are in the same row of the memory array (where address bits A8 through A4 are the same). Partial page writes of less than 16 bytes are also allowed.

A page write is initiated the same way as a byte write, but the bus master does not send a Stop condition after the first data word is clocked in. Instead, after the EEPROM acknowledges receipt of the first data word, the bus master can transmit up to fifteen additional data words. The EEPROM will respond with an ACK after each data word is received. Once all data to be written has been sent to the device, the bus master must issue a Stop condition (see Figure 7-2) at which time the internally self-timed write cycle will begin.

The lower four bits of the word address are internally incremented following the receipt of each data word. The higher order address bits are not incremented and retain the memory page row location. Page write operations are limited to writing bytes within a single physical page, regardless of the number of bytes actually being written. When the incremented word address reaches the page boundary, the address counter will roll-over to the beginning of the same page. Nevertheless, creating a roll-over event should be avoided as previously loaded data in the page could become unintentionally altered.

Downloaded from Arrow.com.

Figure 7-2. Page Write

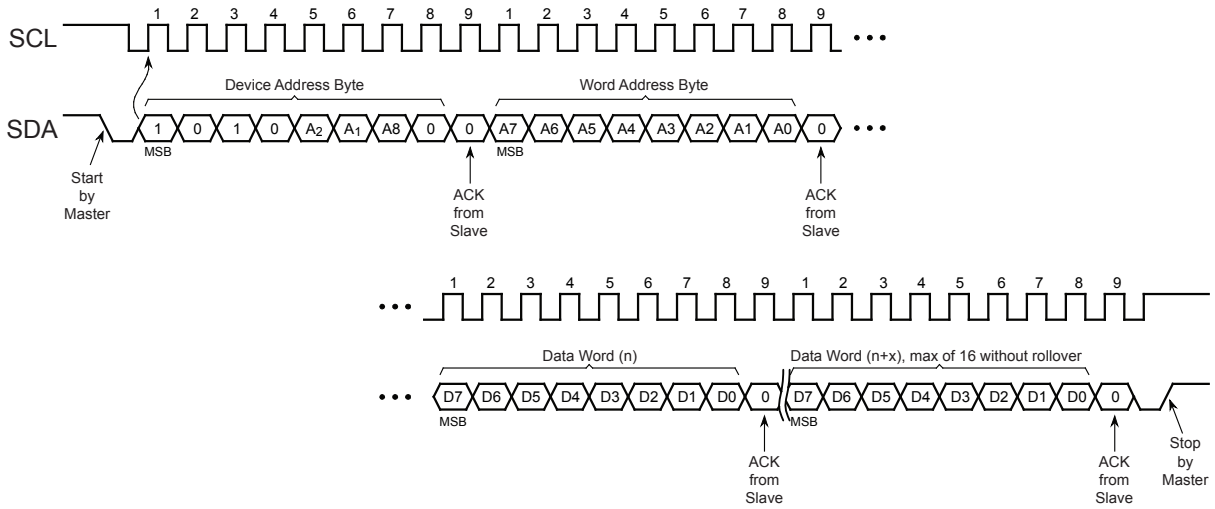

7.3 Acknowledge Polling

An Acknowledge Polling routine can be implemented to optimize time-sensitive applications that would prefer not to wait the fixed maximum write cycle time (t_{WR}). This method allows the application to know immediately when the Serial EEPROM write cycle has completed, so a subsequent operation can be started.

Once the internally self-timed write cycle has started, an Acknowledge Polling routine can be initiated. This involves repeatedly sending a Start condition followed by a valid device address byte with the R/$\overline{W}$ bit set at logic '0'. The device will not respond with an ACK while the write cycle is ongoing. Once the internal write cycle has completed, the EEPROM will respond with an ACK, allowing a new read or write operation to be immediately initiated. A flowchart has been included below in Figure 7-3 to better illustrate this technique.

Figure 7-3. Acknowledge Polling Flowchart

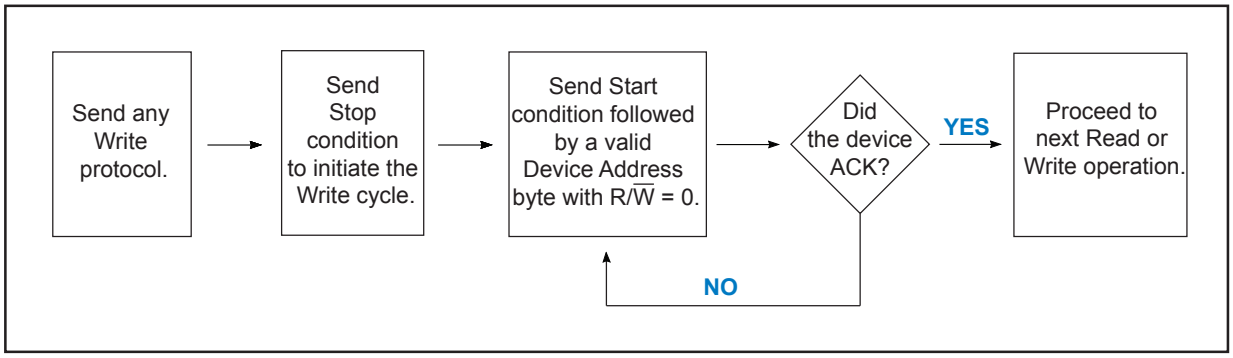

Downloaded from Arrow.com.

7.4 Write Cycle Timing

The length of the self-timed write cycle (t_{WR}) is defined as the amount of time from the Stop condition that begins the internal write cycle to the Start condition of the first device address byte sent to the AT24HC04B that it subsequently responds to with an ACK. Figure 7-4 has been included to show this measurement. During the internally self-timed write cycle, any attempts to read from or write to the memory array will not be processed.

Figure 7-4. Write Cycle Timing

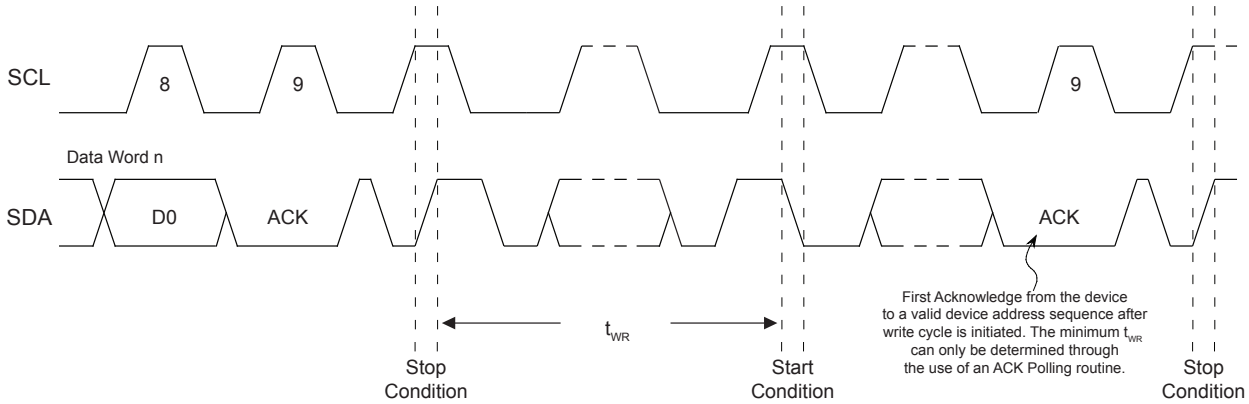

7.5 Write Protection

The AT24HC04B utilizes a hardware data protection scheme that allows the user to write-protect the upper half (2K) memory array contents when the WP pin is at V_{CC} (or a valid V_{IH}). No write protection will be set if the WP pin is at GND or left floating.

Table 7-1. AT24HC04B Write-Protect Behavior

WP Pin Voltage	Part of the Array Protected
V_{CC}	Upper Half (2K) Array
GND	None — Write Protection Not Enabled

The status of the WP pin is sampled at the Stop condition for every byte write or page write operation prior to the start of an internally self-timed write cycle. Changing the WP pin state after the Stop condition has been sent will not alter or interrupt the execution of the write cycle.

If an attempt is made to write to the upper half of the memory array while the WP pin has been asserted, the device will acknowledge the device address, word address and data bytes, but no write cycle will occur when the Stop condition is issued. The device will immediately be ready to accept a new read or write command.

Downloaded from Arrow.com.

8. Read Operations

Read operations are initiated the same way as write operations with the exception that the Read/Write Select bit in the device address byte must be a logic '1'. There are three read operations:

- Current Address Read
- Random Address Read
- Sequential Read

8.1 Current Address Read

The internal data word address counter maintains the last address accessed during the last read or write operation, incremented by one. This address stays valid between operations as long as the V_{CC} is maintained to the part. The address roll-over during a read is from the last byte of the last page to the first byte of the first page of the memory.

A current address read operation will output data according to the location of the internal data word address counter. This is initiated with a Start condition, followed by a valid device address byte with the R/$\overline{W}$ bit set to logic '1'. The device will ACK this sequence and the current address data word is serially clocked out on the SDA line. All types of read operations will be terminated if the bus master does not respond with an ACK (it NACKs) during the ninth clock cycle. After the NACK response, the master may send a Stop condition to complete the protocol, or it can send a Start condition to begin the next sequence.

Figure 8-1. Current Address Read

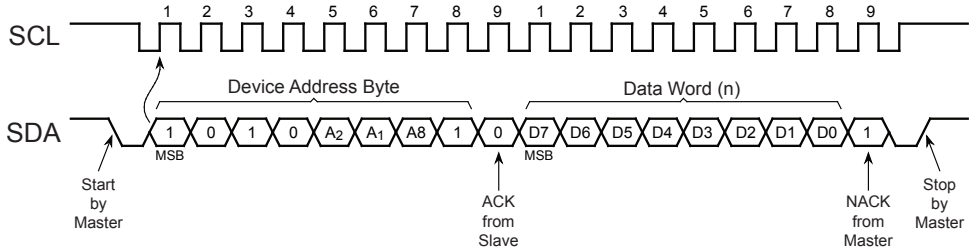

8.2 Random Read

A random read begins in the same way as a byte write operation does to load in a new data word address. This is known as a "dummy write" sequence; however, the data byte and the Stop condition of the byte write must be omitted to prevent the part from entering an internal write cycle. Once the device address and word address are clocked in and acknowledged by the EEPROM, the bus master must generate another Start condition. The bus master now initiates a current address read by sending a Start condition, followed by a valid device address byte with the R/$\overline{W}$ bit set to logic '1'. In this second device address byte, the bit position usually reserved for the Most Significant bit of the word address (bit 1) is a "don't care" bit since the address that will be read from is determined only by what was sent in the dummy write portion of the sequence. The EEPROM will ACK the device address and serially clock out the data word on the SDA line. All types of read operations will be terminated if the bus master does not respond with an ACK (it NACKs) during the ninth clock cycle. After the NACK response, the master may send a Stop condition to complete the protocol, or it can send a Start condition to begin the next sequence.

Downloaded from Arrow.com.

Figure 8-2. Random Read

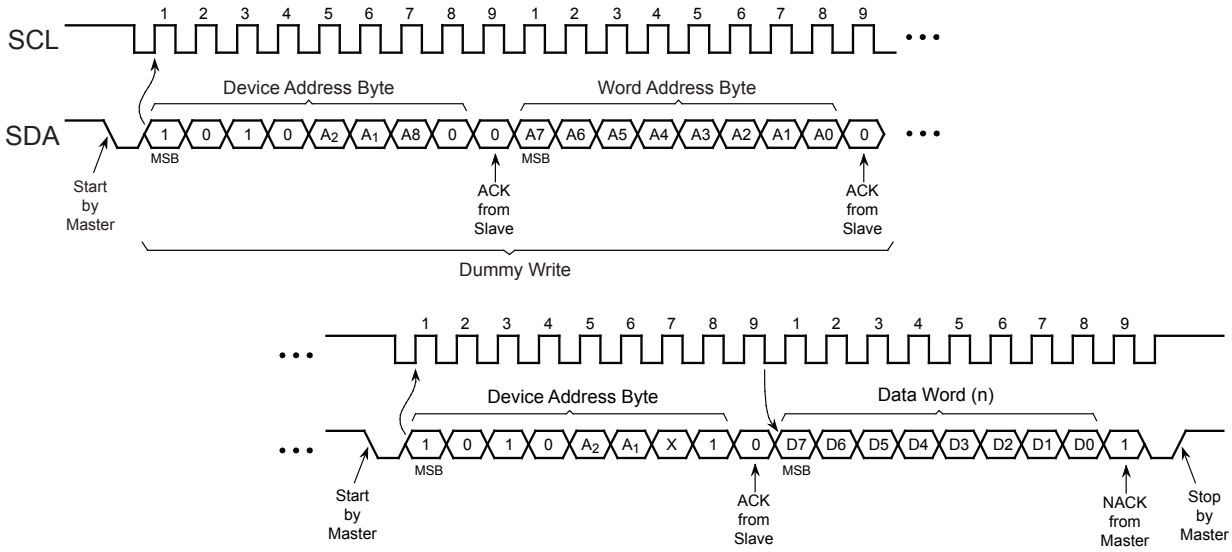

8.3 Sequential Read

Sequential reads are initiated by either a current address read or a random read. After the bus master receives a data word, it responds with an Acknowledge. As long as the EEPROM receives an ACK, it will continue to increment the word address and serially clock out sequential data words. When the maximum memory address is reached, the data word address will roll-over and the sequential read will continue from the beginning of the memory array. All types of read operations will be terminated if the bus master does not respond with an ACK (it NACKs) during the ninth clock cycle. After the NACK response, the master may send a Stop condition to complete the protocol, or it can send a Start condition to begin the next sequence.

Figure 8-3. Sequential Read

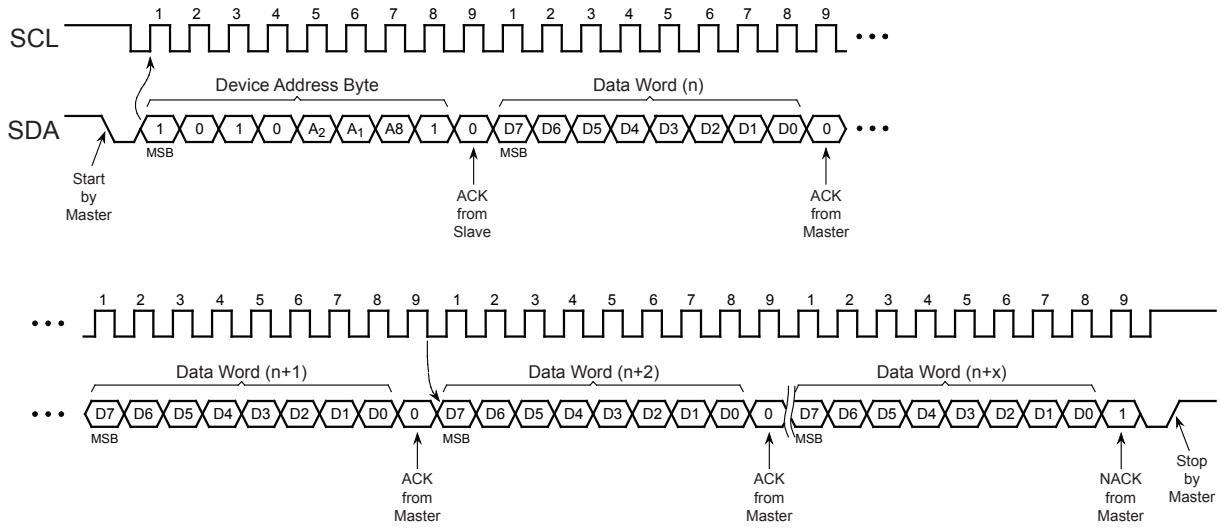

Downloaded from Arrow.com.

9. Device Default Condition from Microchip

The AT24HC04B is delivered with the EEPROM array set to logic '1', resulting in FFh data in all locations.

Downloaded from Arrow.com.

10. Packaging Information

10.1 Package Marking Information

AT24HC04B: Package Marking Information

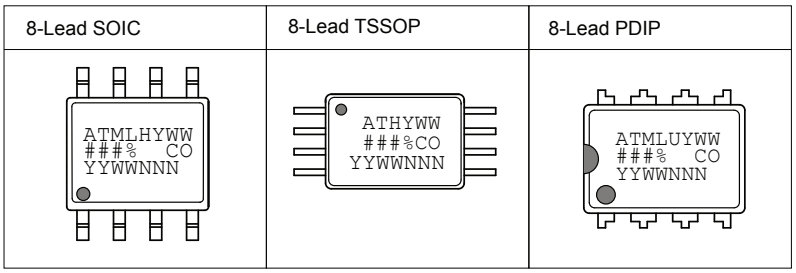

Note 1: ● designates pin 1
Note 2: Package drawings are not to scale

Catalog Number Truncation					
AT24HC04B		Truncation Code ###: H4B			
Date Codes					**Voltages**
YY = Year		Y = Year		WW = Work Week of Assembly	% = Minimum Voltage
16: 2016	20: 2020	6: 2016	0: 2020	02: Week 2	L: 1.8V min
17: 2017	21: 2021	7: 2017	1: 2021	04: Week 4	
18: 2018	22: 2022	8: 2018	2: 2022	...	
19: 2019	23: 2023	9: 2019	3: 2023	52: Week 52	

Country of Origin	Device Grade	Atmel Truncation
CO = Country of Origin	H or U: Industrial Grade	AT: Atmel ATM: Atmel ATML: Atmel

Trace Code
NNN = Alphanumeric Trace Code (2 Characters for Small Packages)

Downloaded from Arrow.com.

8-Lead Plastic Dual In-Line (P) - 300 mil Body [PDIP]

Note: For the most current package drawings, please see the Microchip Packaging Specification located at http://www.microchip.com/packaging

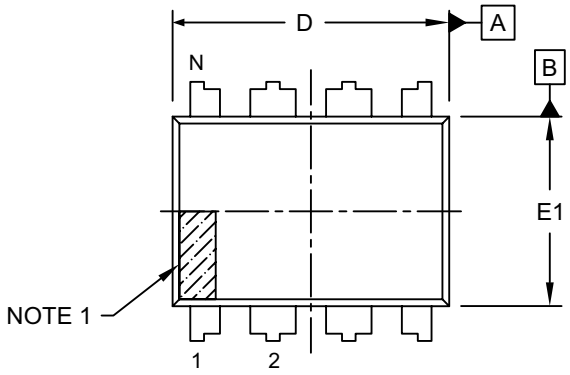

TOP VIEW

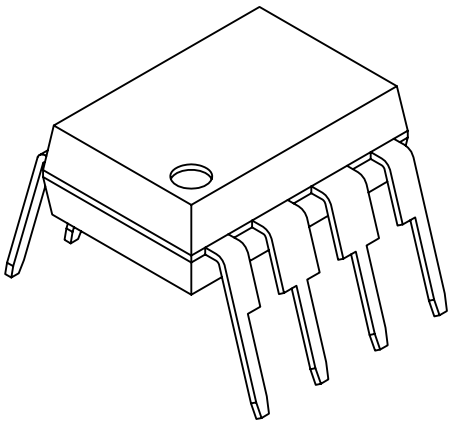

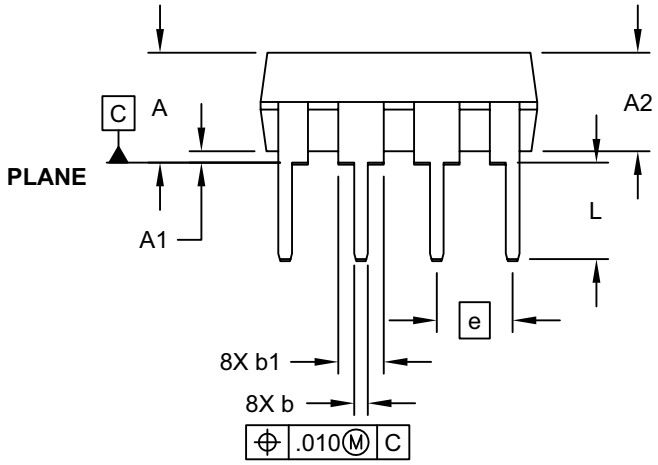

SIDE VIEW

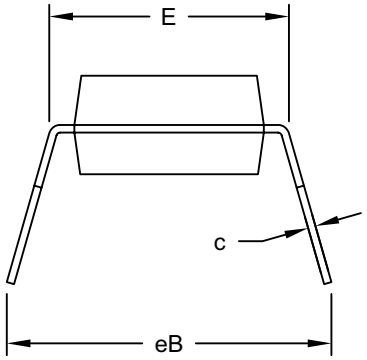

END VIEW

Microchip Technology Drawing No. C04-018D Sheet 1 of 2

Downloaded from Arrow.com.

8-Lead Plastic Dual In-Line (P) - 300 mil Body [PDIP]

Note: For the most current package drawings, please see the Microchip Packaging Specification located at http://www.microchip.com/packaging

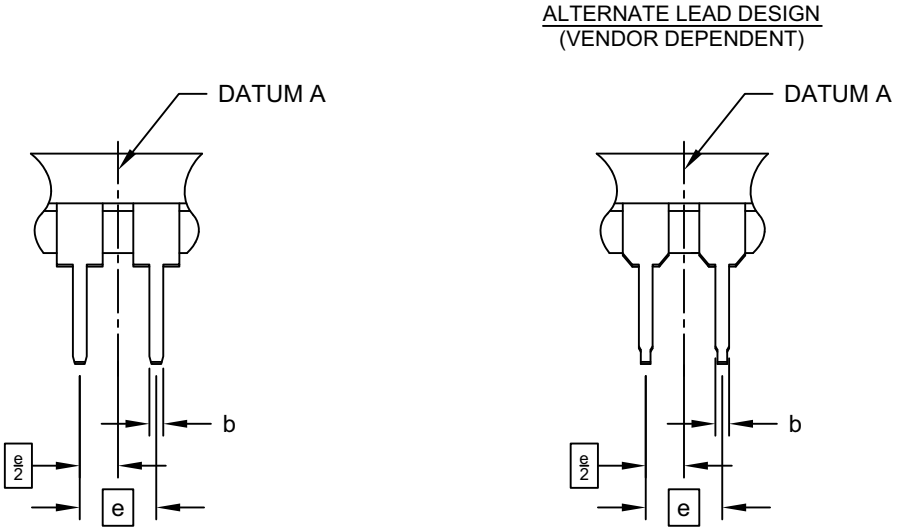

Units		INCHES		
Dimension Limits		MIN	NOM	MAX
Number of Pins	N	8		
Pitch	e	.100 BSC		
Top to Seating Plane	A	-	-	.210
Molded Package Thickness	A2	.115	.130	.195
Base to Seating Plane	A1	.015	-	-
Shoulder to Shoulder Width	E	.290	.310	.325
Molded Package Width	E1	.240	.250	.280
Overall Length	D	.348	.365	.400
Tip to Seating Plane	L	.115	.130	.150
Lead Thickness	c	.008	.010	.015
Upper Lead Width	b1	.040	.060	.070
Lower Lead Width	b	.014	.018	.022
Overall Row Spacing §	eB	-	-	.430

Notes:

1. Pin 1 visual index feature may vary, but must be located within the hatched area.
2. § Significant Characteristic
3. Dimensions D and E1 do not include mold flash or protrusions. Mold flash or protrusions shall not exceed .010" per side.
4. Dimensioning and tolerancing per ASME Y14.5M

   BSC: Basic Dimension. Theoretically exact value shown without tolerances.

Microchip Technology Drawing No. C04-018D Sheet 2 of 2

Downloaded from Arrow.com.

8-Lead Plastic Small Outline (SN) - Narrow, 3.90 mm (.150 In.) Body [SOIC]

Note: For the most current package drawings, please see the Microchip Packaging Specification located at http://www.microchip.com/packaging

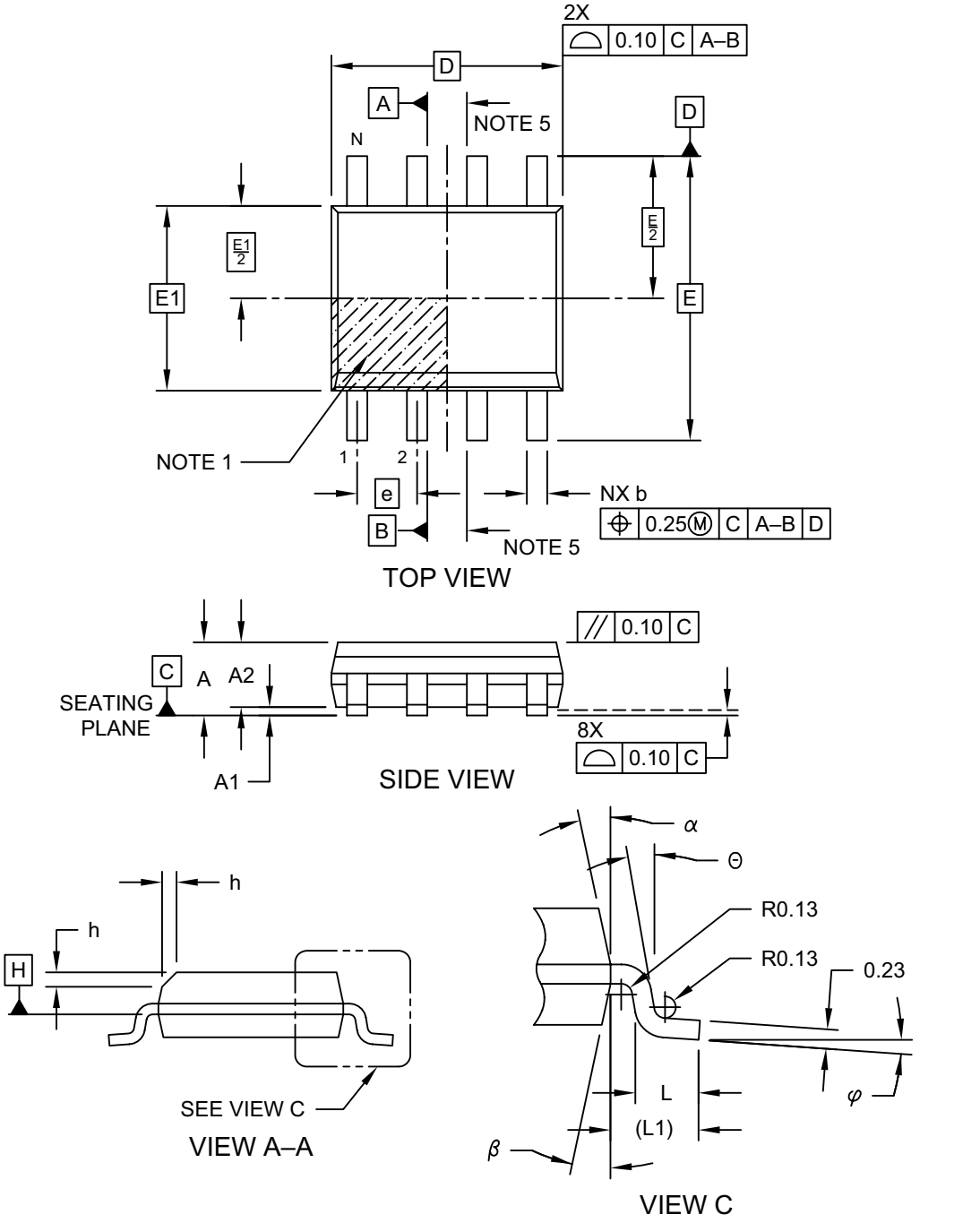

Microchip Technology Drawing No. C04-057-SN Rev D Sheet 1 of 2

Downloaded from Arrow.com.

8-Lead Plastic Small Outline (SN) - Narrow, 3.90 mm (.150 In.) Body [SOIC]

Note: For the most current package drawings, please see the Microchip Packaging Specification located at http://www.microchip.com/packaging

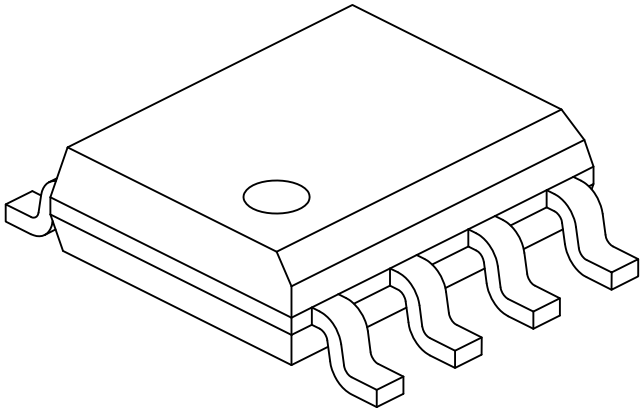

Units		MILLIMETERS		
Dimension Limits		MIN	NOM	MAX
Number of Pins	N	8		
Pitch	e	1.27 BSC		
Overall Height	A	-	-	1.75
Molded Package Thickness	A2	1.25	-	-
Standoff §	A1	0.10	-	0.25
Overall Width	E	6.00 BSC		
Molded Package Width	E1	3.90 BSC		
Overall Length	D	4.90 BSC		
Chamfer (Optional)	h	0.25	-	0.50
Foot Length	L	0.40	-	1.27
Footprint	L1	1.04 REF		
Foot Angle	φ	0°	-	8°
Lead Thickness	c	0.17	-	0.25
Lead Width	b	0.31	-	0.51
Mold Draft Angle Top	α	5°	-	15°
Mold Draft Angle Bottom	β	5°	-	15°

Notes:

1. Pin 1 visual index feature may vary, but must be located within the hatched area.
2. § Significant Characteristic
3. Dimensions D and E1 do not include mold flash or protrusions. Mold flash or protrusions shall not exceed 0.15mm per side.
4. Dimensioning and tolerancing per ASME Y14.5M
   BSC: Basic Dimension. Theoretically exact value shown without tolerances.
   REF: Reference Dimension, usually without tolerance, for information purposes only.
5. Datums A & B to be determined at Datum H.

Microchip Technology Drawing No. C04-057-SN Rev D Sheet 2 of 2

Downloaded from Arrow.com.

8-Lead Plastic Small Outline (SN) - Narrow, 3.90 mm Body [SOIC]

Note: For the most current package drawings, please see the Microchip Packaging Specification located at http://www.microchip.com/packaging

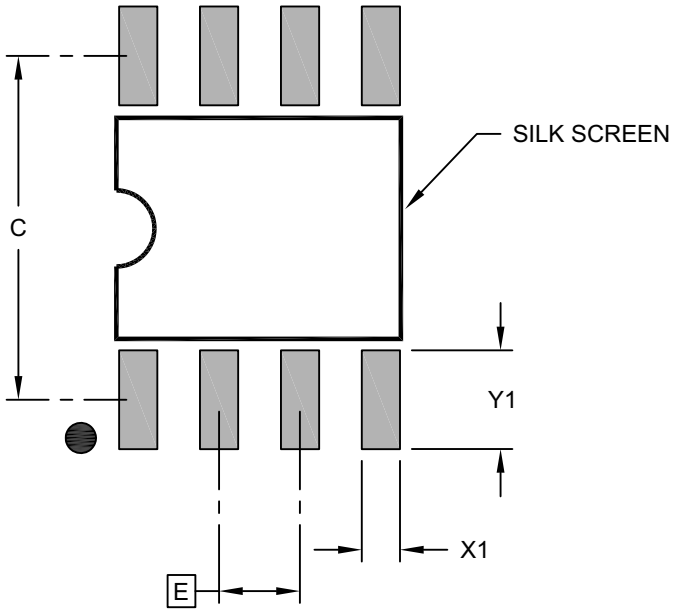

RECOMMENDED LAND PATTERN

Units		MILLIMETERS		
Dimension Limits		MIN	NOM	MAX
Contact Pitch	E	1.27 BSC		
Contact Pad Spacing	C		5.40	
Contact Pad Width (X8)	X1			0.60
Contact Pad Length (X8)	Y1			1.55

Notes:

1. Dimensioning and tolerancing per ASME Y14.5M
   BSC: Basic Dimension. Theoretically exact value shown without tolerances.

Microchip Technology Drawing C04-2057-SN Rev B

Downloaded from Arrow.com.

8-Lead Plastic Thin Shrink Small Outline (ST) – 4.4 mm Body [TSSOP]

Note: For the most current package drawings, please see the Microchip Packaging Specification located at http://www.microchip.com/packaging

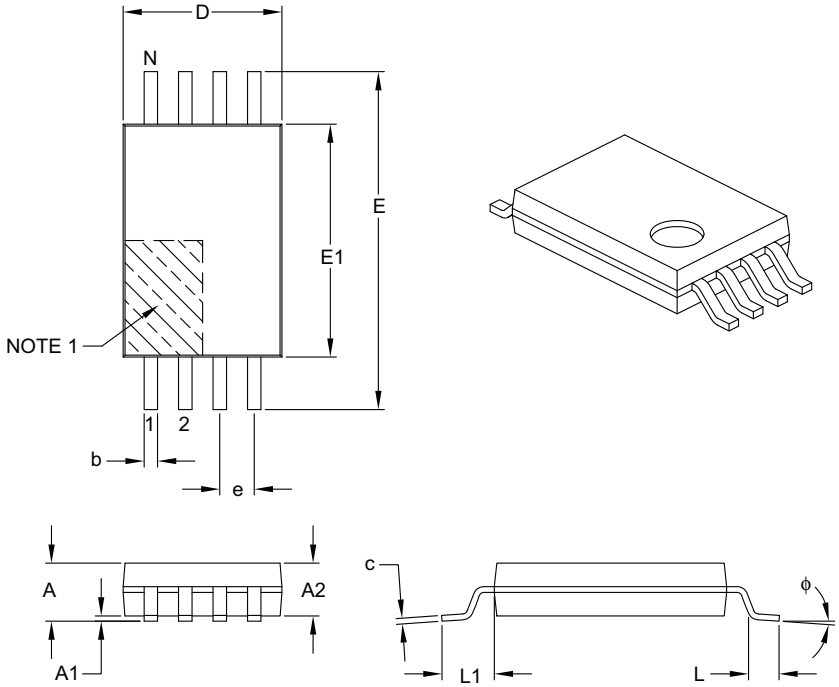

Units		MILLIMETERS		
Dimension Limits		MIN	NOM	MAX
Number of Pins	N	8		
Pitch	e	0.65 BSC		
Overall Height	A	–	–	1.20
Molded Package Thickness	A2	0.80	1.00	1.05
Standoff	A1	0.05	–	0.15
Overall Width	E	6.40 BSC		
Molded Package Width	E1	4.30	4.40	4.50
Molded Package Length	D	2.90	3.00	3.10
Foot Length	L	0.45	0.60	0.75
Footprint	L1	1.00 REF		
Foot Angle	ϕ	0°	–	8°
Lead Thickness	c	0.09	–	0.20
Lead Width	b	0.19	–	0.30

Notes:

1. Pin 1 visual index feature may vary, but must be located within the hatched area.
2. Dimensions D and E1 do not include mold flash or protrusions. Mold flash or protrusions shall not exceed 0.15 mm per side.
3. Dimensioning and tolerancing per ASME Y14.5M.
   BSC: Basic Dimension. Theoretically exact value shown without tolerances.
   REF: Reference Dimension, usually without tolerance, for information purposes only.

Microchip Technology Drawing C04-086B

Downloaded from Arrow.com.

8-Lead Plastic Thin Shrink Small Outline (ST) - 4.4 mm Body [TSSOP]

Note: For the most current package drawings, please see the Microchip Packaging Specification located at http://www.microchip.com/packaging

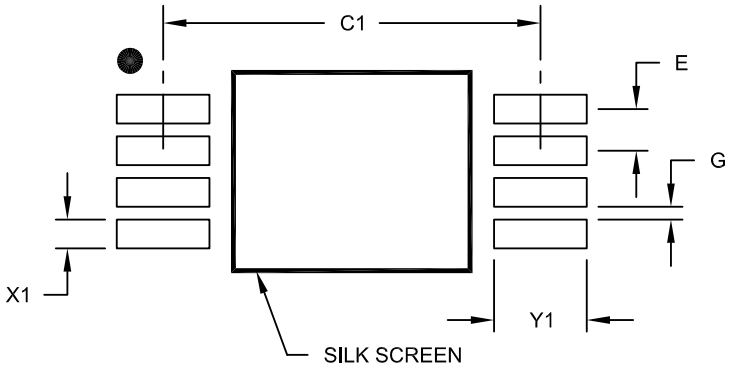

RECOMMENDED LAND PATTERN

Units		MILLIMETERS		
Dimension Limits		MIN	NOM	MAX
Contact Pitch	E	0.65 BSC		
Contact Pad Spacing	C1		5.90	
Contact Pad Width (X8)	X1			0.45
Contact Pad Length (X8)	Y1			1.45
Distance Between Pads	G	0.20		

Notes:

1. Dimensioning and tolerancing per ASME Y14.5M
   BSC: Basic Dimension. Theoretically exact value shown without tolerances.

Microchip Technology Drawing No. C04-2086A

Downloaded from Arrow.com.

11. Revision History

Revision A (February 2019)
Updated to the Microchip template. Microchip DS20006150 replaces Atmel document 5227. Corrected t_{LOW} typo from 400 ns to 500 ns. Corrected t_{AA} typo from 550 ns to 450 ns. Updated Part Marking Information. Updated the "Software Reset" section. Added ESD rating. Removed lead finish designation. Updated trace code format in package markings. Added a figure for “System Configuration Using Two-Wire Serial EEPROMs”. Updated "Block Diagram" figure. Updated section content throughout for clarification. Updated the PDIP, SOIC and TSSOP package drawings to Microchip format.

Atmel Document 5227 Revision H (December 2015)
Corrected the ordering code detail.

Atmel Document 5227 Revision G (June 2015)
Updated package drawings, ordering code table, and part marking page. Added the ordering code detail.

Atmel Document 5227 Revision F (February 2014)
Updated Atmel template (no changes to functional specification), logos and disclaimer page, part markings to a single page, and package drawings 8P3, 8S1, and 8A2 to 8X. Updated the Random Read figure and added the AC measurement conditions note to the AC Characteristics table.

Atmel Document 5227 Revision E (November 2008)
Updated pin configurations.

Atmel Document 5227 Revision D (November 2008)
Removed ‘Preliminary’ status.

Atmel Document 5227 Revision C (January 2008)
Added Part Marking Scheme.

Atmel Document 5227 Revision B (August 2007)
Updated to new template and common figures. Added Part Marking tables.

Atmel Document 5227 Revision A (April 2007)
Initial release of this document.

Downloaded from Arrow.com.

The Microchip Web Site

Microchip provides online support via our web site at http://www.microchip.com/. This web site is used as a means to make files and information easily available to customers. Accessible by using your favorite Internet browser, the web site contains the following information:

- **Product Support** – Data sheets and errata, application notes and sample programs, design resources, user's guides and hardware support documents, latest software releases and archived software
- **General Technical Support** – Frequently Asked Questions (FAQ), technical support requests, online discussion groups, Microchip consultant program member listing
- **Business of Microchip** – Product selector and ordering guides, latest Microchip press releases, listing of seminars and events, listings of Microchip sales offices, distributors and factory representatives

Customer Change Notification Service

Microchip's customer notification service helps keep customers current on Microchip products. Subscribers will receive e-mail notification whenever there are changes, updates, revisions or errata related to a specified product family or development tool of interest.

To register, access the Microchip web site at http://www.microchip.com/. Under "Support", click on "Customer Change Notification" and follow the registration instructions.

Customer Support

Users of Microchip products can receive assistance through several channels:

- Distributor or Representative
- Local Sales Office
- Field Application Engineer (FAE)
- Technical Support

Customers should contact their distributor, representative or Field Application Engineer (FAE) for support. Local sales offices are also available to help customers. A listing of sales offices and locations is included in the back of this document.

Technical support is available through the web site at: http://www.microchip.com/support

Downloaded from Arrow.com.

Product Identification System

To order or obtain information, e.g., on pricing or delivery, refer to the factory or the listed sales office.

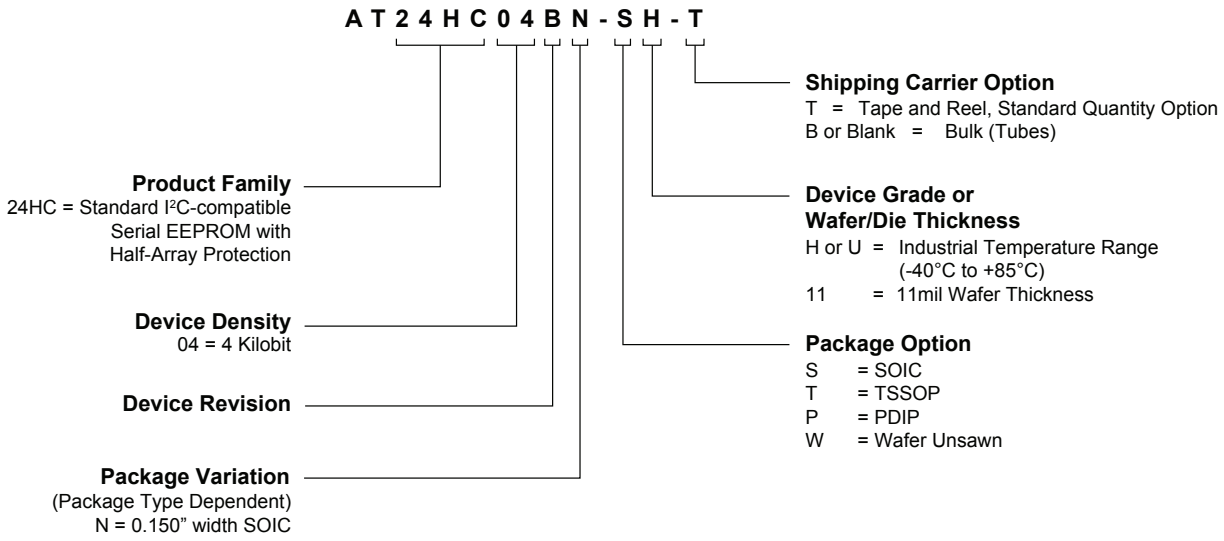

Examples

Device	Package	Package Drawing Code	Package Option	Shipping Carrier Option	Device Grade
AT24HC04B-PU	PDIP	P	P	Bulk (Tubes)	Industrial Temperature (-40°C to +85°C)
AT24HC04BN-SH-T	SOIC	SN	S	Tape and Reel	
AT24HC04BN-SH-B	SOIC	SN	S	Bulk (Tubes)	
AT24HC04B-TH-B	TSSOP	ST	T	Bulk (Tubes)	
AT24HC04B-TH-T	TSSOP	ST	T	Tape and Reel	

Microchip Devices Code Protection Feature

Note the following details of the code protection feature on Microchip devices:

- Microchip products meet the specification contained in their particular Microchip Data Sheet.
- Microchip believes that its family of products is one of the most secure families of its kind on the market today, when used in the intended manner and under normal conditions.
- There are dishonest and possibly illegal methods used to breach the code protection feature. All of these methods, to our knowledge, require using the Microchip products in a manner outside the operating specifications contained in Microchip's Data Sheets. Most likely, the person doing so is engaged in theft of intellectual property.
- Microchip is willing to work with the customer who is concerned about the integrity of their code.
- Neither Microchip nor any other semiconductor manufacturer can guarantee the security of their code. Code protection does not mean that we are guaranteeing the product as "unbreakable."

Downloaded from Arrow.com.

Code protection is constantly evolving. We at Microchip are committed to continuously improving the code protection features of our products. Attempts to break Microchip's code protection feature may be a violation of the Digital Millennium Copyright Act. If such acts allow unauthorized access to your software or other copyrighted work, you may have a right to sue for relief under that Act.

Legal Notice

Information contained in this publication regarding device applications and the like is provided only for your convenience and may be superseded by updates. It is your responsibility to ensure that your application meets with your specifications. MICROCHIP MAKES NO REPRESENTATIONS OR WARRANTIES OF ANY KIND WHETHER EXPRESS OR IMPLIED, WRITTEN OR ORAL, STATUTORY OR OTHERWISE, RELATED TO THE INFORMATION, INCLUDING BUT NOT LIMITED TO ITS CONDITION, QUALITY, PERFORMANCE, MERCHANTABILITY OR FITNESS FOR PURPOSE. Microchip disclaims all liability arising from this information and its use. Use of Microchip devices in life support and/or safety applications is entirely at the buyer's risk, and the buyer agrees to defend, indemnify and hold harmless Microchip from any and all damages, claims, suits, or expenses resulting from such use. No licenses are conveyed, implicitly or otherwise, under any Microchip intellectual property rights unless otherwise stated.

Trademarks

The Microchip name and logo, the Microchip logo, AnyRate, AVR, AVR logo, AVR Freaks, BitCloud, chipKIT, chipKIT logo, CryptoMemory, CryptoRF, dsPIC, FlashFlex, flexPWR, Heldo, JukeBlox, KeeLoq, Kleer, LANCheck, LINK MD, maXStylus, maXTouch, MediaLB, megaAVR, MOST, MOST logo, MPLAB, OptoLyzer, PIC, picoPower, PICSTART, PIC32 logo, Prochip Designer, QTouch, SAM-BA, SpyNIC, SST, SST Logo, SuperFlash, tinyAVR, UNI/O, and XMEGA are registered trademarks of Microchip Technology Incorporated in the U.S.A. and other countries.

ClockWorks, The Embedded Control Solutions Company, EtherSynch, Hyper Speed Control, HyperLight Load, IntelliMOS, mTouch, Precision Edge, and Quiet-Wire are registered trademarks of Microchip Technology Incorporated in the U.S.A.

Adjacent Key Suppression, AKS, Analog-for-the-Digital Age, Any Capacitor, AnyIn, AnyOut, BodyCom, CodeGuard, CryptoAuthentication, CryptoAutomotive, CryptoCompanion, CryptoController, dsPICDEM, dsPICDEM.net, Dynamic Average Matching, DAM, ECAN, EtherGREEN, In-Circuit Serial Programming, ICSP, INICnet, Inter-Chip Connectivity, JitterBlocker, KleerNet, KleerNet logo, memBrain, Mindi, MiWi, motorBench, MPASM, MPF, MPLAB Certified logo, MPLIB, MPLINK, MultiTRAK, NetDetach, Omniscient Code Generation, PICDEM, PICDEM.net, PICkit, PICtail, PowerSmart, PureSilicon, QMatrix, REAL ICE, Ripple Blocker, SAM-ICE, Serial Quad I/O, SMART-I.S., SQI, SuperSwitcher, SuperSwitcher II, Total Endurance, TSHARC, USBCheck, VariSense, ViewSpan, WiperLock, Wireless DNA, and ZENA are trademarks of Microchip Technology Incorporated in the U.S.A. and other countries.

SQTP is a service mark of Microchip Technology Incorporated in the U.S.A.

Silicon Storage Technology is a registered trademark of Microchip Technology Inc. in other countries.

GestIC is a registered trademark of Microchip Technology Germany II GmbH & Co. KG, a subsidiary of Microchip Technology Inc., in other countries.

All other trademarks mentioned herein are property of their respective companies.

© 2019, Microchip Technology Incorporated, Printed in the U.S.A., All Rights Reserved.

Downloaded from Arrow.com.

ISBN: 978-1-5224-4143-4

Quality Management System Certified by DNV

ISO/TS 16949

Microchip received ISO/TS-16949:2009 certification for its worldwide headquarters, design and wafer fabrication facilities in Chandler and Tempe, Arizona; Gresham, Oregon and design centers in California and India. The Company's quality system processes and procedures are for its PIC® MCUs and dsPIC® DSCs, KEELOQ® code hopping devices, Serial EEPROMs, microperipherals, nonvolatile memory and analog products. In addition, Microchip's quality system for the design and manufacture of development systems is ISO 9001:2000 certified.

Downloaded from Arrow.com.

Worldwide Sales and Service

AMERICAS	ASIA/PACIFIC	ASIA/PACIFIC	EUROPE
Corporate Office 2355 West Chandler Blvd. Chandler, AZ 85224-6199 Tel: 480-792-7200 Fax: 480-792-7277 Technical Support: http://www.microchip.com/support Web Address: www.microchip.com **Atlanta** Duluth, GA Tel: 678-957-9614 Fax: 678-957-1455 **Austin, TX** Tel: 512-257-3370 **Boston** Westborough, MA Tel: 774-760-0087 Fax: 774-760-0088 **Chicago** Itasca, IL Tel: 630-285-0071 Fax: 630-285-0075 **Dallas** Addison, TX Tel: 972-818-7423 Fax: 972-818-2924 **Detroit** Novi, MI Tel: 248-848-4000 **Houston, TX** Tel: 281-894-5983 **Indianapolis** Noblesville, IN Tel: 317-773-8323 Fax: 317-773-5453 Tel: 317-536-2380 **Los Angeles** Mission Viejo, CA Tel: 949-462-9523 Fax: 949-462-9608 Tel: 951-273-7800 **Raleigh, NC** Tel: 919-844-7510 **New York, NY** Tel: 631-435-6000 **San Jose, CA** Tel: 408-735-9110 Tel: 408-436-4270 **Canada - Toronto** Tel: 905-695-1980 Fax: 905-695-2078	**Australia - Sydney** Tel: 61-2-9868-6733 **China - Beijing** Tel: 86-10-8569-7000 **China - Chengdu** Tel: 86-28-8665-5511 **China - Chongqing** Tel: 86-23-8980-9588 **China - Dongguan** Tel: 86-769-8702-9880 **China - Guangzhou** Tel: 86-20-8755-8029 **China - Hangzhou** Tel: 86-571-8792-8115 **China - Hong Kong SAR** Tel: 852-2943-5100 **China - Nanjing** Tel: 86-25-8473-2460 **China - Qingdao** Tel: 86-532-8502-7355 **China - Shanghai** Tel: 86-21-3326-8000 **China - Shenyang** Tel: 86-24-2334-2829 **China - Shenzhen** Tel: 86-755-8864-2200 **China - Suzhou** Tel: 86-186-6233-1526 **China - Wuhan** Tel: 86-27-5980-5300 **China - Xian** Tel: 86-29-8833-7252 **China - Xiamen** Tel: 86-592-2388138 **China - Zhuhai** Tel: 86-756-3210040	**India - Bangalore** Tel: 91-80-3090-4444 **India - New Delhi** Tel: 91-11-4160-8631 **India - Pune** Tel: 91-20-4121-0141 **Japan - Osaka** Tel: 81-6-6152-7160 **Japan - Tokyo** Tel: 81-3-6880- 3770 **Korea - Daegu** Tel: 82-53-744-4301 **Korea - Seoul** Tel: 82-2-554-7200 **Malaysia - Kuala Lumpur** Tel: 60-3-7651-7906 **Malaysia - Penang** Tel: 60-4-227-8870 **Philippines - Manila** Tel: 63-2-634-9065 **Singapore** Tel: 65-6334-8870 **Taiwan - Hsin Chu** Tel: 886-3-577-8366 **Taiwan - Kaohsiung** Tel: 886-7-213-7830 **Taiwan - Taipei** Tel: 886-2-2508-8600 **Thailand - Bangkok** Tel: 66-2-694-1351 **Vietnam - Ho Chi Minh** Tel: 84-28-5448-2100	**Austria - Wels** Tel: 43-7242-2244-39 Fax: 43-7242-2244-393 **Denmark - Copenhagen** Tel: 45-4450-2828 Fax: 45-4485-2829 **Finland - Espoo** Tel: 358-9-4520-820 **France - Paris** Tel: 33-1-69-53-63-20 Fax: 33-1-69-30-90-79 **Germany - Garching** Tel: 49-8931-9700 **Germany - Haan** Tel: 49-2129-3766400 **Germany - Heilbronn** Tel: 49-7131-67-3636 **Germany - Karlsruhe** Tel: 49-721-625370 **Germany - Munich** Tel: 49-89-627-144-0 Fax: 49-89-627-144-44 **Germany - Rosenheim** Tel: 49-8031-354-560 **Israel - Ra'anana** Tel: 972-9-744-7705 **Italy - Milan** Tel: 39-0331-742611 Fax: 39-0331-466781 **Italy - Padova** Tel: 39-049-7625286 **Netherlands - Drunen** Tel: 31-416-690399 Fax: 31-416-690340 **Norway - Trondheim** Tel: 47-7289-7561 **Poland - Warsaw** Tel: 48-22-3325737 **Romania - Bucharest** Tel: 40-21-407-87-50 **Spain - Madrid** Tel: 34-91-708-08-90 Fax: 34-91-708-08-91 **Sweden - Gothenberg** Tel: 46-31-704-60-40 **Sweden - Stockholm** Tel: 46-8-5090-4654 **UK - Wokingham** Tel: 44-118-921-5800 Fax: 44-118-921-5820

Downloaded from Arrow.com.