PRODUCT NUMBER

98464–X61–XX–XXXLF

PLATING

S = 0.38µm GOLD/GXT ON CONTACT AREA 2µm MIN MATTE TIN ON TAIL

G = 0.76µm GOLD/GXT ON CONTACT AREA 2µm MIN MATTE TIN ON TAIL

F = GOLD FLASH ON CONTACT AREA 2µm MIN MATTE TIN ON TAIL

T = 2.0–5.0µm TIN FULL PLATED 1.27µm Ni MIN UNDERPLATING

RoHS COMPATIBLE, SEE NOTE 8

POLARIZATION (SEE NOTE 7)

PACKAGING OPTIONAL LETTER (SEE NOTE 5)

TOTAL NB OF POSITIONS, 04 TO 50

COLOR OPTION, NOTE 1

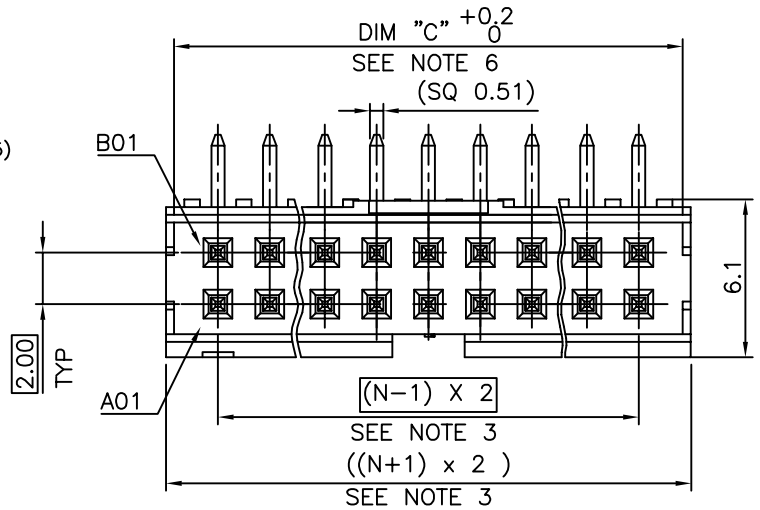

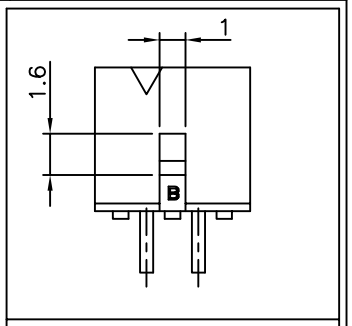

4 POSITIONS PRODUCT DESIGN

NOTES:

1. MATERIAL HOUSING: HIGH TEMP. THERMOPLASTIC UL 94V–0
   – = STANDARD COLOR CREAM
   B = OPTIONAL COLOR BLACK
2. MATERIAL TERMINAL: COPPER ALLOY
3. TO DETERMINE DIMENSIONS:
   N = NUMBER OF POSITIONS PER ROW
4. 7N MIN. PIN RETENTION IN EITHER DIRECTION.
5. PACKAGING:
   = STANDARD PACKAGING IN POLYBAGS
   – = POLYBAGS WHEN POLARISATION FEATURE APPLICABLE
   U = TUBE AVAILABLE FROM 06 TO 50 POS
6. DIM "C" = (N x 2.00) + 1.4
   EXAMPLE : N = 7
   DIM "C" = (7 x 2.00) + 1.4 = 15.4mm
7. FOR POLARIZATION, SPECIFIED PIN
   EXAMPLE: A03= ROW A, POSITION 03 TO OMIT PIN
   OMIT FROM PRODUCT NUMBER IF THIS FEATURE IS NOT APPLICABLE
8. RoHS COMPATIBLE PRODUCT SPECIFICATIONS

   a – PLATING:
   – "LF" MEANS THE PRODUCT IS LEAD–FREE, 2µm MINIMUM MATTE TIN OVER 1.27µm MINIMUM NICKEL UNDERPLATE.

   b – MANUFACTURING PROCESS COMPATIBILITY
   – THE HOUSING WILL WITHSTAND EXPOSURE TO 260°C ±5°C SOLDER BATH TEMPERATURE FOR 5 SECONDS IN A WAVE SOLDER APPLICATION WITH A 1.6mm MIN THICK CIRCUIT BOARD.
   – ALSO COMPATIBLE WITH REFLOW PROCESS 260°C PEAK TEMPERATURE FOR 30 SECONDES MAX IN A CONVECTION, INFRA–RED OR VAPOR PHASE OR REFLOW OVEN.

   c – LABELLING:
   – MEETS PACKAGING SPECS AS PER GS–14–920

   d – THIS PRODUCT MEETS EUROPEAN DIRECTIVES AND OTHER COUNTRY REGULATIONS AS DISCRIBED IN GS–47–0004

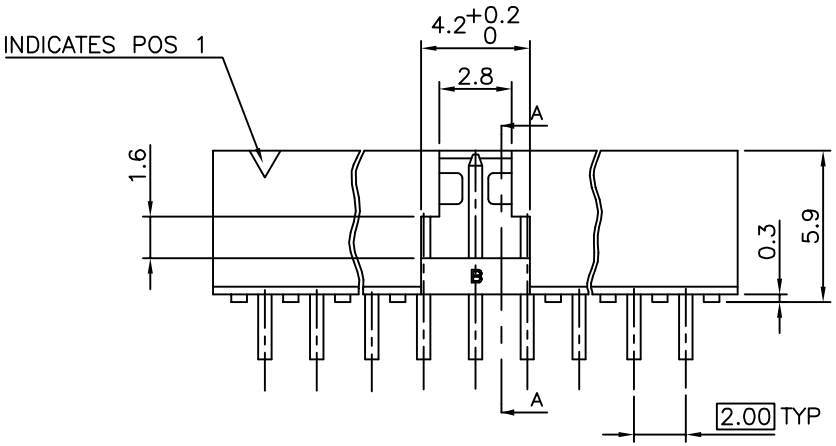

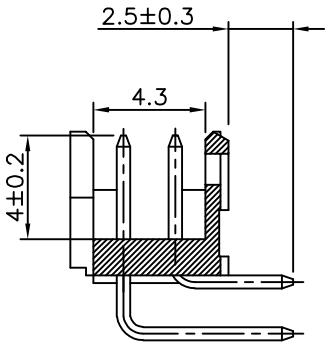

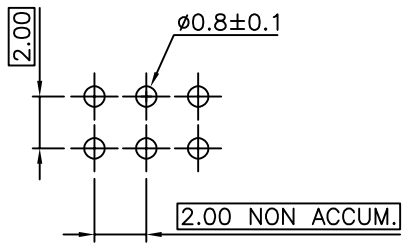

RECOMMENDED HOLE PATTERN

mat'l. code				surface	tolerance	projection
SEE NOTES				ISO 1302 ✓	ISO 406 ISO 1101	
ltr	ecn no	dr	date	tolerances unless otherwise specified		
L	B–15815	JCO	13.09.11	angles	linear X.X ±0.3	mm
M	B–19190	LMU	14.10.24		X.XX ±0.13	
N	B–19797	AMA	14.12.16		X.XXX ±0.05	scale 1:1
P	B–19988	LMU	15.01.13	dr	L.MULIN	04.09.27
R	B–20254	LMU	15.02.16	engr	J.COMPAGNON	04.09.27
S	F–32710	LMU	19.02.18	chr		
T	F–34292	LMU	22.07.19	appd	JM.C	04.09.27
sheet index	revision sheet					

product family: MINITEK

title: SHR HEADER 2.00 RIGHT ANGLE TMT

dwg no: 98464 | sheet 1 of 1 | size A3

type: CUSTOMER Drawing

form: A3

FCIconnect.com
Copyright FCI
Downloaded from Arrow.com.