| PART NUMBER | SML-LXR44GC-TR | REV | B |
|---|---|---|---|

## PROFILE

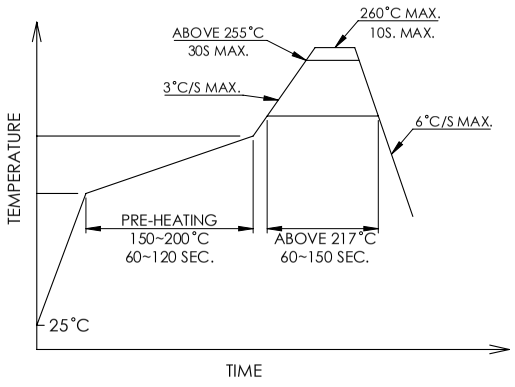


## CARRIER TAPE DIMENSION

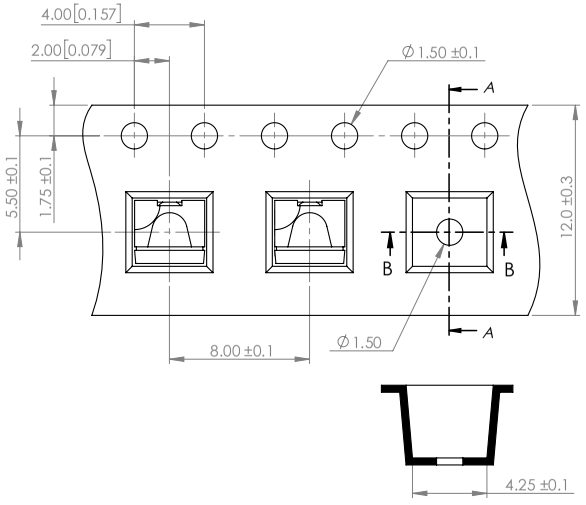


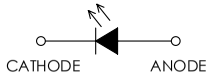


*UNLESS OTHERWISE SPECIFIED TOLERANCES PER DECIMAL PRECISION ARE: X=±1 (±0.039), X.X=±0.5 (±0.020), X.XX=±0.25 (±0.010), X.XXX=±0.127 (±0.005). LEAD SIZE=±0.05 (±0.002), LEAD LENGTH=±0.75 (±0.030). MIN= $^{+\text{DECIMAL PRECISION}}_{-0.00}$ MAX.= $^{+0.00}_{-\text{DECIMAL PRECISION}}$


LUMEX®
Creating LED and LCD Solutions Together™

425 N. GARY AVE.
CAROL STREAM, IL 60188
PHONE : 800-278-5666
FAX : 630-315-2150
WEB : WWW.LUMEX.COM


4(L)*4(W)*3.6(H)mm,RIGHT ANGLE BOOMERANG SURFACE MOUNT LED, 565nm GREEN LED, WATER CLEAR LENS.

**THE SPECIFICATIONS MAY CHANGE AT ANY TIME WITHOUT NOTICE DUE TO NEW MATERIALS OR PRODUCT IMPROVEMENT.**


CONFIDENTIAL INFORMATION
THE INFORMATION CONTAINED IN THIS DOCUMENT IS THE PROPERTY OF LUMEX INC. EXCEPT AS SPECIFICALLY AUTHORIZED IN WRITING BY LUMEX INC., THE HOLDER OF THIS DOCUMENT SHALL KEEP ALL INFORMATION CONTAINED HEREIN CONFIDENTIAL AND SHALL PROTECT SAME IN WHOLE OR IN PART FROM DISCLOSURE AND DISSEMINATION TO ALL THIRD PARTIES.


| | |
|---|---|
| DATE : 2017.10.24 | DRAWN BY : C.C. |
| PAGE : 2 OF 2 | CHKD BY : G.Y. |
| SCALE : NTF | APRVD BY : E.C. |
| UNIT : mm [INCH] | Pb |

Downloaded from Arrow.com.