Downloaded from Arrow.com.

PRODUCT NUMBER
51761-A00CCCDDEF__ NOTE 1
SEE NOTE 1

DIM	LENGTH FORMULAS (SEE NOTE 10)
DIM "A"	.250 [6.35] x DD + .100 [2.54] x (CCC/4) + .650 [16.51] (NOTE 10)
DIM "B"	.250 [6.35] x DD + .100 [2.54] x (CCC/4) + .350 [8.89]
DIM "C"	.250 [6.35] x DD + .100 [2.54] x (CCC/4) + .300 [7.62]
DIM "D"	.250 [6.35] x DD + .375 [9.53] P
DIM "F"	.250 [6.35] x DD + .100 [2.54] x (CCC/4) + .680 [17.27]
DIM "G"	.250 [6.35] x DD + .225 [5.72]

CONNECTOR NOTES

1. PRODUCT NUMBER CODE:
   51761 - A 00 CCC DD E F LF
   - LF — NO THIS SUFFIX:100u"/2.54um SnPb ON PCB INTERFACE; ADD THIS SUFFIX:78u"/2.00um Sn ON PCB INTERFACE
   - F — RETENTION TO PCB (NOTE 8)
   - E — TAIL OPTIONS (NOTE 7)
   - DD — NUMBER OF LEFT END POWER CONTACTS (NOTE 6)
   - CCC — NUMBER OF SIGNAL CONTACTS (NOTE 5)
   - 00 — ALWAYS '00' (ZERO, ZERO) (NOTE 4)
   - A — PLATING (NOTE 3)
   - 51761 — BASE NUMBER

2. HOUSING MATERIAL: GLASS FILLED V-O HIGH TEMP THERMO PLASTIC.
   SIGNAL CONTACT MATERIAL: COPPER ALLOY
   POWER CONTACT MATERIAL: COPPER ALLOY

3. PLATING OPTION:
   SEE PRINT 10064183 FOR PLATING SPEC OF 51761-100CCCDDEF; 51761-100CCCDDEFLF

4. THIS PART IS NOT AVAILABLE WITH RIGHT SIDE POWER CONTACTS.

5. SIGNAL CONTACTS, 004 TO 148 AVAILABLE FOR SOLDER TO BOARD.
   012 TO 148 AVAILABLE FOR PRESS FIT TO BOARD.

6. LEFT END POWER CONTACTS, 01 TO 20 AVAILABLE.
   MAXIMUM OF 20 POWER CONTACTS PER CONNECTOR

7. TAIL OPTIONS:
   A = .135 ±.010 [3.43 ±0.25] SOLDER TO BOARD
   B = .090 +.005 / -.010 [2.29 +0.13 / -0.25]
   SOLDER TO BOARD)
   C = .154 ±.010 [3.91 ±0.25] PRESS FIT TO BOARD

8. RETENTION TO PCB OPTIONS:
   A = BOARD LOCK (REQUIRES .098 +.002/-.001
   [2.49 +0.05/-0.03] THRU HOLE IN PCB
   MOUNTING FOOT HEIGHT:
   .220[5.59]
   B = .150 [3.81] THRU HOLE (REQUIRES .158 ±0.003
   [4.01 ±0.08] THRU HOLE IN PCB).
   MOUNTING FOOT HEIGHT
   .160[4.06]

9. MANUFACTURE'S NAME, P/N, AND DATE CODE
   TO APPEAR ON THIS SURFACE.

10. THE MAXIMUM OVERALL LENGTH (DIM A) OF A PART
    IS 8.00 [203.2]

11. PRODUCT SPECIFICATION GS-12-149

12. APPLICATION SPECIFICATION BUS-20-067.

13. FOR PRESS FIT CONNECTORS USE FCI CAM TOOL 430140-XXX
    TO APPLY CONNECTOR TO)PCB.

PCB NOTES:

14. ALL DIMENSIONS ARE BASIC UNLESS OTHERWISE SPECIFIED.

15. ALL THROUGH HOLES ARE LOCATED WITH A
    TRUE POSITION OF .004[0.10]

16. ALL HOLE DIAMETERS ARE FINISHED HOLE SIZE.

17. ∅0.0453 +/-.001 [1.151 ±0.02] DRILLED HOLES PLATED WITH
    0.0003 [0.007] MIN SnPb OR Sn OVER 0.001 [0.03] TO
    .003 [0.08] Cu PLATING TO ACHIEVE A .040±.003
    [1.02±08] HOLE.

18. A P SYMBOL WILL BE NEXT TO ANY DIMENSION, VIEW, OR
    NOTE WHICH HAS BEEN MODIFIED WITH THE CURRENT
    DRAWING REVISION.

THIS FILE WAS ORIGINALLY CREATED IN THE PRO ENGINEER ENVIRONMENT AND ANY FUTURE REVISIONS TO THIS FILE MUST BE MADE IN THE PRO ENGINEER ENVIRONMENT

mat'l code				tolerances unless otherwise specified		
ltr	ecn no.	dr	date		.XX±.01/.X±.3	
P				linear	.XXX±.005/.XX±.13	
					.XXXX±.0020/.XXX±.051	
				angles	0°±2°	
				dr	D.BOGLE	05-18-99
				engr	J. BROWN	05-18-99
				chr	J. BROWN	05-18-99
				appd	J. BROWN	05-18-99
sheet index	revision sheet					

CUSTOMER COPY

projection

INCH / MM

scale 1:1

FCI www.fciconnect.com

title RIGHT ANGLE RECEPTACLE w/GUIDE PIN SIGNAL / POWER

product family PWRBLADE

code 213

size A

dwg no 51761

SHEET 2 OF 3

cage code 22526

form no. 7530-001-103

Tous droits strictement reserves. Reproduction ou communication a des tiers interdite sous quelque forme que ce soit sans autorisation ecrite du propietaire. Propriete de c FCI. Droits de reproduction FCI.

All rights strictly reserved. Reproduction or issue to third parties in any form whatever is not permitted without written authority from the proprietor. Property of FCI. Copyright FCI.

Downloaded from Arrow.com.

PRODUCT NUMBER
51761 - A00CCCDDEF__ NOTE 1

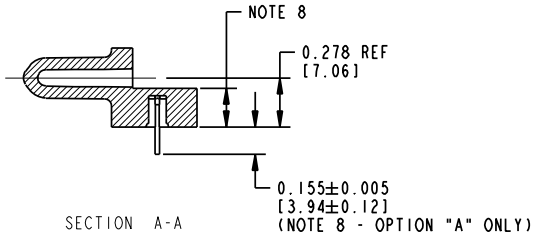

SECTION A-A

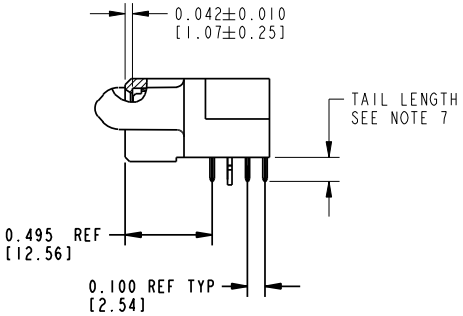

SECTION B-B

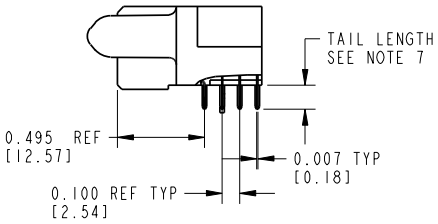

SECTION C-C

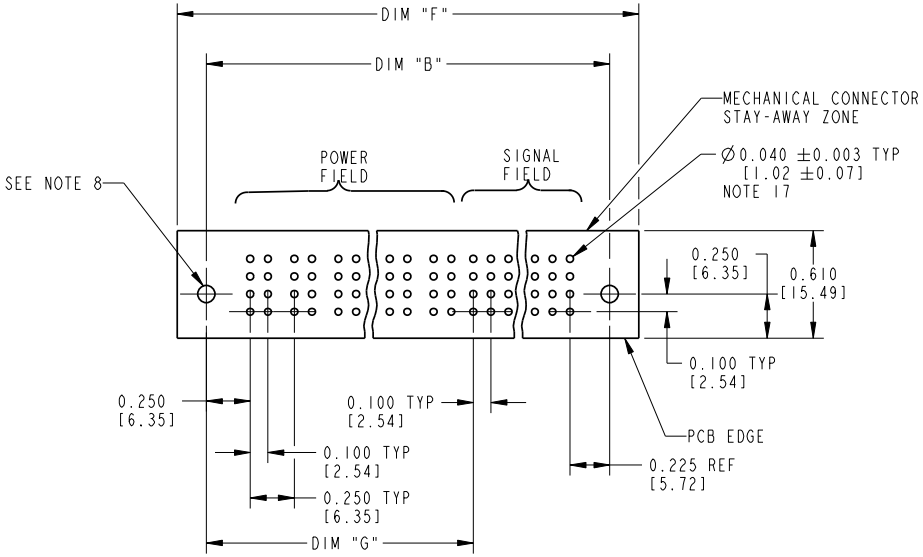

RECOMMENDED PCB LAYOUT

mat'l code				tolerances unless otherwise specified			CUSTOMER COPY	FCI www.fciconnect.com
ltr	ecn no.	dr	date		.XX±.01/.X±.3			
P				linear	.XXX±.005/.XX±.13		projection	title RIGHT ANGLE RECEPTACLE w/GUIDE PIN SIGNAL / POWER
					.XXXX±.0020/.XXX±.051			
				angles	0°±2°			
				dr	D.BOGLE	05-18-99	INCH / MM	product family PWRBLADE / code 213
				engr	J. BROWN	05-18-99		
				chr	J. BROWN	05-18-99	scale 1:1	size A / dwg no 51761
				appd	J. BROWN	05-18-99		SHEET 3 OF 3
sheet index	revision sheet							

form no. 7530-001-103

cage code 22526

Tous droits strictement reserves. Reproduction ou communication a des tiers interdite sous quelque forme que ce soit sans autorisation ecrite du propietaire. Propriete de c FCI. Droits de reproduction FCI.

All rights strictly reserved. Reproduction or issue to third parties in any form whatever is not permitted without written authority from the proprietor. Property of FCI. Copyright FCI.