Features

- **Advanced Switch Features**
  - IEEE 802.1q VLAN support for up to 16 groups (full-range of VLAN IDs)
  - VLAN ID tag/untag options, per port basis
  - IEEE 802.1p/q tag insertion or removal on a per port basis (egress)
  - Programmable rate limiting at the ingress and egress on a per port basis
  - Broadcast storm protection with % control (global and per port basis)
  - IEEE 802.1d rapid spanning tree protocol support
  - tail tag mode (1 byte added before FCS) support at port 3 to inform the processor which ingress port receives the packets
  - Bypass feature which automatically sustains the switch function between Port 1 and Port 2 when CPU (Port 3 interface) goes to the sleep mode.
  - Support self-address filtering
  - Individual MAC address for port1 and port2
  - IGMP snooping (Ipv4) support for multicast packet filtering
  - IPv4/IPv6 QoS support
  - MAC filtering function to forward unknown unicast packets to specified port
- **Comprehensive Configuration Register Access**
  - Serial management interface (SMI) to all internal registers
  - MII management (MIIM) interface to PHY registers
  - High speed SPI and I^2C Interface to all internal registers
  - I/0 pins strapping and EEPROM to program selective registers in unmanaged switch mode
  - Control registers configurable on the fly (port-priority, 802.1p/d/q, AN…)
- **QoS/CoS Packet Prioritization Support**
  - Per port, 802.1p and DiffServ-based
  - Re-mapping of 802.1p priority field per port basis Four priority levels
- **Proven Integrated 3-Port 10/100 Ethernet Switch**
  - 3rd generation switch with three MACs and one PHYs fully compliant with IEEE 802.3u standard
  - Non-blocking switch fabric assures fast packet delivery by utilizing an 1K MAC address lookup table and a store-and-forward architecture
  - Full duplex IEEE 802.3x flow control (PAUSE) with force mode option
  - Half-duplex back pressure flow control
  - HP Auto MDI-X for reliable detection of and correction for straight-through and crossover cables with disable and enable option
  - MAC MII interface supports both MAC mode and PHY mode
  - Micrel LinkMD® TDR-based cable diagnostics permit identification of faulty copper cabling
  - Comprehensive LED Indicator support for link, activity, full/half duplex and 10/100 speed
  - HBM ESD Rating +/-3kV
- **Switch Monitoring Features**
  - Port mirroring/monitoring/sniffing: ingress and/or egress traffic to any port or MII
  - MIB counters for fully compliant statistics gathering, 34 MIB counters per port
  - Loopback modes for remote diagnostic of failure
- **Low Power Dissipation**
  - Full-chip hardware power-down (register configuration not saved)
  - Full-chip software power-down (register configuration not saved)
  - Energy-detect mode support
  - Dynamic clock tree shutdown feature
  - Per port based software power-save on PHY (idle link detection, register configuration preserved)
  - Voltages: Single 3.3V supply with internal 1.8V LDO for 3.3V VDDIO
  - Optional 3.3V, 2.5V and 1.8V for VDDIO
  - Transceiver power 3.3V for VDDA_3.3
- **Industrial Temperature Range: –40ºC to +85ºC**
- **Available in 64-Pin LQFP, Lead-free package**

Applications

- **Typical**
  - VoIP Phone
  - Set-top/Game Box
  - Automotive
  - Industrial Control
  - IPTV POF
  - SOHO Residential Gateway
  - Broadband Gateway / Firewall / VPN
  - Integrated DSL/Cable Modem
  - Wireless LAN access point + gateway
  - Standalone 10/100 switch

Downloaded from Arrow.com.

Ordering Information

Part Number	Temperature Range	Package	Lead Finish/Grade
KSZ8873MML	0°C to 70°C	64-Pin LQFP	Pb-Free/Commercial
KSZ8873MMLI	–40°C to +85°C	64-Pin LQFP	Pb-Free/Industrial

Revision History

Revision	Date	Summary of Changes
1.0	02/25/08	Initial Release
1.1	06/26/09	Combined Register Description to initial release.
1.2	07/15/09	Modify the pin number in Table 12. SPI connections
1.3	09/08/09	Remove LinkMD feature. Updated the Electrical Characteristics
	09/23/09	Add LinkMD feature on Port 2. Fix the typo on register 194
	10/01/09	Modify the descriptions of pin 31(SMRXD31), pin 48(SMXRD11) and pin 62(P1LED0)
1.4	08/10/10	Remove Turbo MII/RMII feature and their timing, add MDC/MDIO timing, update the descriptions of the by-pass mode, tag insertion, power management, pins, registers and so on. Update max rating and electrical characteristics.
1.5	05/25/11	Update register 6 with strap pins description, Junction Thermal and so on. Add the descriptions of the registers from register 175-186. Add a note for port register control 12, update the description for some registers, update reset timing diagram.
1.6	08/10/11	Updated description for MDC/MDIO SMI mode and IGMP mode. ESD rating updated to 3kV. Update data of the lead temperature.

Downloaded from Arrow.com.

Contents

Pin Description and I/O Assignment **8**
Pin Configuration **14**
Functional Description **15**
Functional Overview: Physical Layer Transceiver **15**
100BASE-TX Transmit 15
100BASE-TX Receive 15
PLL Clock Synthesizer 15
Scrambler/De-scrambler (100BASE-TX Only) 15
10BASE-T Transmit 15
10BASE-T Receive 16
MDI/MDI-X Auto Crossover 16
Auto-Negotiation 19
LinkMD® Cable Diagnostics 20
Access *20*
Usage *20*
Functional Overview: Power Management **21**
Normal Operation Mode 21
Energy Detect Mode 21
Soft Power Down Mode 21
Power Saving Mode 21
Port based Power Down Mode 22
Hardware Power Down 22
Functional Overview: MAC and Switch **22**
Address Lookup 22
Learning 22
Migration 22
Aging 22
Forwarding 22
Switching Engine 25
MAC Operation 25
Inter Packet Gap (IPG) *25*
Back-Off Algorithm *25*
Late Collision *25*
Illegal Frames *25*
Full Duplex Flow Control *25*
Half-Duplex Backpressure *25*
Broadcast Storm Protection *26*
MII Interface Operation 26
MII Management (MIIM) Interface 27
Serial Management Interface (SMI) 28
Advanced Switch Functions **30**
Bypass Mode 30
IEEE 802.1Q VLAN Support 30
QoS Priority Support 31
DiffServ-Based Priority *32*
Spanning Tree Support 32
Rapid Spanning Tree Support 33
Tail Tagging Mode 33
IGMP Support 34
IGMP Snooping *34*
IGMP Send Back to the Subscribed Port *34*
Port Mirroring Support 34
Rate Limiting Support 35
Unicast MAC Address Filtering 35

Downloaded from Arrow.com.

Configuration Interface 35
Loopback Support 40
MII Management (MIIM) Registers 41
Memory Map (8-bit Registers) 46
Global Registers 46
Port Registers 46
Advanced Control Registers 46
Register Description 47
Global Registers (Registers 0 – 15) 47
Port Registers (Registers 16 – 95) 54
Advanced Control Registers (Registers 96-198) 64
Static MAC Address Table 78
VLAN Table 80
Dynamic MAC Address Table 81
MIB (Management Information Base) Counters 82
Additional MIB Counter Information 85
Absolute Maximum Ratings[1] 86
Operating Ratings[2] 86
Electrical Characteristics[5] 86
EEPROM Timing 88
MII Timing 89
I^2C Slave Mode Timing 91
SPI Timing 93
Auto-Negotiation Timing 95
MDC/MDIO Timing 96
Reset Timing 97
Reset Circuit 98
Selection of Isolation Transformers 99
Selection of Reference Crystal 99
Package Information 100

Downloaded from Arrow.com.

List of Figures

Figure 1. Typical Straight Cable Connection 17
Figure 2. Typical Crossover Cable Connection 18
Figure 3. Auto-Negotiation and Parallel Operation 19
Figure 4. Destination Address Lookup Flow Chart, Stage 1 23
Figure 5. Destination Address Resolution Flow Chart, Stage 2 24
Figure 6. 802.1p Priority Field Format 31
Figure 7. Tail Tag Frame Format 33
Figure 8. Tail Tag Rules 34
Figure 9. EEPROM Configuration Timing Diagram 36
Figure 10. SPI Write Data Cycle 38
Figure 11. SPI Read Data Cycle 38
Figure 12. SPI Multiple Write 38
Figure 13. SPI Multiple Read 39
Figure 14. Near-end (Remote) Loopback Path 40
Figure 15. EEPROM Interface Input Timing Diagram 88
Figure 16. EEPROM Interface Output Timing Diagram 88
Figure 17. MAC Mode MII Timing – Data Received from MII 89
Figure 18. MAC Mode MII Timing – Data Transmitted to MII 89
Figure 19. PHY Mode MII Timing – Data Received from MII 90
Figure 20. PHY Mode MII Timing – Data Transmitted to MII 90
Figure 21. I2C Input Timing 91
Figure 22. I2C Start Bit Timing 91
Figure 23. I2C Stop Bit Timing 91
Figure 24. I2C Output Timing 91
Figure 25. SPI Input Timing 93
Figure 26. SPI Output Timing 94
Figure 27. Auto-Negotiation Timing 95
Figure 28. MDC/MDIO Timing 96
Figure 29. Reset Timing 97
Figure 30. Recommended Reset Circuit 98
Figure 31. Recommended Reset Circuit for interfacing with CPU/FPGA Reset Output 98
Figure 32. 64-Pin LQFP Package 101

Downloaded from Arrow.com.

List of Tables

Table 1. MDI/MDI-X Pin Definitions 16
Table 2. Internal Function Block Status 21
Table 3. MII Signals 27
Table 4. MII Management Interface Frame Format 28
Table 5. Serial Management Interface (SMI) Frame Format 29
Table 6. FID+DA Lookup in VLAN Mode 30
Table 7. FID+SA Lookup in VLAN Mode 31
Table 8. Spanning Tree States 32
Table 9. SPI Connections 37
Table 10. Data Rate Limit Table 59
Table 11. Format of Static MAC Table (8 Entries) 78
Table 12. Format of Static VLAN Table (16 Entries) 80
Table 13. Format of Dynamic MAC Address Table (1K Entries) 81
Table 14. Format of “Per Port” MIB Counters 82
Table 15. Port 1’s “Per Port” MIB Counters Indirect Memory Offsets 83
Table 16. Format of “All Port Dropped Packet” MIB Counters 83
Table 17. “All Port Dropped Packet” MIB Counters Indirect Memory Offsets 84
Table 18. EEPROM Timing Parameters 88
Table 19. MAC Mode MII Timing Parameters 89
Table 20. PHY Mode MII Timing Parameters 90
Table 21. I2C Timing Parameters 92
Table 22. SPI Input Timing Parameters 93
Table 23. SPI Output Timing Parameters 94
Table 24. Auto-Negotiation Timing Parameters 95
Table 25. MDC/MDIO Timing Parameters 96
Table 26. Reset Timing Parameters 97
Table 27. Transformer Selection Criteria 99
Table 28. Qualified Single Port Magnetics 99
Table 29. Typical Reference Crystal Characteristics 99

Downloaded from Arrow.com.

Pin Description and I/O Assignment

Pin Number	Pin Name	Type [1]	Description
1	RSTN	Ipu	Hardware reset pin (active low)
2	VDDA_1.8	P	1.8V analog core power input from VDDCO (pin 59)
3	AGND	Gnd	Analog ground
4	NC	NC	Unused pin. No external connection.
5	NC	NC	Unused pin. No external connection.
6	VDDA_3.3	P	3.3V analog V_{DD}
7	AGND	Gnd	Analog ground.
8	ISET	O	Set physical transmit output current. Pull-down this pin with an 11.8K 1% resistor to ground.
9	VDDA_1.8	P	1.8 analog VDD input power supply from VDDCO (pin 59) through external Ferrite bead and capacitor.
10	RXM2	I/O	Physical receive or transmit signal (– differential)
11	RXP2	I/O	Physical receive or transmit signal (+ differential)
12	AGND	Gnd	Analog ground.
13	TXM2	I/O	Physical transmit or receive signal (– differential)
14	TXP2	I/O	Physical transmit or receive signal (+ differential)
15	NC	NC	No Connection
16	PWRND	Ipu	Chip power down input (active low).
17	X1	I	25 or 50MHz crystal/oscillator clock connections. Pins (X1, X2) connect to a crystal. If an oscillator is used, X1 connects to a 3.3V tolerant oscillator and X2 is a no connect. Note: Clock is +/- 50ppm for both crystal and oscillator, the clock should be applied to X1 pin before reset voltage goes high.
18	X2	O	
19	SMTXEN3	Ipu	Switch MII transmit enable
20	SMTXD33/	Ipu	Switch MII transmit data bit 3
21	SMTXD32	Ipu	Switch MII transmit data bit 2
22	SMTXD31	Ipu	Switch MII transmit data bit 1
23	SMTXD30	Ipu	Switch MII transmit data bit 0
24	GND	Gnd	Digital ground
25	VDDIO	P	3.3V, 2.5V or 1.8V digital VDD input power supply for IO with well decoupling capacitors.
26	SMTXC3	I/O	Switch MII transmit clock (MII modes only) Output in PHY MII mode Input in MAC MII.
27	SMTXER3/ MII_LINK_3	Ipu	Switch port3 MII transmit error in MII mode 0= MII link indicator from host in MII PHY mode. 1= No link on port 3 MII PHY mode and enable By-pass mode.
28	SMRXDV3	Ipu/O	Switch MII receive data valid **Strap option:** MII mode selection for port 3 PU = PHY mode. PD = MAC mode (In MAC mode, port 3 MII has to connect to a powered active external PHY for the normal operation)

Downloaded from Arrow.com.

Pin Description and I/O Assignment (Continued)

Pin Number	Pin Name	Type [1]	Description
29	SMRXD33	Ipu/O	Switch MII receive data bit 3 **Strap option:** enable auto-negotiation on port 2 (P2ANEN) PU = enable PD = disable
30	SMRXD32	Ipu/O	Switch MII receive data bit 2 **Strap option:** Force the speed on port 2 (P2SPD) PU = force port 2 to 100BT if P2ANEN = 0 PD = force port 2 to 10BT if P2ANEN = 0
31	SMRXD31	Ipu/O	Switch MII receive data bit 1 **Strap option:** Force duplex mode (P2DPX) PU = port 2 default to full duplex mode if P2ANEN = 1 and auto-negotiation fails. Force port 2 in full duplex mode if P2ANEN = 0. PD = Port 2 set to half duplex mode if P2ANEN = 1 and auto-negotiation fails. Force port 2 in half duplex mode if P2ANEN = 0.
32	SMRXD30	Ipu/O	Switch MII receive data bit 0 **Strap option:** Force flow control on port 2 (P2FFC) PU = always enable (force) port 2 flow control feature. PD = port 2 flow control feature enable is determined by auto-negotiation result.
33	SCRS3	Ipu/O	Switch MII carrier sense
34	SCOL3	Ipu/O	Switch MII collision detect
35	SMRXC3	I/O	Switch MII receive clock. Output in PHY MII mode Input in MAC MII mode
36	GND	Gnd	Digital ground
37	VDDC	P	1.8V digital core power input from VDDCO (pin 59).
38	SPIQ	Ipu/O	SPI slave mode: serial data output Note: an external pull-up is needed on this pin when it is in use. **Strap option:** XCLK Frequency Selection PU = 25MHz PD = 50MHz
39	SPISN	Ipu	SPI slave mode: chip select (active low) When SPISN is high, the KSZ8873MML is deselected and SPIQ is held in high impedance state. A high-to-low transition is used to initiate SPI data transfer. Note: an external pull-up is needed on this pin when it is in use.
40	INTRN	Opu	Interrupt Active Low signal to host CPU to indicate an interrupt status bit is set. Refer to register 187 and 188.
41	SCL_MDC	I/O	SPI slave mode / I^2C slave mode: clock input I^2C master mode: clock output MIIM: clock input

Downloaded from Arrow.com.

Pin Description and I/O Assignment (Continued)

Pin Number	Pin Name	Type [1]	Description
42	SDA_MDIO	Ipu/O	SPI slave mode: serial data input I^2C master/slave mode: serial data input/output MIM: data input/out Note: an external pull-up is needed on this pin when it is in use.
43	SCRS1	I/O	Switch MII collision detect
44	SCOL1	I/O	Switch MII collision detect
45	SMRXC1	I/O	Switch MII receive clock. Output in PHY MII mode Input in MAC MII mode
46	SMRXD13	Lpu/O	Switch MII receive data bit 3 **Strap option:** MII mode selection for port 1 PU = PHY mode. PD = MAC mode (In MAC mode, port 1 MII has to connect to an powered active external PHY for the normal operation)
47	SMRXD12	Ipu/O	Switch MII receive data bit 2 **Strap option:** Force the speed on port 1 (P1SPD) PU = force port 1 to 100BT PD = force port 1 to 10BT
48	SMRXD11	Ipu/O	Switch MII receive data bit 1 **Strap option:** Force duplex mode on port 1 (P1DPX) PU = port 1 default to full duplex mode. PD = Port 1 set to half duplex mode.
49	SMRXD10	Ipu/O	Switch MII receive data bit 0 **Strap option:** Force flow control on port 1 (P1FFC) PU = always enable (force) port 1 flow control feature. PD = disable.
50	SMRXDV1	Ipd/O	Switch MII receive data valid **Strap option:** Force the speed on port 3 (P3SPD) PU = force port 3 to 10BT PD = force port 3 to 100BT
51	SMTXER1/ MII_LINK_1	Ipd	Switch port 1 MII transmit error in MII mode 0= MII link indicator from host in MII PHY mode. 1= No link on port 1 MII PHY mode and enable By-pass mode.
52	SMTXD13	I	Switch MII transmit data bit 3
53	SMTXD12	I	Switch MII transmit data bit 2
54	SMTXD11	I	Switch MII transmit data bit 1
55	SMTXD10	I	Switch MII transmit data bit 0
56	SMTXC1	I/O	Switch MII transmit clock (MII modes only) Output in PHY MII mode Input in MAC MII.
57	VDDIO	P	3.3V, 2.5V or 1.8V digital VDD input power supply for IO with well decoupling capacitors.
58	GND	Gnd	Digital ground

Downloaded from Arrow.com.

Pin Description and I/O Assignment (Continued)

Pin Number	Pin Name	Type [1]	Description
59	VDDCO	P	1.8V core power voltage output (internal 1.8V LDO regulator output), this 1.8V output pin provides power to both VDDA_1.8 and VDDC input pins. Note: Internally 1.8V LDO regulator input comes from VDDIO. Do not connect an external power supply to VDDCO pin. The ferrite bead is requested between analog and digital 1.8V core power.
60	SMTXEN1	I	Switch MII transmit enable
61	P1LED1	Ipu/O	**Port 1 LED Indicators: (Not used)** **Strap option:** Port 3 flow control selection(P3FFC) PU = always enable (force) port 3 flow control feature PD = disable
62	P1LED0	Ipd/O	**Port 1 LED Indicators: (Not used)** **Strap option:** Port 3 duplex mode selection(P3DPX) PU = port 3 set to half duplex mode PD = port 3 set to full duplex mode (default)

Downloaded from Arrow.com.

Pin Description and I/O Assignment (Continued)

Pin Number	Pin Name	Type [1]	Description
63	P2LED1	Ipu/O	**Port 2 LED Indicators:** Default: Speed (refer to register 195 bit[5:4]) **Strap option:** Serial bus configuration **Port 2 LED Indicators:** Default: Link/Act. (refer to register 195 bit[5:4]) **Strap option**: Serial bus configuration Serial bus configuration pins to select mode of access to KSZ8873MML internal registers. **[P2LED1, P2LED0] = [0, 0] — I^2C master (EEPROM) mode** (If EEPROM is not detected, the KSZ8873MML will be configured with the default values of its internal registers and the values of its strap-in pins.)
64	P2LED0	Ipu/O	

Interface Signals	Type	Description
SPIQ	O	Not used (tri-stated)
SCL	O	I^2C clock
SDA	I/O	I^2C data I/O
SPIS_N	I	Not used

[P2LED1, P2LED0] = [0, 1] — I^2C slave mode

The external I^2C master will drive the SCL clock.

The KSZ8873MML device addresses are:

1011_1111 <read>

1011_1110 <write>

Interface Signals	Type	Description
SPIQ	O	Not used (tri-stated)
SCL	I	I^2C clock
SDA	I/O	I^2C data I/O
SPIS_N	I	Not used

[P2LED1, P2LED0] = [1, 0] — SPI slave mode

Interface Signals	Type	Description
SPIQ	O	SPI data out
SCL	I	SPI clock
SDA	I	SPI data In
SPIS_N	I	SPI chip select

[P2LED1, P2LED0] = [1, 1] – SMI/MIIM-mode

In SMI mode, the KSZ8873MML provides access to all its internal 8-bit registers through its SCL_MDC and SDA_MDIO pins.

In MIIM mode, the KSZ8873MML provides access to its 16-bit MIIM registers through its SDC_MDC and SDA_MDIO pins.

Notes:

1. Speed : Low (100BASE-TX), High (10BASE-T)
   Full duplex : Low (full duplex), High (half duplex)
   Act : Toggle (transmit / receive activity)
   Link : Low (link), High (no link)
2. P = Power supply.
   Gnd = Ground.
   I = Input.
   Ipu/O = Input with internal pull-up during reset, output pin otherwise.
   Ipu = Input w/ internal pull-up.
   Ipd = Input w/ internal pull-down.

Downloaded from Arrow.com.

Opu = Output w/ internal pull-up.
Opd = Output w/ internal pull-down.

Downloaded from Arrow.com.

Pin Configuration

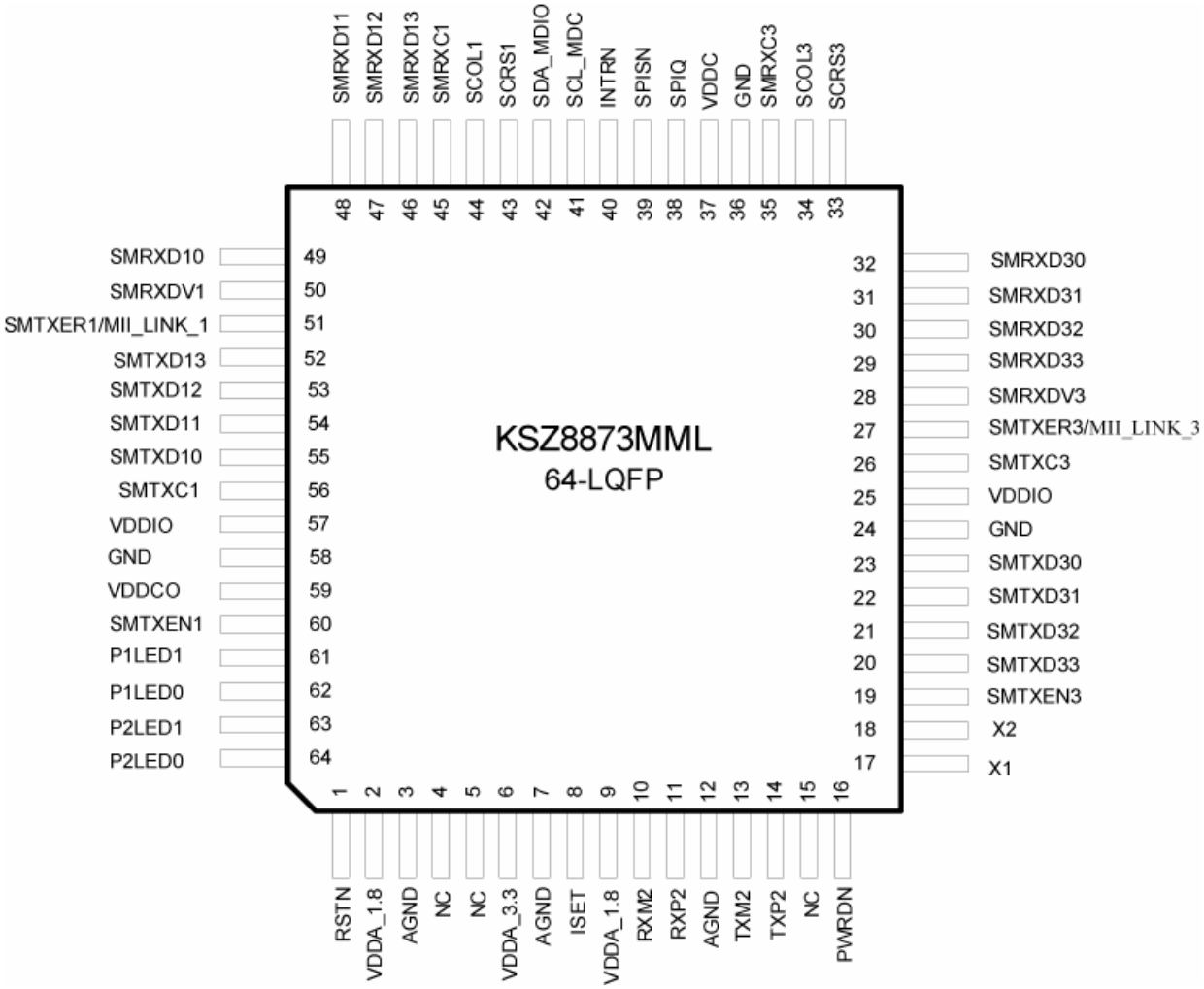

64-Pin LQFP (V)
(Top View)

Downloaded from Arrow.com.

Functional Description

The KSZ8873MML contains one 10/100 physical layer transceivers and three MAC units with an integrated Layer 2 managed switch.

The KSZ8873MML has the flexibility to reside in either a managed or unmanaged design. In a managed design, the host processor has complete control of the KSZ8873MML via the SMI interface, MIIM interface, SPI bus, or I^2C bus. An unmanaged design is achieved through I/O strapping and/or EEPROM programming at system reset time.

On the media side, the KSZ8873MML supports IEEE 802.3 10BASE-T and 100BASE-TX on both PHY ports. Physical signal transmission and reception are enhanced through the use of patented analog circuitries that make the design more efficient and allow for lower power consumption and smaller chip die size.

Functional Overview: Physical Layer Transceiver

100BASE-TX Transmit

The 100BASE-TX transmit function performs parallel-to-serial conversion, 4B/5B coding, scrambling, NRZ-to-NRZI conversion, and MLT3 encoding and transmission.

The circuitry starts with a parallel-to-serial conversion, which converts the MII data from the MAC into a 125MHz serial bit stream. The data and control stream is then converted into 4B/5B coding, followed by a scrambler. The serialized data is further converted from NRZ-to-NRZI format, and then transmitted in MLT3 current output. The output current is set by an external1% 11.8kΩ resistor for the 1:1 transformer ratio.

The output signal has a typical rise/fall time of 4ns and complies with the ANSI TP-PMD standard regarding amplitude balance, overshoot, and timing jitter. The wave-shaped 10BASE-T output is also incorporated into the 100BASE-TX transmitter.

100BASE-TX Receive

The 100BASE-TX receiver function performs adaptive equalization, DC restoration, MLT3-to-NRZI conversion, data and clock recovery, NRZI-to-NRZ conversion, de-scrambling, 4B/5B decoding, and serial-to-parallel conversion.

The receiving side starts with the equalization filter to compensate for inter-symbol interference (ISI) over the twisted pair cable. Since the amplitude loss and phase distortion is a function of the cable length, the equalizer must adjust its characteristics to optimize performance. In this design, the variable equalizer makes an initial estimation based on comparisons of incoming signal strength against some known cable characteristics, and then tunes itself for optimization. This is an ongoing process and self-adjusts against environmental changes such as temperature variations.

Next, the equalized signal goes through a DC restoration and data conversion block. The DC restoration circuit is used to compensate for the effect of baseline wander and to improve the dynamic range. The differential data conversion circuit converts the MLT3 format back to NRZI. The slicing threshold is also adaptive.

The clock recovery circuit extracts the 125MHz clock from the edges of the NRZI signal. This recovered clock is then used to convert the NRZI signal into the NRZ format. This signal is sent through the de-scrambler followed by the 4B/5B decoder. Finally, the NRZ serial data is converted to the MII format and provided as the input data to the MAC.

PLL Clock Synthesizer

The KSZ8873MML generates 125MHz, 62.5MHz, and 31.25MHz clocks for system timing. Internal clocks are generated from an external 25MHz or 50MHz crystal or oscillator.

Scrambler/De-scrambler (100BASE-TX Only)

The purpose of the scrambler is to spread the power spectrum of the signal to reduce electromagnetic interference (EMI) and baseline wander. Transmitted data is scrambled through the use of an 11-bit wide linear feedback shift register (LFSR). The scrambler generates a 2047-bit non-repetitive sequence, and the receiver then de-scrambles the incoming data stream using the same sequence as at the transmitter.

10BASE-T Transmit

The 10BASE-T driver is incorporated with the 100BASE-TX driver to allow for transmission using the same magnetic. They are internally wave-shaped and pre-emphasized into outputs with typical 2.3V amplitude. The harmonic contents are at least 27dB below the fundamental frequency when driven by an all-ones Manchester-encoded signal.

Downloaded from Arrow.com.

10BASE-T Receive

On the receive side, input buffers and level detecting squelch circuits are employed. A differential input receiver circuit and a phase-locked loop (PLL) perform the decoding function. The Manchester-encoded data stream is separated into clock signal and NRZ data. A squelch circuit rejects signals with levels less than 400mV or with short pulse widths to prevent noise at the RXP-or-RXM input from falsely triggering the decoder. When the input exceeds the squelch limit, the PLL locks onto the incoming signal and the KSZ8873MML decodes a data frame. The receiver clock is maintained active during idle periods in between data reception.

MDI/MDI-X Auto Crossover

To eliminate the need for crossover cables between similar devices, the KSZ8873MML supports HP Auto MDI/MDI-X and IEEE 802.3u standard MDI/MDI-X auto crossover. HP Auto MDI/MDI-X is the default.

The auto-sense function detects remote transmit and receive pairs and correctly assigns transmit and receive pairs for the KSZ8873MML device. This feature is extremely useful when end users are unaware of cable types, and also, saves on an additional uplink configuration connection. The auto-crossover feature can be disabled through the port control registers, or MIIM PHY registers.

The IEEE 802.3u standard MDI and MDI-X definitions are:

MDI		MDI-X	
RJ-45 Pins	**Signals**	**RJ-45 Pins**	**Signals**
1	TD+	1	RD+
2	TD-	2	RD-
3	RD+	3	TD+
6	RD-	6	TD-

Table 1. MDI/MDI-X Pin Definitions

Downloaded from Arrow.com.

Straight Cable

A straight cable connects an MDI device to an MDI-X device, or an MDI-X device to an MDI device. The following diagram depicts a typical straight cable connection between a NIC card (MDI) and a switch, or hub (MDI-X).

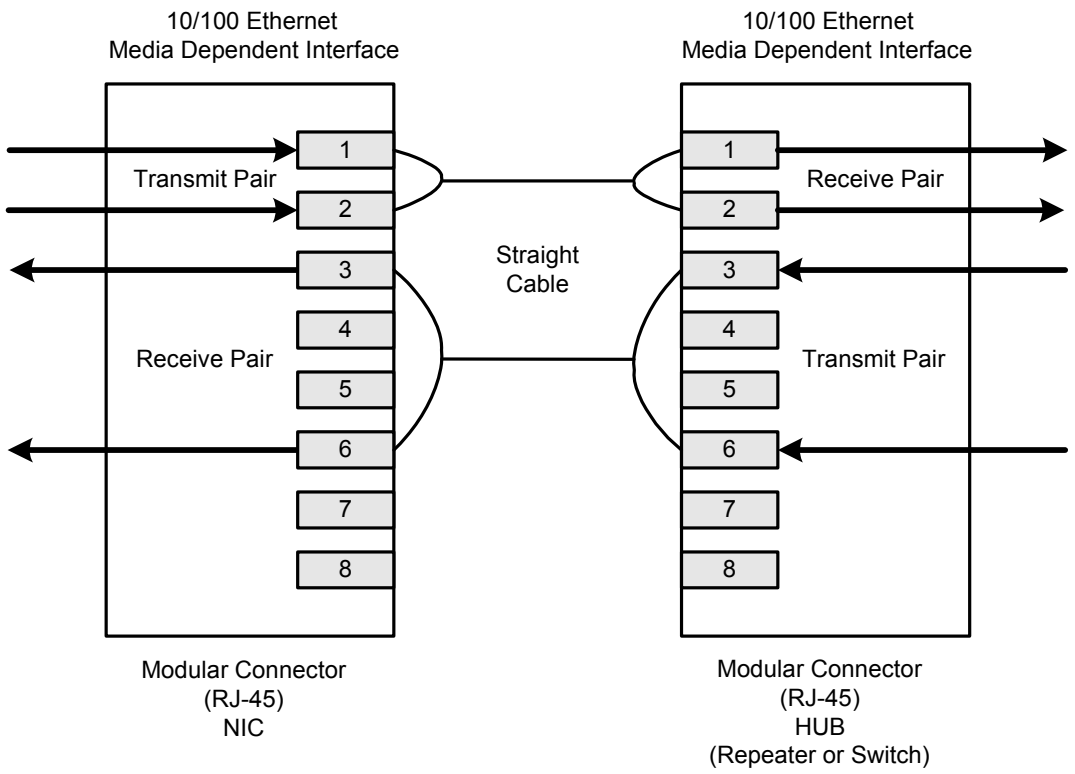

Figure 1. Typical Straight Cable Connection

Downloaded from Arrow.com.

Crossover Cable

A crossover cable connects an MDI device to another MDI device, or an MDI-X device to another MDI-X device. The following diagram shows a typical crossover cable connection between one switches or hubs (one MDI-X devices).

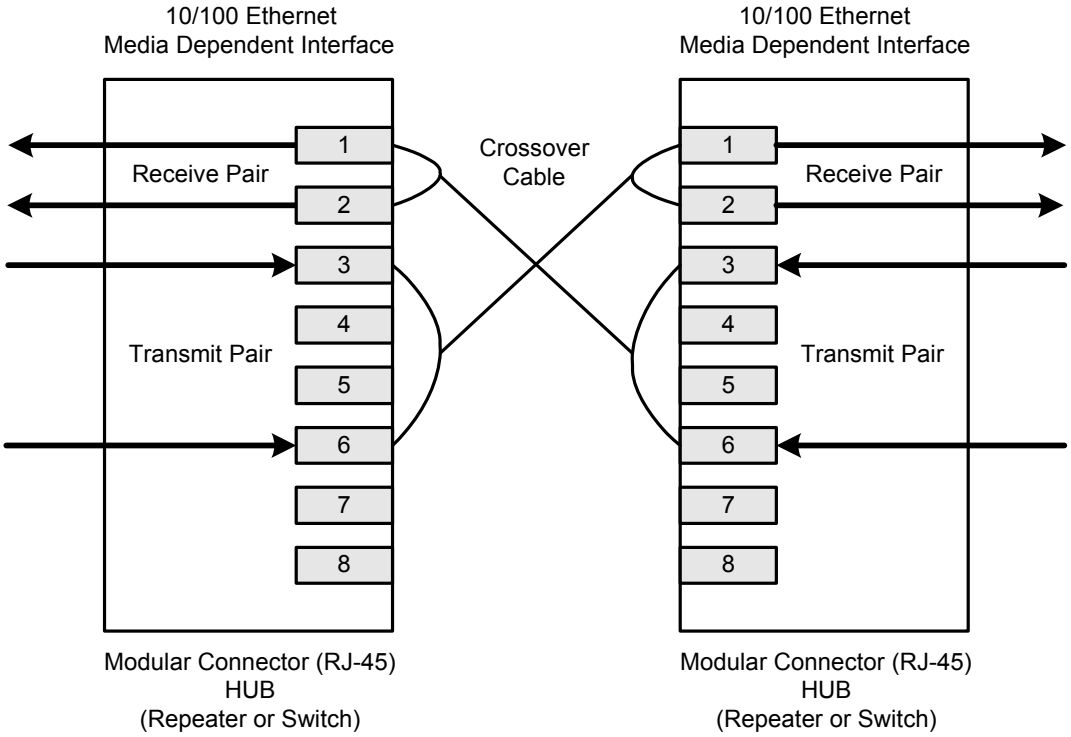

Figure 2. Typical Crossover Cable Connection

Downloaded from Arrow.com.

Auto-Negotiation

The KSZ8873MML conforms to the auto-negotiation protocol, defined in Clause 28 of the IEEE 802.3u specification.

Auto-negotiation allows unshielded twisted pair (UTP) link partners to select the best common mode of operation. In auto-negotiation, link partners advertise their capabilities across the link to each other. If auto-negotiation is not supported or the KSZ8873MML link partner is forced to bypass auto-negotiation, the KSZ8873MML sets its operating mode by observing the signal at its receiver. This is known as parallel detection, and allows the KSZ8873MML to establish link by listening for a fixed signal protocol in the absence of auto-negotiation advertisement protocol.

The link up process is shown in the following flow diagram.

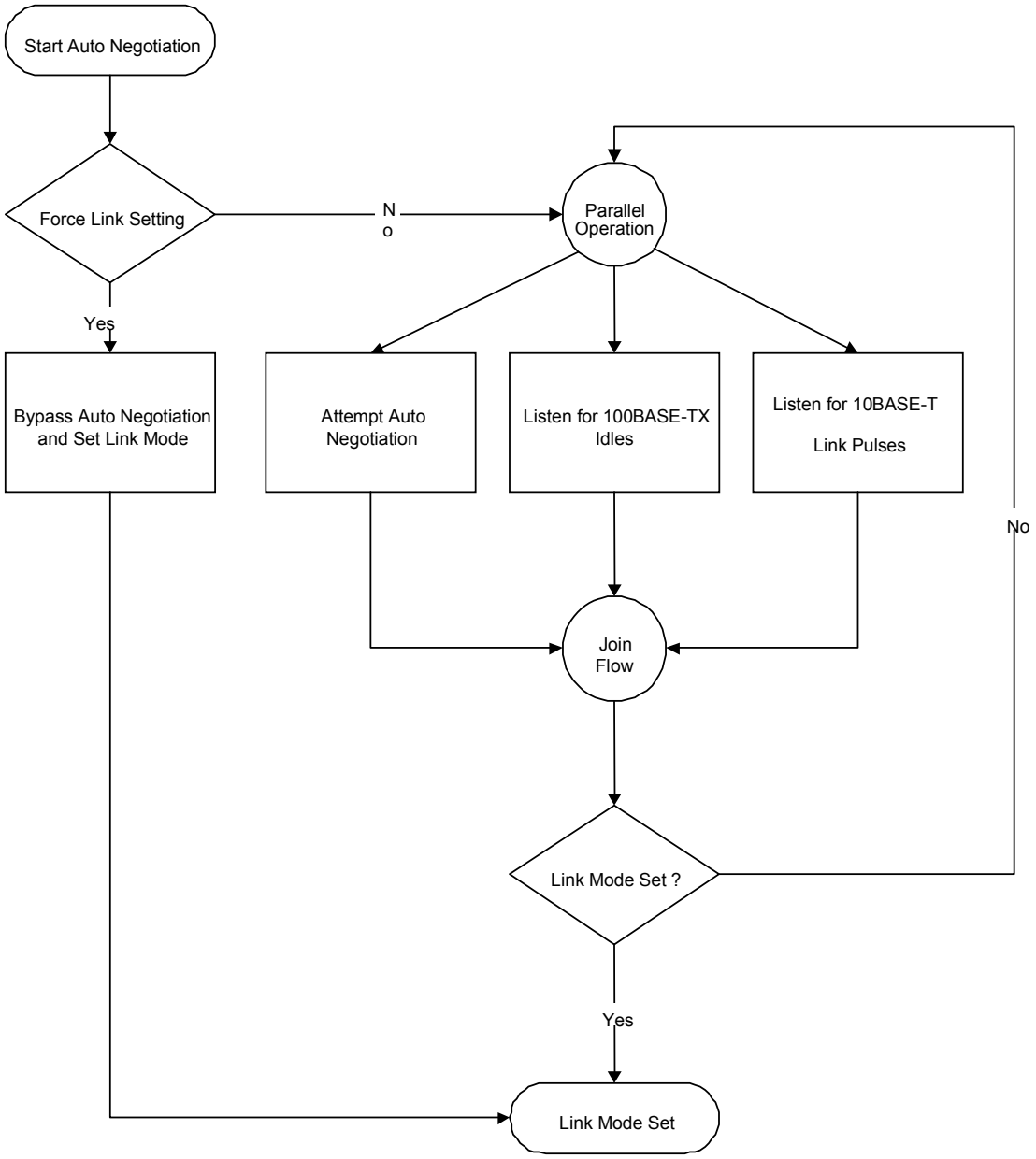

Figure 3. Auto-Negotiation and Parallel Operation

Downloaded from Arrow.com.

LinkMD® Cable Diagnostics

Port 2 of KSZ8873MML supports the LinkMD®. The LinkMD® feature utilizes time domain reflectometry (TDR) to analyze the cabling plant for common cabling problems such as open circuits, short circuits and impedance mismatches.

LinkMD® works by sending a pulse of known amplitude and duration down the MDI and MDI-X pairs and then analyzes the shape of the reflected signal. Timing the pulse duration gives an indication of the distance to the cabling fault. Internal circuitry displays the TDR information in a user-readable digital format.

Access

LinkMD® is initiated by accessing registers {42, 43}, the LinkMD® Control/Status registers for port 2, and in conjunction with registers 45, Port Control Register 13.

Alternatively, the MIIM PHY registers 0 and 29 can be used for LinkMD® access.

Usage

The following is a sample procedure for using LinkMD® with registers {42, 43, 45} on port 2.

1. Disable auto MDI/MDI-X by writing a ‘1’ to register 45, bit [2] to enable manual control over the differential pair used to transmit the LinkMD® pulse.
2. Start cable diagnostic test by writing a ‘1’ to register 42, bit [4]. This enable bit is self-clearing.
3. Wait (poll) for register 42, bit [4] to return a ‘0’, and indicating cable diagnostic test is completed.
4. Read cable diagnostic test results in register 42, bits [6:5]. The results are as follows:

   00 = normal condition (valid test)
   01 = open condition detected in cable (valid test)
   10 = short condition detected in cable (valid test)
   11 = cable diagnostic test failed (invalid test)

   The ‘11’ case, invalid test, occurs when the KSZ8873MML is unable to shut down the link partner. In this instance, the test is not run, since it would be impossible for the KSZ8873MML to determine if the detected signal is a reflection of the signal generated or a signal from another source.
5. Get distance to fault by concatenating register 42, bit [0] and register 43, bits [7:0]; and multiplying the result by a constant of 0.4. The distance to the cable fault can be determined by the following formula:

   D (distance to cable fault) = 0.4 x {(register 26, bit [0]),(register 27, bits [7:0])}

   D (distance to cable fault) is expressed in meters.

   Concatenated value of registers 42 and 43 is converted to decimal before multiplying by 0.4.

   The constant (0.4) may be calibrated for different cabling conditions, including cables with a velocity of propagation that varies significantly from the norm.

Downloaded from Arrow.com.

Functional Overview: Power Management

The KSZ8873MML supports enhanced power management feature in low power state with energy detection to ensure low-power dissipation during device idle periods. There are five operation modes under the power management function which is controlled by two bits in Register 195 (0xC3) and one bit in Register 29 (0x1D),45(0x2D) as shown below:

Register 195 bit[1:0] = 00 Normal Operation Mode

Register 195 bit[1:0] = 01 Energy Detect Mode

Register 195 bit[1:0] = 10 Soft Power Down Mode

Register 195 bit[1:0] = 11 Power Saving Mode

Table 3 indicates all internal function blocks status under four different power management operation modes.

KSZ8873MML Function Blocks	Power Management Operation Modes			
	Normal Mode	Power Saving Mode	Energy Detect Mode	Soft Power Down Mode
Internal PLL Clock	Enabled	Enabled	Disabled	Disabled
Tx/Rx PHY	Enabled	Rx unused block disabled	Energy detect at Rx	Disabled
MAC	Enabled	Enabled	Disabled	Disabled
Host Interface	Enabled	Enabled	Disabled	Disabled

Table 2. Internal Function Block Status

Normal Operation Mode

This is the default setting bit[1:0]=00 in register 195 after the chip power-up or hardware reset . When KSZ8873MML is in this normal operation mode, all PLL clocks are running, PHY and MAC are on and the host interface is ready for CPU read or write.

During the normal operation mode, the host CPU can set the bit[1:0] in register 195 to transit the current normal operation mode to any one of the other three power management operation modes.

Energy Detect Mode

The energy detect mode provides a mechanism to save more power than in the normal operation mode when the KSZ8873MML is not connected to an active link partner. In this mode, the device will save up to 87% of the power. If the cable is not plugged, the KSZ8873MML can automatically enter to a low power state, a.k.a., the energy detect mode. In this mode, KSZ8873MML will keep transmitting 120ns width pulses at 1 pulse/s rate. Once activity resumes due to plugging a cable or attempting by the far end to establish link, the KSZ8873MML can automatically power up to normal power state in energy detect mode.

Energy detect mode consists of two states, normal power state and low power state. While in low power state, the KSZ8873MML reduces power consumption by disabling all circuitry except the energy detect circuitry of the receiver. The energy detect mode is entered by setting bit[1:0]=01 in register 195. When the KSZ8873MML is in this mode, it will monitor the cable energy. If there is no energy on the cable for a time longer than pre-configured value at bit[7:0] Go-Sleep time in register 196, KSZ8873MML will go into a low power state. When KSZ8873MML is in low power state, it will keep monitoring the cable energy. Once the energy is detected from the cable, KSZ8873MML will enter normal power state. When KSZ8873MML is at normal power state, it is able to transmit or receive packet from the cable.

It will save about 87% of the power when MII interface is in PHY mode, pin SMTXER3/MII_LINK_3 or SMTXER1/MII_LINK_1 is connected to High, register 195 bit [1:0] =01, bit 2 =1(Disable PLL), not cables are connected.

Soft Power Down Mode

The soft power down mode is entered by setting bit[1:0]=10 in register 195. When KSZ8873MML is in this mode, all PLL clocks are disabled, the PHY and the MAC are off, all internal registers value will not change. When the host set bit[1:0]=00 in register 195, this device will be back from current soft power down mode to normal operation mode

Power Saving Mode

The power saving mode is entered when auto-negotiation mode is enabled, cable is disconnected, and by setting bit[1:0]=11 in register 195. When KSZ8873MML is in this mode, all PLL clocks are enabled, MAC is on, all internal

Downloaded from Arrow.com.

registers value will not change, and host interface is ready for CPU read or write. In this mode, it mainly controls the PHY transceiver on or off based on line status to achieve power saving. The PHY remains transmitting and only turns off the unused receiver block. Once activity resumes due to plugging a cable or attempting by the far end to establish link, the KSZ8873MML can automatically enabled the PHY power up to normal power state from power saving mode.

During this power saving mode, the host CPU can set bit[1:0] =0 in register 195 to transit the current power saving mode to any one of the other three power management operation modes.

Port based Power Down Mode

In addition, the KSZ8873MML features a per-port power down mode. To save power, a PHY port that is not in use can be powered down via port control register 45 bit 3, or MIIM PHY register. It will saves about 15mA per port.

Hardware Power Down

KSZ8873 supports a hardware power down mode. When the pin PWRDN is actived low, the entire chip is powered down.

Functional Overview: MAC and Switch

Address Lookup

The internal lookup table stores MAC addresses and their associated information. It contains a 1K unicast address table plus switching information.

The KSZ8873MML is guaranteed to learn 1K addresses and distinguishes itself from hash-based lookup tables, which depending on the operating environment and probabilities, may not guarantee the absolute number of addresses it can learn.

Learning

The internal lookup engine updates its table with a new entry if the following conditions are met:

1. The received packet's Source Address (SA) does not exist in the lookup table.
2. The received packet is good; the packet has no receiving errors, and is of legal length.

The lookup engine inserts the qualified SA into the table, along with the port number and time stamp. If the table is full, the last entry of the table is deleted to make room for the new entry.

Migration

The internal lookup engine also monitors whether a station has moved. If a station has moved, it will update the table accordingly. Migration happens when the following conditions are met:

1. The received packet's SA is in the table but the associated source port information is different.
2. The received packet is good; the packet has no receiving errors, and is of legal length.

The lookup engine will update the existing record in the table with the new source port information.

Aging

The lookup engine updates the time stamp information of a record whenever the corresponding SA appears. The time stamp is used in the aging process. If a record is not updated for a period of time, the lookup engine removes the record from the table. The lookup engine constantly performs the aging process and will continuously remove aging records. The aging period is about 200 seconds. This feature can be enabled or disabled through register 3 (0x03) bit [2].

Forwarding

The KSZ8873MML forwards packets using the algorithm that is depicted in the following flowcharts. Figure 4 shows stage one of the forwarding algorithm where the search engine looks up the VLAN ID, static table, and dynamic table for the destination address, and comes up with “port to forward 1” (PTF1). PTF1 is then further modified by spanning tree, IGMP snooping, port mirroring, and port VLAN processes to come up with “port to forward 2” (PTF2), as shown in Figure 5. The packet is sent to PTF2.

Downloaded from Arrow.com.

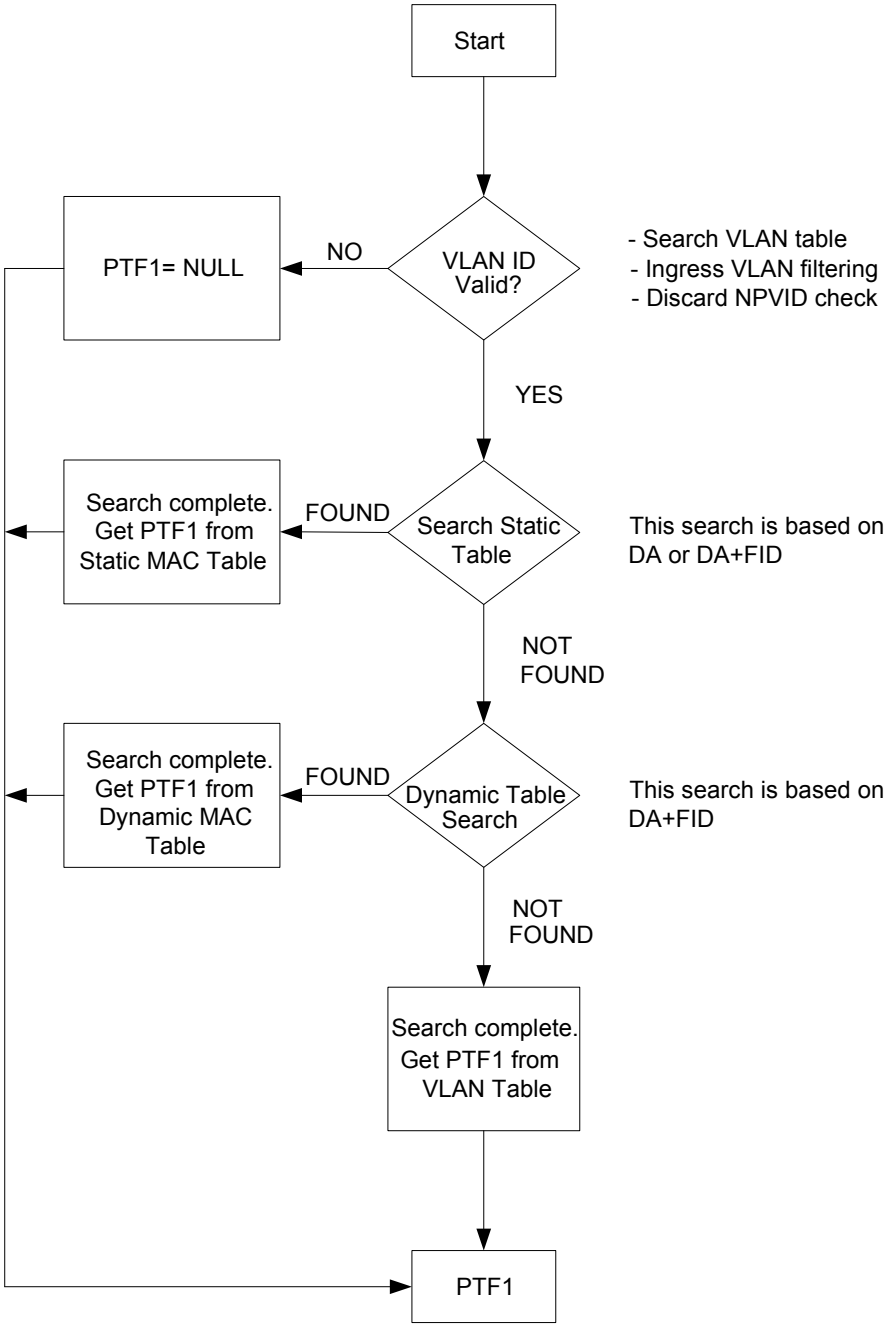

Figure 4. Destination Address Lookup Flow Chart, Stage 1

Downloaded from Arrow.com.

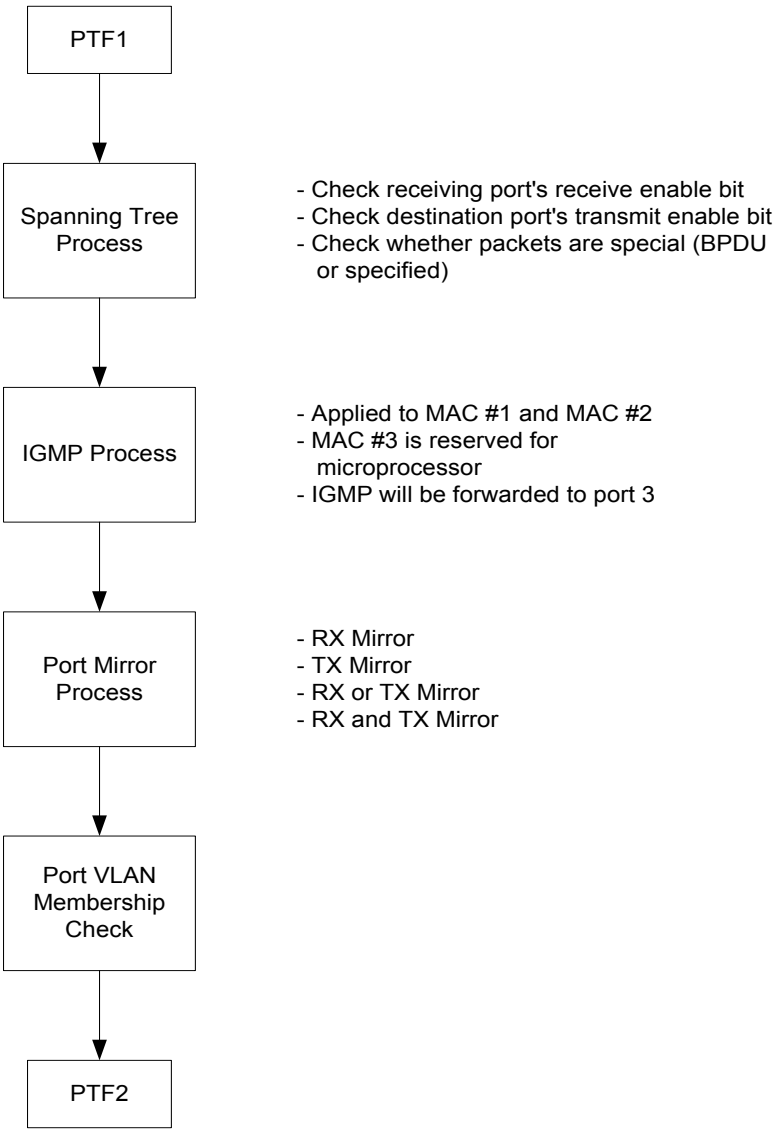

Figure 5. Destination Address Resolution Flow Chart, Stage 2

The KSZ8873MML will not forward the following packets:

1. Error packets

   These include framing errors, Frame Check Sequence (FCS) errors, alignment errors, and illegal size packet errors.

2. IEEE802.3x PAUSE frames

   KSZ8873MML intercepts these packets and performs full duplex flow control accordingly.

3. "Local" packets

   Based on destination address (DA) lookup. If the destination port from the lookup table matches the port from which the packet originated, the packet is defined as "local."

Downloaded from Arrow.com.

Switching Engine

The KSZ8873MML features a high-performance switching engine to move data to and from the MACs' packet buffers. It operates in store and forward mode, while the efficient switching mechanism reduces overall latency.

The switching engine has a 32kB internal frame buffer. This buffer pool is shared between all three ports. There are a total of 256 buffers available. Each buffer is sized at 128 bytes.

MAC Operation

The KSZ8873MML strictly abides by IEEE 802.3 standards to maximize compatibility.

Inter Packet Gap (IPG)

If a frame is successfully transmitted, the 96 bits time IPG is measured between the two consecutive MTXEN. If the current packet is experiencing collision, the 96 bits time IPG is measured from MCRS and the next MTXEN.

Back-Off Algorithm

The KSZ8873MML implements the IEEE 802.3 standard for the binary exponential back-off algorithm, and optional "aggressive mode" back-off. After 16 collisions, the packet is optionally dropped depending on the switch configuration for register 4 (0x04) bit [3].

Late Collision

If a transmit packet experiences collisions after 512 bit times of the transmission, the packet is dropped.

Illegal Frames

The KSZ8873MML discards frames less than 64 bytes, and can be programmed to accept frames up to1518 bytes, 1536 bytes or 1916 bytes. These maximum frame size settings are programmed in register 4 (0x04). Since the KSZ8873MML supports VLAN tags, the maximum sizing is adjusted when these tags are present.

Full Duplex Flow Control

The KSZ8873MML supports standard IEEE 802.3x flow control frames on both transmit and receive sides.

On the receive side, if the KSZ8873MML receives a pause control frame, the KSZ8873MML will not transmit the next normal frame until the timer, specified in the pause control frame, expires. If another pause frame is received before the current timer expires, the timer will be updated with the new value in the second pause frame. During this period (while it is flow controlled), only flow control packets from the KSZ8873MML are transmitted.

On the transmit side, the KSZ8873MML has intelligent and efficient ways to determine when to invoke flow control. The flow control is based on availability of the system resources, including available buffers, available transmit queues and available receive queues.

The KSZ8873MML will flow control a port that has just received a packet if the destination port resource is busy. The KSZ8873MML issues a flow control frame (XOFF), containing the maximum pause time defined by the IEEE 802.3x standard. Once the resource is freed up, the KSZ8873MML sends out the other flow control frame (XON) with zero pause time to turn off the flow control (turn on transmission to the port). A hysteresis feature is provided to prevent the flow control mechanism from being constantly activated and deactivated.

The KSZ8873MML flow controls all ports if the receive queue becomes full.

Half-Duplex Backpressure

A half-duplex backpressure option (not in IEEE 802.3 standards) is also provided. The activation and deactivation conditions are the same as full duplex flow control. If backpressure is required, the KSZ8873MML sends preambles to defer the other stations' transmission (carrier sense deference).

To avoid jabber and excessive deference (as defined in the 802.3 standard), after a certain time, the KSZ8873MML discontinues the carrier sense and then raises it again quickly. This short silent time (no carrier sense) prevents other stations from sending out packets thus keeping other stations in a carrier sense deferred state. If the port has packets to send during a backpressure situation, the carrier sense type backpressure is interrupted and those packets are transmitted instead. If there are no additional packets to send, carrier sense type backpressure is reactivated again until switch resources free up. If a collision occurs, the binary exponential back-off algorithm is skipped and carrier sense is generated immediately, thus reducing the chance of further collisions and carrier sense is maintained to prevent packet reception.

Downloaded from Arrow.com.

To ensure no packet loss in 10 BASE-T or 100 BASE-TX half duplex modes, the user must enable the following:

1. Aggressive back-off (register 3 (0x03), bit [0])
2. No excessive collision drop (register 4 (0x04), bit [3])

Note: These bits are not set as defaults, as this is not the IEEE standard.

Broadcast Storm Protection

The KSZ8873MML has an intelligent option to protect the switch system from receiving too many broadcast packets. As the broadcast packets are forwarded to all ports except the source port, an excessive number of switch resources (bandwidth and available space in transmit queues) may be utilized. The KSZ8873MML has the option to include "multicast packets" for storm control. The broadcast storm rate parameters are programmed globally, and can be enabled or disabled on a per port basis. The rate is based on a 67ms interval for 100BT and a 500ms interval for 10BT. At the beginning of each interval, the counter is cleared to zero, and the rate limit mechanism starts to count the number of bytes during the interval. The rate definition is described in register 6 (0x06) and 7 (0x07). The default setting is 0x63 (99 decimal). This is equal to a rate of 1%, calculated as follows:

148,800 frames/sec * 67ms/interval * 1% = 99 frames/interval (approx.) = 0x63

Note: 148,800 frames/sec is based on 64-byte block of packets in 100BASE-TX with 12 bytes of IPG and 8 bytes of preamble between two packets.

Self-Address Filtering

The KSZ8873MML provide individual MAC address for port 1 and port 2 respectively. They can be set at register 142-147 and 148-153. The packet will be filtered if its source address matches the MAC address of port 1 or port 2 when the register 21 and 37 bit 6 is set to 1 respectively. For example, the packet will be dropped after it completes the loop of a ring network.

Note: For KSZ8873MML, port 1 means port 1's MII and an external PHY here.

MII Interface Operation

The Media Independent Interface (MII) is specified in Clause 22 of the IEEE 802.3u Standard. It provides a common interface between physical layer and MAC layer devices. The MII provided by the KSZ8873MML is connected to the device's third MAC. The interface contains two distinct groups of signals: one for transmission and the other for reception. The following table describes the signals used by the MII bus.

Downloaded from Arrow.com.

PHY-Mode Connections			MAC-Mode Connections	
External MAC Controller Signals	**KSZ8873MML PHY Signals**	**Pin Descriptions**	**External PHY Signals**	**KSZ8873MML MAC Signals**
MTXEN	SMTXEN	Transmit enable	MTXEN	SMRXDV
MTXER	SMTXER	Transmit error	MTXER	(not used)
MTXD3	SMTXD3	Transmit data bit 3	MTXD3	SMRXD3
MTXD2	SMTXD2	Transmit data bit 2	MTXD2	SMRXD2
MTXD1	SMTXD1	Transmit data bit 1	MTXD1	SMRXD1
MTXD0	SMTXD0	Transmit data bit 0	MTXD0	SMRXD0
MTXC	SMTXC	Transmit clock	MTXC	SMRXC
MCOL	SCOL	Collision detection	MCOL	SCOL
MCRS	SCRS	Carrier sense	MCRS	SCRS
MRXDV	SMRXDV	Receive data valid	MRXDV	SMTXEN
MRXER	(not used)	Receive error	MRXER	SMTXER
MRXD3	SMRXD	Receive data bit 3	MRXD3	SMTXD3
MRXD2	SMRXD2	Receive data bit 2	MRXD2	SMTXD2
MRXD1	SMRXD1	Receive data bit 1	MRXD1	SMTXD1
MRXD0	SMRXD0	Receive data bit 0	MRXD0	SMTXD0
MRXC	SMRXC	Receive clock	MRXC	SMTXC

Table 3. MII Signals

The MII operates in either PHY mode or MAC mode. The data interface is a nibble wide and runs at ¼ the network bit rate (not encoded). Additional signals on the transmit side indicate when data is valid or when an error occurs during transmission. Similarly, the receive side has signals that convey when the data is valid and without physical layer errors. For half duplex operation, the SCOL signal indicates if a collision has occurred during transmission. The selection of the PHY mode and MAC mode for port3 MII is by the strap pin SMRXDV3 and the port register 53 bit 7. The selection of the PHY mode and MAC mode for port1 MII is by the strap pin SMRXD13 and the port register 21bit 7.

The KSZ8873MML does not provide the MRXER signal for PHY mode operation and the MTXER signal for MAC mode operation. Normally, MRXER indicates a receive error coming from the physical layer device and MTXER indicates a transmit error from the MAC device. Since the switch filters error frames, these MII error signals are not used by the KSZ8873MML. So, for PHY mode operation, if the device interfacing with the KSZ8873MML has an MRXER input pin, it needs to be tied low. And, for MAC mode operation, if the device interfacing with the KSZ8873MML has an MTXER input pin, it also needs to be tied low.

The KSZ8873MML provides a bypass feature in the MII PHY mode. Pin SMTXER3/MII_LINK is used for MII link status. If the host is power down, pin MII_LINK will go to high. In this case, no new ingress frames from port1 or port 2 will be sent out through port 3, and the frames for port 3 already in packet memory will be flushed out.

MII Management (MIIM) Interface

The KSZ8873MML supports the IEEE 802.3 MII Management Interface, also known as the Management Data Input/Output (MDIO) Interface. This interface allows upper-layer devices to monitor and control the states of the KSZ8873MML. An external device with MDC/MDIO capability is used to read the PHY status or configure the PHY settings. Further detail on the MIIM interface is found in Clause 22.2.4.5 of the IEEE 802.3u Specification and refer to 802.3 section 22.3.4 for the timing.

The MIIM interface consists of the following:

- A physical connection that incorporates the data line (SDA_MDIO) and the clock line (SCL_MDC).
- A specific protocol that operates across the aforementioned physical connection that allows an external controller to communicate with the KSZ8873MML device.
- Access to a set of eight 16-bit registers, consisting of six standard MIIM registers [0:5] and two custom MIIM

Downloaded from Arrow.com.

registers [29, 31].

The MIIM Interface can operate up to a maximum clock speed of 5MHz.

The following table depicts the MII Management Interface frame format.

	Preamble	Start of Frame	Read/Write OP Code	PHY Address Bits [4:0]	REG Address Bits [4:0]	TA	Data Bits [15:0]	Idle
Read	32 1's	01	10	AAAAA	RRRRR	Z0	DDDDDDDD_DDDDDDDD	Z
Write	32 1's	01	01	AAAAA	RRRRR	10	DDDDDDDD_DDDDDDDD	Z

Table 4. MII Management Interface Frame Format

Serial Management Interface (SMI)

The SMI is the KSZ8873MML non-standard MIIM interface that provides access to all KSZ8873MML configuration registers. This interface allows an external device to completely monitor and control the states of the KSZ8873MML.

The SMI interface consists of the following:

- A physical connection that incorporates the data line (SDA_MDIO) and the clock line (SCL_MDC).
- A specific protocol that operates across the aforementioned physical connection that allows an external controller to communicate with the KSZ8873MML device.
- Access to all KSZ8873MML configuration registers. Register access includes the Global, Port and Advanced Control Registers 0-198 (0x00 – 0xC6), and indirect access to the standard MIIM registers [0:5] and custom MIIM registers [29, 31].

Downloaded from Arrow.com.

The following table depicts the SMI frame format.

	Preamble	Start of Frame	Read/Write OP Code	PHY Address Bits [4:0]	REG Address Bits [4:0]	TA	Data Bits [15:0]	Idle
Read	32 1's	01	00	1xRRR	RRRRR	Z0	0000_0000_DDDD_DDDD	Z
Write	32 1's	01	00	0xRRR	RRRRR	10	xxxx_xxxx_DDDD_DDDD	Z

Table 5. Serial Management Interface (SMI) Frame Format

SMI register read access is selected when OP Code is set to "00" and bit 4 of the PHY address is set to '1'. SMI register write access is selected when OP Code is set to "00" and bit 4 of the PHY address is set to '0'. PHY address bit[3] is undefined for SMI register access, and hence can be set to either '0' or '1' in read/write operations.

To access the KSZ8873MLL/FLL/RLL registers 0-196 (0x00 – 0xC6), the following applies:

- PHYAD[2:0] and REGAD[4:0] are concatenated to form the 8-bit address; that is, {PHYAD[2:0], REGAD[4:0]} = bits [7:0] of the 8-bit address.
- TA bits [1:0] are 'Z0' means the processor MDIO pin is changed to input Hi-Z from output mode and the followed '0' is the read response from device.
- TA bits [1:0] are set to '10' when write registers.
- Registers are 8 data bits wide.

  For read operation, data bits [15:8] are read back as 0's.

  For write operation, data bits [15:8] are not defined, and hence can be set to either '0' or '1'.

SMI register access is the same as the MIIM register access, except for the register access requirements presented in this section.

Downloaded from Arrow.com.

Advanced Switch Functions

Bypass Mode

The KSZ8873MML also offer a by-pass mode which enables system-level power saving. When the CPU (connected to port3 or port1) enters a power saving mode of power down or sleeping mode, the CPU can control the pin 27 SMTXER3/MII_LINK_3 or pin 51 SMTXER1/MII_LINK_1 which can be tied high so that the KSZ8873MML detect this change and automatically switches to the by-pass mode in which the switch function between Port2 and port3/port1 is sustained. In the by-pass mode, the packets with DA to port 3 or port1 will be dropped and by pass the internal buffer memory, make the buffer memory more efficiency for the data transfer. Specially, the power saving get more in energy detect mode with the by-pass to be used.

IEEE 802.1Q VLAN Support

The KSZ8873MML supports 16 active VLANs out of the 4096 possible VLANs specified in the IEEE 802.1Q specification. KSZ8873MML provides a 16-entry VLAN Table, which converts the 12-bits VLAN ID (VID) to the 4-bits Filter ID (FID) for address lookup. If a non-tagged or null-VID-tagged packet is received, the ingress port default VID is used for lookup. In VLAN mode, the lookup process starts with VLAN Table lookup to determine whether the VID is valid. If the VID is not valid, the packet is dropped and its address is not learned. If the VID is valid, the FID is retrieved for further lookup. The FID + Destination Address (FID+DA) are used to determine the destination port. The FID + Source Address (FID+SA) are used for address learning.

DA found in Static MAC Table?	Use FID Flag?	FID Match?	DA+FID found in Dynamic MAC Table?	Action
No	Don’t care	Don’t care	No	Broadcast to the membership ports defined in the *VLAN Table* bits [18:16]
No	Don’t care	Don’t care	Yes	Send to the destination port defined in the *Dynamic MAC Address Table* bits [53:52]
Yes	0	Don’t care	Don’t care	Send to the destination port(s) defined in the *Static MAC Address Table* bits [50:48]
Yes	1	No	No	Broadcast to the membership ports defined in the *VLAN Tabl*e bits [18:16]
Yes	1	No	Yes	Send to the destination port defined in the *Dynamic MAC Address Table* bits [53:52]
Yes	1	Yes	Don’t care	Send to the destination port(s) defined in the *Static MAC Address Table* bits [50:48]

Table 6. FID+DA Lookup in VLAN Mode

Downloaded from Arrow.com.

FID+SA found in Dynamic MAC Table?	Action
No	Learn and add FID+SA to the Dynamic MAC Address Table
Yes	Update time stamp

Table 7. FID+SA Lookup in VLAN Mode

Advanced VLAN features, such as “Ingress VLAN filtering” and “Discard Non PVID packets” are also supported by the KSZ8873MML. These features can be set on a per port basis, and are defined in register 18, 34 and 50 for ports 1, 2 and 3, respectively.

QoS Priority Support

The KSZ8873MML provides Quality of Service (QoS) for applications such as VoIP and video conferencing. Offering four priority queues per port, the per-port transmit queue can be split into four priority queues: Queue 3 is the highest priority queue and Queue 0 is the lowest priority queue. Bit [0] of registers 16, 32 and 48 is used to enable split transmit queues for ports 1, 2 and 3, respectively. If a port's transmit queue is not split, high priority and low priority packets have equal priority in the transmit queue.

There is an additional option to either always deliver high priority packets first or use weighted fair queuing for the four priority queues. This global option is set and explained in bit [3] of register 5.

Port-Based Priority

With port-based priority, each ingress port is individually classified as a high priority receiving port. All packets received at the high priority receiving port are marked as high priority and are sent to the high-priority transmit queue if the corresponding transmit queue is split. Bits [4:3] of registers 16, 32 and 48 are used to enable port-based priority for ports 1, 2 and 3, respectively.

802.1p-Based Priority

For 802.1p-based priority, the KSZ8873MML examines the ingress (incoming) packets to determine whether they are tagged. If tagged, the 3-bit priority field in the VLAN tag is retrieved and compared against the “priority mapping” value, as specified by the registers 12 and 13. The “priority mapping” value is programmable.

The following figure illustrates how the 802.1p priority field is embedded in the 802.1Q VLAN tag.

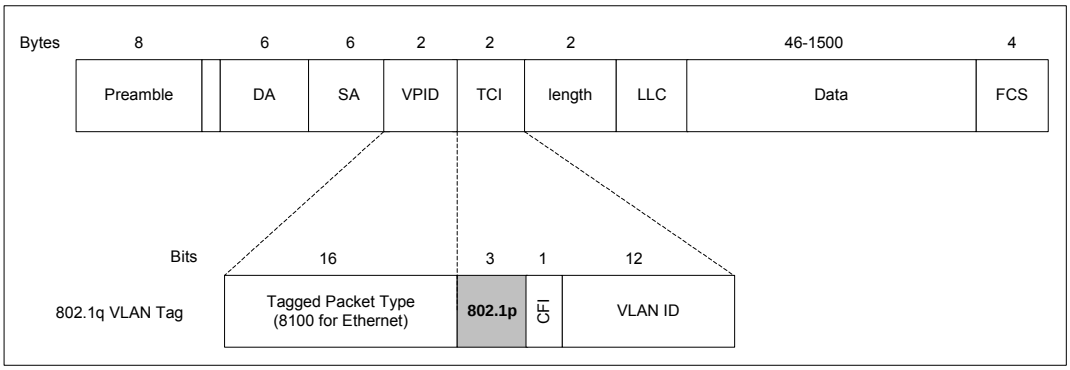

Figure 6. 802.1p Priority Field Format

802.1p-based priority is enabled by bit [5] of registers 16, 32 and 48 for ports 1, 2 and 3, respectively.

The KSZ8873MML provides the option to insert or remove the priority tagged frame's header at each individual egress port. This header, consisting of the 2 bytes VLAN Protocol ID (VPID) and the 2-byte Tag Control Information field (TCI), is also referred to as the IEEE 802.1Q VLAN tag.

Tag Insertion is enabled by bit [2] of the port registers control 0 and the register 194 to select which source port (ingress port) PVID can be inserted on the egress port for ports 1, 2 and 3, respectively. At the egress port, untagged packets are tagged with the ingress port’s default tag. The default tags are programmed in register sets {19,20}, {35,36} and {51,52} for ports 1, 2 and 3, respectively and the source port VID has to be inserted at selected egress ports by bit[5:0] of register

Downloaded from Arrow.com.

194. The KSZ8873MML will not add tags to already tagged packets.

Tag Removal is enabled by bit [1] of registers 16, 32 and 48 for ports 1, 2 and 3, respectively. At the egress port, tagged packets will have their 802.1Q VLAN Tags removed. The KSZ8873MML will not modify untagged packets.

The CRC is recalculated for both tag insertion and tag removal.

802.1p Priority Field Re-mapping is a QoS feature that allows the KSZ8873MML to set the "User Priority Ceiling" at any ingress port. If the ingress packet's priority field has a higher priority value than the default tag's priority field of the ingress port, the packet's priority field is replaced with the default tag's priority field.

DiffServ-Based Priority

DiffServ-based priority uses the ToS registers (registers 96 to 111) in the Advanced Control Registers section. The ToS priority control registers implement a fully decoded, 64-bit Differentiated Services Code Point (DSCP) register to determine packet priority from the 6-bit ToS field in the IP header. When the most significant 6 bits of the ToS field are fully decoded, the resultant of the 64 possibilities is compared with the corresponding bits in the DSCP register to determine priority.

Spanning Tree Support

To support spanning tree, port 3 is designated as the processor port.

The other ports (port 1 and port 2) can be configured in one of the five spanning tree states via "transmit enable", "receive enable" and "learning disable" register settings in registers 18 and 34 for ports 1 and 2, respectively. The following table shows the port setting and software actions taken for each of the five spanning tree states.

Disable State	**Port Setting**	**Software Action**
The port should not forward or receive any packets. Learning is disabled.	"transmit enable = 0, receive enable = 0, learning disable =1"	The processor should not send any packets to the port. The switch may still send specific packets to the processor (packets that match some entries in the "static MAC table" with "overriding bit" set) and the processor should discard those packets. Address learning is disabled on the port in this state.
Blocking State	**Port Setting**	**Software Action**
Only packets to the processor are forwarded. Learning is disabled.	"transmit enable = 0, receive enable = 0, learning disable =1"	The processor should not send any packets to the port(s) in this state. The processor should program the "Static MAC table" with the entries that it needs to receive (for example, BPDU packets). The "overriding" bit should also be set so that the switch will forward those specific packets to the processor. Address learning is disabled on the port in this state.
Listening State	**Port Setting**	**Software Action**
Only packets to and from the processor are forwarded. Learning is disabled.	"transmit enable = 0, receive enable = 0, learning disable =1"	The processor should program the "Static MAC table" with the entries that it needs to receive (for example, BPDU packets). The "overriding" bit should be set so that the switch will forward those specific packets to the processor. The processor may send packets to the port(s) in this state. See "Tail Tagging Mode" for details. Address learning is disabled on the port in this state.
Learning State	**Port Setting**	**Software Action**
Only packets to and from the processor are forwarded. Learning is enabled.	"transmit enable = 0, receive enable = 0, learning disable = 0"	The processor should program the "Static MAC table" with the entries that it needs to receive (for example, BPDU packets). The "overriding" bit should be set so that the switch will forward those specific packets to the processor. The processor may send packets to the port(s) in this state. See "Tail Tagging Mode" for details. Address learning is enabled on the port in this state.
Forwarding State	**Port Setting**	**Software Action**
Packets are forwarded and received normally. Learning is enabled.	"transmit enable = 1, receive enable = 1, learning disable = 0"	The processor programs the "Static MAC table" with the entries that it needs to receive (for example, BPDU packets). The "overriding" bit is set so that the switch forwards those specific packets to the processor. The processor can send packets to the port(s) in this state. See "Tail Tagging Mode" for details. Address learning is enabled on the port in this state.

Table 8. Spanning Tree States

Downloaded from Arrow.com.

Rapid Spanning Tree Support

There are three operational states of the Discarding, Learning, and Forwarding assigned to each port for RSTP:

Discarding ports do not participate in the active topology and do not learn MAC addresses.

Discarding state: the state includs three states of the disable, blocking and listening of STP.

Port setting: "transmit enable = 0, receive enable = 0, learning disable = 1."

Software action: the processor should not send any packets to the port. The switch may still send specific packets to the processor (packets that match some entries in the static table with “overriding bit” set) and the processor should discard those packets. When disable the port’s learning capability (learning disable=’1’), set the register 2 bit 5 and bit 4 will flush rapidly the port related entries in the dynamic MAC table and static MAC table.

Note: processor is connected to port 3 via MII interface. Address learning is disabled on the port in this state.

Ports in Learning states learn MAC addresses, but do not forward user traffic.

Learning state: only packets to and from the processor are forwarded. Learning is enabled.

Port setting: “transmit enable = 0, receive enable = 0, learning disable = 0.”

Software action: The processor should program the static MAC table with the entries that it needs to receive (e.g., BPDU packets). The “overriding” bit should be set so that the switch will forward those specific packets to the processor. The processor may send packets to the port(s) in this state, see “Tail Tagging Mode” section for details. Address learning is enabled on the port in this state.

Ports in Forwarding states fully participate in both data forwarding and MAC learning.

Forwarding state: packets are forwarded and received normally. Learning is enabled.

Port setting: “transmit enable = 1, receive enable = 1, learning disable = 0.”

Software action: The processor should program the static MAC table with the entries that it needs to receive (e.g., BPDU packets). The “overriding” bit should be set so that the switch will forward those specific packets to the processor. The processor may send packets to the port(s) in this state, see “Tail Tagging Mode” section for details. Address learning is enabled on the port in this state.

RSTP uses only one type of BPDU called RSTP BPDUs. They are similar to STP Configuration BPDUs with the exception of a type field set to “version 2” for RSTP and “version 0” for STP, and a flag field carrying additional information.

Tail Tagging Mode

The Tail Tag is only seen and used by the port 3 interface, which should be connected to a processor. It is an effective way to retrieve the ingress port information for spanning tree protocol IGMP snooping and other applications. The Bit 1 and bit 0 in the one byte tail tagging is used to indicate the source/destination port in port 3. Bit 3 and bit 2 are used for the priority setting of the ingress frame in port 3. Other bits are not used. The Tail Tag feature is enabled by setting register 3 bit 6.

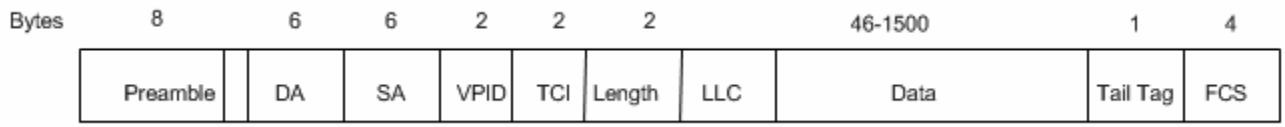

Figure 7. Tail Tag Frame Format

Downloaded from Arrow.com.

Ingress to Port 3 (Host -> KSZ8873MML)	
Bit [1,0]	**Destination Port**
0,0	Normal (Address Look up)
0,1	Port 1
1,0	Port 2
1,1	Port 1 and 2
Bit [3,2]	**Frame Priority**
0,0	Priority 0
0,1	Priority 1
1,0	Priority 2
1,1	Priority 3
Egress from Port 3 (KSZ8873MML->Host)	
Bit [0]	**Source Port**
0	Port 1
1	Port 2

Figure 8. Tail Tag Rules

IGMP Support

For Internet Group Management Protocol (IGMP) support in layer 2, the KSZ8873MML provides two components:

IGMP Snooping

The KSZ8873MLL/FLL/RLL traps IGMP packets and forwards them only to the processor (port 3). The IGMP packets are identified as IP packets (either Ethernet IP packets, or IEEE 802.3 SNAP IP packets) with IP version = 0x4 and protocol version number = 0x2.

IGMP Send Back to the Subscribed Port

Once the host responds the received IGMP packet, the host should knows the original IGMP ingress port and send back the IGMP packet to this port only, otherwise this IGMP packet will be broadcasted to all port to downgrade the performance.

Enable the tail tag mode, the host will know the IGMP packet received port from tail tag bits [0] and can send back the response IGMP packet to this subscribed port by setting the bits [1,0] in the tail tag. Enable “Tail tag mode” by setting Register 3 bit 6. The tail tag will be removed automatically when the IGMP packet is sent out from the subscribed port.

Port Mirroring Support

KSZ8873MML supports “Port Mirroring” comprehensively as:

“receive only” mirror on a port

All the packets received on the port are mirrored on the sniffer port. For example, port 1 is programmed to be “receive sniff” and port 3 is programmed to be the “sniffer port”. A packet received on port 1 is destined to port 2 after the internal lookup. The KSZ8873MML forwards the packet to both port 2 and port 3. The KSZ8873MML can optionally even forward “bad” received packets to the “sniffer port”.

“transmit only” mirror on a port

All the packets transmitted on the port are mirrored on the sniffer port. For example, port 1 is programmed to be “transmit sniff” and port 3 is programmed to be the “sniffer port”. A packet received on port 2 is destined to port 1 after the internal lookup. The KSZ8873MML forwards the packet to both port 1 and port 3.

“receive and transmit” mirror on two ports

All the packets received on port A and transmitted on port B are mirrored on the sniffer port. To turn on the “AND” feature, set register 5 bit [0] to ‘1’. For example, port 1 is programmed to be “receive sniff”, port 2 is programmed to be “transmit sniff”, and port 3 is programmed to be the “sniffer port”. A packet received on port 1 is destined to

Downloaded from Arrow.com.

port 2 after the internal lookup. The KSZ8873MML forwards the packet to both port 2 and port 3.

Multiple ports can be selected as “receive sniff” or “transmit sniff”. In addition, any port can be selected as the “sniffer port”. All these per port features can be selected through registers 17, 33 and 49 for ports 1, 2 and 3, respectively.

Rate Limiting Support

The KSZ8873MML provides a fine resolution hardware rate limiting from 64 Kbps to 99 Mbps. The rate step is 64Kbps when the rate range is from 64Kbps to 960Kbps and 1Mbps for 1Mbps to 100Mbps(100BT) or to 10Mbps(10BT) (refer to Data Rate Selection Table in “KSZ8873 Family Register Description”). The rate limit is independently on the “receive side” and on the “transmit side” on a per port basis. For 10BASE-T, a rate setting above 10 Mbps means the rate is not limited. On the receive side, the data receive rate for each priority at each port can be limited by setting up Ingress Rate Control Registers. On the transmit side, the data transmit rate for each priority queue at each port can be limited by setting up Egress Rate Control Registers. The size of each frame has options to include minimum IFG (Inter Frame Gap) or Preamble byte, in addition to the data field (from packet DA to FCS).

For ingress rate limiting, KSZ8873MML provides options to selectively choose frames from all types, multicast, broadcast, and flooded unicast frames. The KSZ8873MML counts the data rate from those selected type of frames. Packets are dropped at the ingress port when the data rate exceeds the specified rate limit.

For egress rate limiting, the Leaky Bucket algorithm is applied to each output priority queue for shaping output traffic. Inter frame gap is stretched on a per frame base to generate smooth, non-burst egress traffic. The throughput of each output priority queue is limited by the egress rate specified.

If any egress queue receives more traffic than the specified egress rate throughput, packets may be accumulated in the output queue and packet memory. After the memory of the queue or the port is used up, packet dropping or flow control will be triggered. As a result of congestion, the actual egress rate may be dominated by flow control/dropping at the ingress end, and may be therefore slightly less than the specified egress rate.

To reduce congestion, it is a good practice to make sure the egress bandwidth exceeds the ingress bandwidth.

Unicast MAC Address Filtering

The unicast MAC address filtering function works in conjunction with the static MAC address table. First, the static MAC address table is used to assign a dedicated MAC address to a specific port. If a unicast MAC address is not recorded in the static table, it is also not learned in the dynamic MAC table. The KSZ8873MML is then configured with the option to either filter or forward unicast packets for an unknown MAC address. This option is enabled and configured in register 14.

This function is useful in preventing the broadcast of unicast packets that could degrade the quality of the port in applications such as voice over Internet Protocol (VoIP).

Configuration Interface

The KSZ8873MML can operate as both a managed switch and an unmanaged switch.

In unmanaged mode, the KSZ8873MML is typically programmed using an EEPROM. If no EEPROM is present, the KSZ8873MML is configured using its default register settings. Some default settings are configured via strap-in pin options. The strap-in pins are indicated in the “KSZ8873MML Pin Description and I/O Assignment” table.

I^2C Master Serial Bus Configuration

With an additional I^2C (“2-wire”) EEPROM, the KSZ8873MML can perform more advanced switch features like “broadcast storm protection” and “rate control” without the need of an external processor.

For KSZ8873MML I^2C Master configuration, the EEPROM stores the configuration data for register 0 to register 120 (as defined in the KSZ8873MML register map) with the exception of the “Read Only” status registers. After the de-assertion of reset, the KSZ8873MML sequentially reads in the configuration data for all control registers, starting from register 0.

Downloaded from Arrow.com.

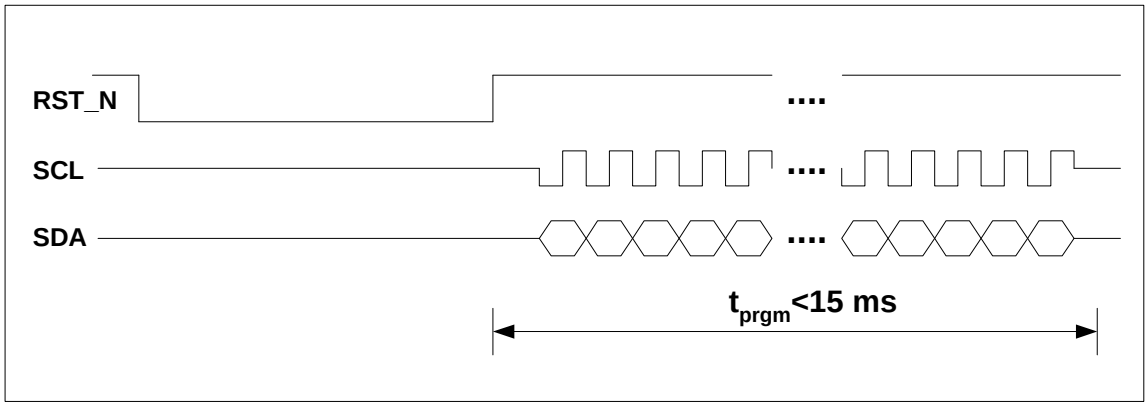

Figure 9. EEPROM Configuration Timing Diagram

The following is a sample procedure for programming the KSZ8873MML with a pre-configured EEPROM:

1. Connect the KSZ8873MML to the EEPROM by joining the SCL and SDA signals of the respective devices.
2. Enable I^2C master mode by setting the KSZ8873MML strap-in pins, P2LED[1:0] to “00”.
3. Check to ensure that the KSZ8873MML reset signal input, RSTN, is properly connected to the external reset source at the board level.
4. Program the desired configuration data into the EEPROM.
5. Place the EEPROM on the board and power up the board.
6. Assert an active-low reset to the RSTN pin of the KSZ8873MML. After reset is de-asserted, the KSZ8873MML begins reading the configuration data from the EEPROM. The KSZ8873MML checks that the first byte read from the EEPROM is “88”. If this value is correct, EEPROM configuration continues. If not, EEPROM configuration access is denied and all other data sent from the EEPROM is ignored by the KSZ8873MML.

Note: For proper operation, check to ensure that the KSZ8873MML PWRDN input signal is not asserted during the reset operation. The PWRDN input is active low.

I^2C Slave Serial Bus Configuration

In managed mode, the KSZ8873MML can be configured as an I^2C slave device. In this mode, an I^2C master device (external controller/CPU) has complete programming access to the KSZ8873MML’s 198 registers. Programming access includes the Global Registers, Port Registers, Advanced Control Registers and indirect access to the “Static MAC Table”, “VLAN Table”, “Dynamic MAC Table,” and “MIB Counters.” The tables and counters are indirectly accessed via registers 121 to 131.

In I^2C slave mode, the KSZ8873MML operates like other I^2C slave devices. Addressing the KSZ8873MML’s 8-bit registers is similar to addressing Atmel’s AT24C02 EEPROM’s memory locations. Details of I^2C read/write operations and related timing information can be found in the AT24C02 Datasheet.

Two fixed 8-bit device addresses are used to address the KSZ8873MML in I^2C slave mode. One is for read; the other is for write. The addresses are as follow:

1011_1111 <read>
1011_1110 <write>

The following is a sample procedure for programming the KSZ8873MML using the I^2C slave serial bus:

1. Enable I^2C slave mode by setting the KSZ8873MML strap-in pins P2LED[1:0] to “01”.
2. Power up the board and assert reset to the KSZ8873MML.
3. Configure the desired register settings in the KSZ8873MML, using the I^2C write operation.
4. Read back and verify the register settings in the KSZ8873MML, using the I^2C read operation.

Downloaded from Arrow.com.

Some of the configuration settings, such as “Aging enable”, “Auto Negotiation Enable”, “Force Speed” and “Power down” can be programmed after the switch has been started.

SPI Slave Serial Bus Configuration

In managed mode, the KSZ8873MML can be configured as a SPI slave device. In this mode, a SPI master device (external controller/CPU) has complete programming access to the KSZ8873MML’s 198 registers. Programming access includes the Global Registers, Port Registers, Advanced Control Registers and indirect access to the “Static MAC Table”, “VLAN Table”, “Dynamic MAC Table” and “MIB Counters”. The tables and counters are indirectly accessed via registers 121 to 131.

The KSZ8873MML supports two standard SPI commands: ‘0000_0011’ for data read and ‘0000_0010’ for data write. SPI multiple read and multiple write are also supported by the KSZ8873MML to expedite register read back and register configuration, respectively.

SPI multiple read is initiated when the master device continues to drive the KSZ8873MML SPISN input pin (SPI Slave Select signal) low after a byte (a register) is read. The KSZ8873MML internal address counter increments automatically to the next byte (next register) after the read. The next byte at the next register address is shifted out onto the KSZ8873MML SPIQ output pin. SPI multiple read continues until the SPI master device terminates it by de-asserting the SPISN signal to the KSZ8873MML.

Similarly, SPI multiple write is initiated when the master device continues to drive the KSZ8873MML SPISN input pin low after a byte (a register) is written. The KSZ8873MML internal address counter increments automatically to the next byte (next register) after the write. The next byte that is sent from the master device to the KSZ8873MML SDA input pin is written to the next register address. SPI multiple write continues until the SPI master device terminates it by de-asserting the SPISN signal to the KSZ8873MML.

For both SPI multiple read and multiple write, the KSZ8873MML internal address counter wraps back to register address zero once the highest register address is reached. This feature allows all 198 KSZ8873MML registers to be read, or written with a single SPI command from any initial register address.

The KSZ8873MML is capable of supporting a SPI bus.

The following is a sample procedure for programming the KSZ8873MML using the SPI bus:

1. At the board level, connect the KSZ8873MML pins as follows:

KSZ8873MML Pin #	KSZ8873MML Signal Name	External Processor Signal Description
39	SPISN	SPI Slave Select
41	SCL (SPIC)	SPI Clock
42	SDA (SPID)	SPI Data (Master output; Slave input)
38	SPIQ	SPI Data (Master input; Slave output)

Table 9. SPI Connections

2. Enable SPI slave mode by setting the KSZ8873MML strap-in pins P2LED[1:0] to “10”.
3. Power up the board and assert reset to the KSZ8873MML.
4. Configure the desired register settings in the KSZ8873MML, using the SPI write or multiple write command.
5. Read back and verify the register settings in the KSZ8873MML, using the SPI read or multiple read command.

Some of the configuration settings, such as “Aging enable”, “Auto Negotiation Enable”, “Force Speed” and “Power down” can be programmed after the switch has been started.

The following four figures illustrate the SPI data cycles for “Write”, “Read”, “Multiple Write” and “Multiple Read”. The read data is registered out of SPIQ on the falling edge of SPIC, and the data input on SPID is registered on the rising edge of SPIC.

Downloaded from Arrow.com.

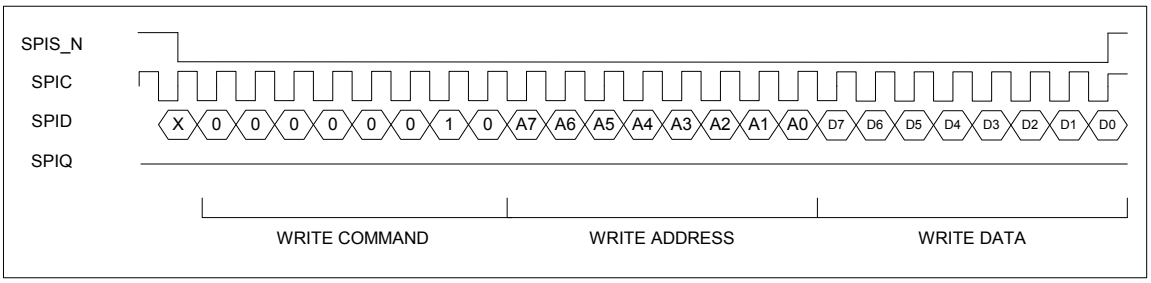

Figure 10. SPI Write Data Cycle

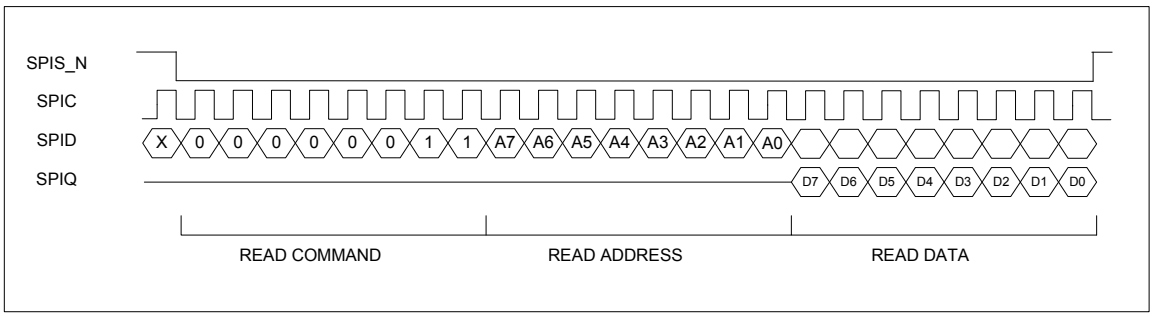

Figure 11. SPI Read Data Cycle

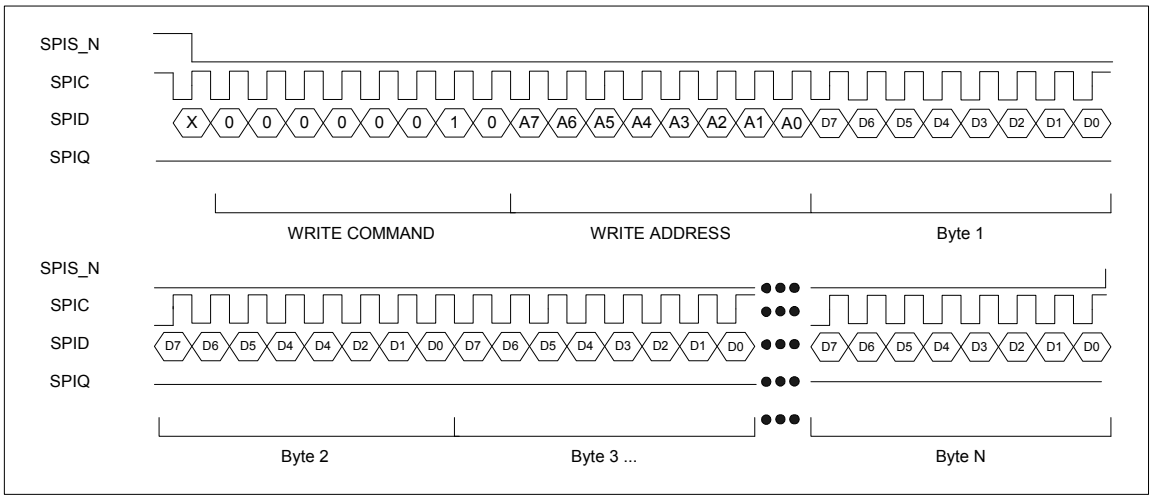

Figure 12. SPI Multiple Write

Downloaded from Arrow.com.

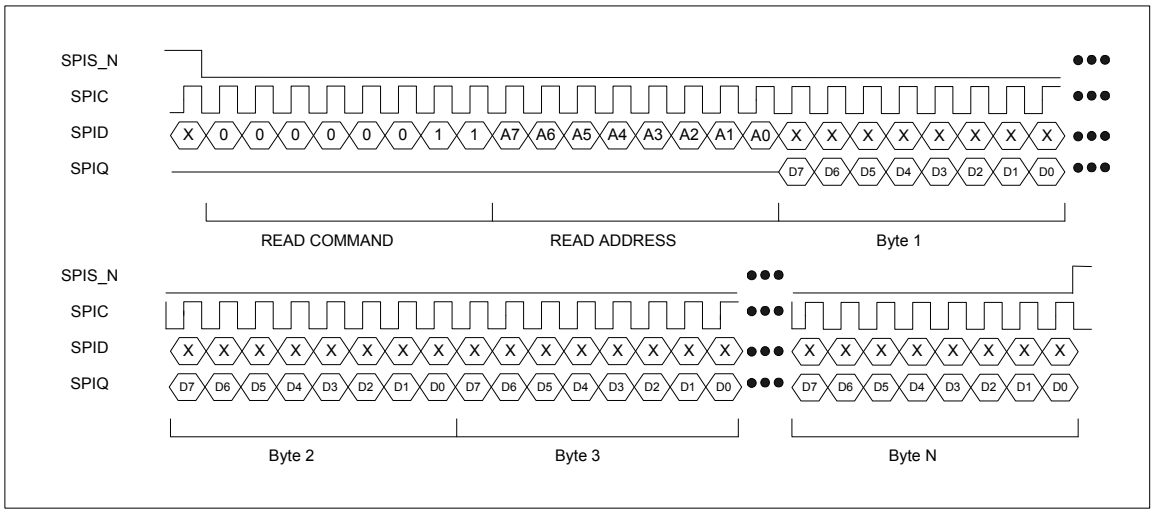

Figure 13. SPI Multiple Read

Downloaded from Arrow.com.

Loopback Support

The KSZ8873MML provides loopback support for remote diagnostic of failure. In loopback mode, the speed at the PHY ports needs to be set to 100BASE-TX. The KSZ8873MML only support Near-end (Remote) Loopback.

Near-end (Remote) Loopback

Near-end (Remote) loopback is conducted at PHY port 2.of the KSZ8873MML. The loopback path starts at the PHY port's receive inputs (RXPx/RXMx), wraps around at the same PHY port's PMD/PMA, and ends at the PHY port's transmit outputs (TXPx/TXMx).

Bit [1] of registers 42 is used to enable near-end loopback for ports 2. Alternatively, the MII Management register 31, bit [1] can be used to enable near-end loopback.

The near-end loopback paths are illustrated in the following figure.

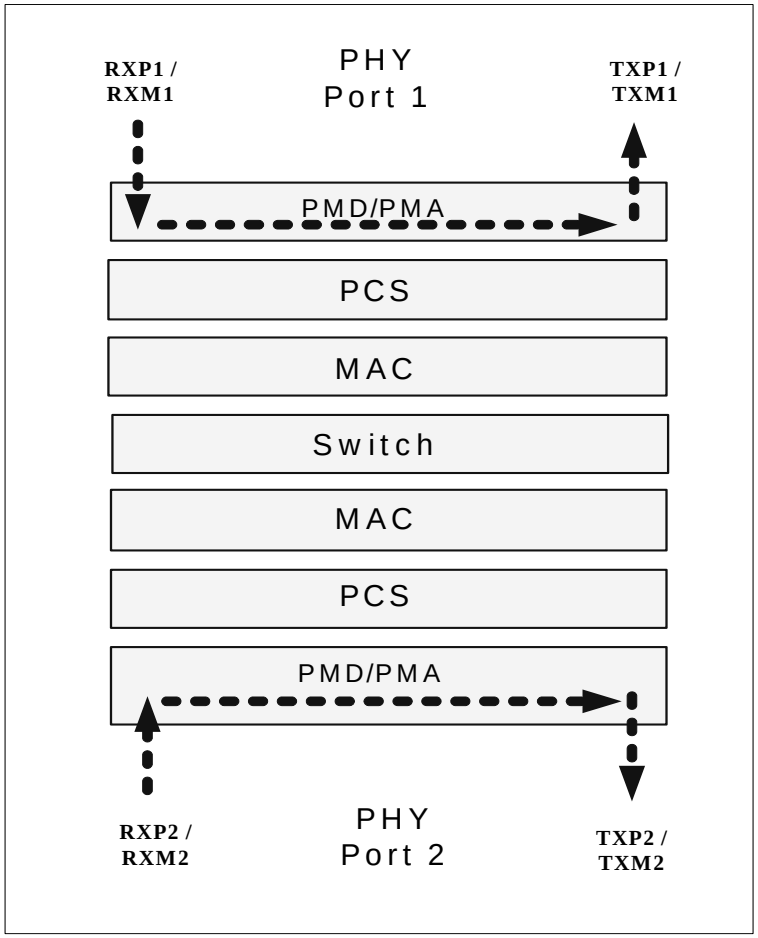

Figure 14. Near-end (Remote) Loopback Path

Downloaded from Arrow.com.

MII Management (MIIM) Registers

The MIIM interface is used to access the MII PHY registers defined in this section. The SPI, I^2C, and SMI interfaces can also be used to access some of these registers. The latter three interfaces use a different mapping mechanism than the MIIM interface.

The “PHYADs” by defaults are assigned “0x1” for PHY1 as reserved in KSZ8873MML and “0x2” for PHY2 (port 2). Additionally, these “PHYADs” can be programmed to the PHY addresses specified in bits[7:3] of Register 15 (0x0F): Global Control 13.

The “REGAD” supported are 0x0-0x5, 0x1D and 0x1F.

Register Number	Description
PHYAD = 0x2, REGAD = 0x0	PHY2 Basic Control Register
PHYAD = 0x2, REGAD = 0x1	PHY2 Basic Status Register
PHYAD = 0x2, REGAD = 0x2	PHY2 Physical Identifier I
PHYAD = 0x2, REGAD = 0x3	PHY2 Physical Identifier II
PHYAD = 0x2, REGAD = 0x4	PHY2 Auto-Negotiation Advertisement Register
PHYAD = 0x2, REGAD = 0x5	PHY2 Auto-Negotiation Link Partner Ability Register
PHYAD = 0x2, 0x6 – 0x1C	PHY2 Not supported
PHYAD = 0x2, 0x1D	PHY2 LinkMD Control/Status
PHYAD = 0x2, 0x1E	PHY2 Not supported
PHYAD = 0x2, 0x1F	PHY2 Special Control/Status

Downloaded from Arrow.com.

PHY1 Register 0 (PHYAD = 0x1, REGAD = 0x0): Reserved

PHY2 Register 0 (PHYAD = 0x2, REGAD = 0x0): MII Basic Control

Bit	Name	R/W	Description	Default	Reference
15	Soft reset	RO	NOT SUPPORTED	0	
14	Loopback	R/W	= 1, Perform loopback, as indicated: **Port 1 Loopback (reg. 29, bit 0 = '1')** Start: RXP2/RXM2 (port 2) Loopback: PMD/PMA of port 1's PHY End: TXP2/TXM2 (port 2) **Port 2 Loopback (reg. 45, bit 0 = '1')** Start: RXP1/RXM1 (port 1) Loopback: PMD/PMA of port 2's PHY End: TXP1/TXM1 (port 1) =0, Normal operation	0	Reg. 29, bit 0 Reg. 45, bit 0
13	Force 100	R/W	=1, 100 Mbps =0, 10 Mbps	0	Reg. 28, bit 6 Reg. 44, bit 6
12	AN enable	R/W	=1, Auto-negotiation enabled =0, Auto-negotiation disabled	1	Reg. 28, bit 7 Reg. 44, bit 7
11	Power down	R/W	=1, Power down =0, Normal operation	0	Reg. 29, bit 3 Reg. 45, bit 3
10	Isolate	RO	NOT SUPPORTED	0	
9	Restart AN	R/W	=1, Restart auto-negotiation =0, Normal operation	0	Reg. 29, bit 5 Reg. 45, bit 5
8	Force full duplex	R/W	=1, Full duplex =0, Half duplex	0	Reg. 28, bit 5 Reg. 44, bit 5
7	Collision test	RO	NOT SUPPORTED	0	
6	Reserved	RO		0	
5	Hp_mdix	R/W	=1, HP Auto MDI/MDI-X mode =0, Micrel Auto MDI/MDI-X mode	1	Reg. 31, bit 7 Reg. 47, bit 7
4	Force MDI	R/W	=1, Force MDI (transmit on RXP / RXM pins) =0, Normal operation (transmit on TXP / TXM pins)	0	Reg. 29, bit 1 Reg. 45, bit 1
3	Disable MDIX	R/W	=1, Disable auto MDI-X =0, Enable auto MDI-X	0	Reg. 29, bit 2 Reg. 45, bit 2
2	Disable far-end fault	R/W	=1, Disable far-end fault detection =0, Normal operation	0	Reg. 29, bit 4
1	Disable transmit	R/W	=1, Disable transmit =0, Normal operation	0	Reg. 29, bit 6 Reg. 45, bit 6
0	Disable LED	R/W	=1, Disable LED =0, Normal operation	0	Reg. 29, bit 7 Reg. 45, bit 7

Downloaded from Arrow.com.

PHY1 Register 1 (PHYAD = 0x1, REGAD = 0x1): Reserved

PHY2 Register 1 (PHYAD = 0x2, REGAD = 0x1): MII Basic Status

Bit	Name	R/W	Description	Default	Reference
15	T4 capable	RO	=0, Not 100 BASE-T4 capable	0	
14	100 Full capable	RO	=1, 100BASE-TX full duplex capable =0, Not capable of 100BASE-TX full duplex	1	Always 1
13	100 Half capable	RO	=1, 100BASE-TX half duplex capable =0, Not 100BASE-TX half duplex capable	1	Always 1
12	10 Full capable	RO	=1, 10BASE-T full duplex capable =0, Not 10BASE-T full duplex capable	1	Always 1
11	10 Half capable	RO	=1, 10BASE-T half duplex capable =0, Not 10BASE-T half duplex capable	1	Always 1
10-7	Reserved	RO		0000	
6	Preamble suppressed	RO	NOT SUPPORTED	0	
5	AN complete	RO	=1, Auto-negotiation complete =0, Auto-negotiation not completed	0	Reg. 30, bit 6 Reg. 46, bit 6
4	Far-end fault	RO	=1, Far-end fault detected =0, No far-end fault detected	0	Reg. 31, bit 0
3	AN capable	RO	=1, Auto-negotiation capable =0, Not auto-negotiation capable	1	Reg. 28, bit 7 Reg. 44, bit 7
2	Link status	RO	=1, Link is up =0, Link is down	0	Reg. 30, bit 5 Reg. 46, bit 5
1	Jabber test	RO	NOT SUPPORTED	0	
0	Extended capable	RO	=0, Not extended register capable	0	

PHY1 Register 2 (PHYAD = 0x1, REGAD = 0x2): Reserved

PHY2 Register 2 (PHYAD = 0x2, REGAD = 0x2): PHYID High

Bit	Name	R/W	Description	Default
15-0	PHYID high	RO	High order PHYID bits	0x0022

PHY1 Register 3 (PHYAD = 0x1, REGAD = 0x3): Reserved

PHY2 Register 3 (PHYAD = 0x2, REGAD = 0x3): PHYID Low

Bit	Name	R/W	Description	Default
15-0	PHYID low	RO	Low order PHYID bits	0x1430

Downloaded from Arrow.com.

PHY1 Register 4 (PHYAD = 0x1, REGAD = 0x4): Reserved

PHY2 Register 4 (PHYAD = 0x2, REGAD = 0x4): Auto-Negotiation Advertisement Ability

Bit	Name	R/W	Description	Default	Reference
15	Next page	RO	NOT SUPPORTED	0	
14	Reserved	RO		0	
13	Remote fault	RO	NOT SUPPORTED	0	
12-11	Reserved	RO		00	
10	Pause	R/W	=1, Advertise pause ability =0, Do not advertise pause ability	1	Reg. 28, bit 4 Reg. 44, bit 4
9	Reserved	R/W		0	
8	Adv 100 Full	R/W	=1, Advertise 100 full duplex ability =0, Do not advertise 100 full duplex ability	1	Reg. 28, bit 3 Reg. 44, bit 3
7	Adv 100 Half	R/W	=1, Advertise 100 half duplex ability =0, Do not advertise 100 half duplex ability	1	Reg. 28, bit 2 Reg. 44, bit 2
6	Adv 10 Full	R/W	=1, Advertise 10 full duplex ability =0, Do not advertise 10 full duplex ability	1	Reg. 28, bit 1 Reg. 44, bit 1
5	Adv 10 Half	R/W	=1, Advertise 10 half duplex ability =0, Do not advertise 10 half duplex ability	1	Reg. 28, bit 0 Reg. 44, bit 0
4-0	Selector field	RO	802.3	00001	

PHY1 Register 5 (PHYAD = 0x1, REGAD = 0x5): Reserved

PHY2 Register 5 (PHYAD = 0x2, REGAD = 0x5): Auto-Negotiation Link Partner Ability

Bit	Name	R/W	Description	Default	Reference
15	Next page	RO	NOT SUPPORTED	0	
14	LP ACK	RO	NOT SUPPORTED	0	
13	Remote fault	RO	NOT SUPPORTED	0	
12-11	Reserved	RO		00	
10	Pause	RO	Link partner pause capability	0	Reg. 30, bit 4 Reg. 46, bit 4
9	Reserved	RO		0	
8	Adv 100 Full	RO	Link partner 100 full capability	0	Reg. 30, bit 3 Reg. 46, bit 3
7	Adv 100 Half	RO	Link partner 100 half capability	0	Reg. 30, bit 2 Reg. 46, bit 2
6	Adv 10 Full	RO	Link partner 10 full capability	0	Reg. 30, bit 1 Reg. 46, bit 1
5	Adv 10 Half	RO	Link partner 10 half capability	0	Reg. 30, bit 0 Reg. 46, bit 0
4-0	Reserved	RO		00000	

Downloaded from Arrow.com.

PHY1 Register 29 (PHYAD = 0x1, REGAD = 0x1D): Reserved

PHY2 Register 29 (PHYAD = 0x2, REGAD = 0x1D): LinkMD Control/Status

Bit	Name	R/W	Description	Default	Reference
15	Vct_enable	R/W (SC)	=1, Enable cable diagnostic. After VCT test has completed, this bit will be self-cleared. =0, Indicate cable diagnostic test (if enabled) has completed and the status information is valid for read.	0	Reg. 42, bit 4
14-13	Vct_result	RO	=00, Normal condition =01, Open condition detected in cable =10, Short condition detected in cable =11, Cable diagnostic test has failed	00	Reg 42, bit[6:5]
12	Vct 10M Short	RO	=1, Less than 10 meter short	0	Reg. 42, bit 7
11-9	Reserved	RO	Reserved	000	
8-0	Vct_fault_count	RO	Distance to the fault. It's approximately 0.4m*vct_fault_count[8:0]	{0, (0x00)}	{(Reg. 42, bit 0), (Reg. 43, bit[7:0])}

PHY1 Register 31 (PHYAD = 0x1, REGAD = 0x1F): Reserved

PHY2 Register 31 (PHYAD = 0x2, REGAD = 0x1F): PHY Special Control/Status

Bit	Name	R/W	Description	Default	Reference
15-6	Reserved	RO	Reserved	{(0x00),00}	
5	Polrvs	RO	=1, Polarity is reversed =0, Polarity is not reversed	0	Reg. 31, bit 5 Reg. 47, bit 5 Note: This bit is only valid for 10BT
4	MDI-X status	RO	=1, MDI-X =0, MDI	0	Reg. 30, bit 7 Reg. 46, bit 7
3	Force_lnk	R/W	=1, Force link pass =0, Normal Operation	0	Reg. 26, bit 3 Reg. 42, bit 3
2	Pwrsave	R/W	=0, Enable power saving =1, Disable power saving	1	Reg. 26, bit 2 Reg. 42, bit 2
1	Remote Loopback	R/W	=1, Perform Remote loopback, as follows: **Port 1 (reg. 26, bit 1 = '1')** Start: RXP1/RXM1 (port 1) Loopback: PMD/PMA of port 1's PHY End: TXP1/TXM1 (port 1) **Port 2 (reg. 42, bit 1 = '1')** Start: RXP2/RXM2 (port 2) Loopback: PMD/PMA of port 2's PHY End: TXP2/TXM2 (port 2) =0, Normal Operation	0	Reg. 26, bit 1 Reg. 42, bit 1
0	Reserved	R/W	Reserved Do not change the default value.	0	

Downloaded from Arrow.com.

Memory Map (8-bit Registers)

Global Registers

Register (Decimal)	Register (Hex)	Description
0-1	0x00-0x01	Chip ID Registers
2-15	0x02-0x0F	Global Control Registers

Port Registers

Register (Decimal)	Register (Hex)	Description
16-29	0x10-0x1D	Port 1 Control Registers, including MII PHY Registers
30-31	0x1E-0x1F	Port 1 Status Registers, including MII PHY Registers
32-45	0x20-0x2D	Port 2 Control Registers, including MII PHY Registers
46-47	0x2E-0x2F	Port 2 Status Registers, including MII PHY Registers
48-57	0x30-0x39	Port 3 Control Registers
58-62	0x3A-0x3E	Reserved
63	0x3F	Port 3 Status Register
64-95	0x40-0x5F	Reserved

Advanced Control Registers

Register (Decimal)	Register (Hex)	Description
96-111	0x60-0x6F	TOS Priority Control Registers
112-117	0x70-0x75	Switch Engine's MAC Address Registers
118-120	0x76-0x78	User Defined Registers
121-122	0x79-0x7A	Indirect Access Control Registers
123-131	0x7B-0x83	Indirect Data Registers
142-153	0x8E-0x99	Station Address
154-165	0x9A-0xA5	Egress data rate limit
166	0xA6	Device mode indicator
167-170	0xA7-0Xaa	High Priority Packet Buffer Reserved
171-174	0xAB-0Xae	PM Usage Flow Control Select Mode
175-186	0xAF-0xBA	TXQ Split
187-188	0xBB-0Xbc	Link Change Interrupt register
189	0xBD	Force Pause Off Iteration Limit Enable
192	0xC0	Reserved
194	0xC2	Insert SRC PVID
195	0xC3	Power Management and LED Mode
196	0xC4	Sleep Mode
198	0xC6	Forward Invalid VID Frame and Host Mode

Downloaded from Arrow.com.

Register Description

Global Registers (Registers 0 – 15)

Register 0 (0x00): Chip ID0

Bit	Name	R/W	Description	Default
7-0	Family ID	RO	Chip family	0x88

Register 1 (0x01): Chip ID1 / Start Switch

Bit	Name	R/W	Description	Default
7-4	Chip ID	RO	0x3 is assigned to M series. (73M)	0x3
3-1	Revision ID	RO	Revision ID	-
0	Start Switch	RW	=1, start the switch (default) 0=, stop the switch	1

Register 2 (0x02): Global Control 0

Bit	Name	R/W	Description	Default
7	New Back-off Enable	R/W	New back-off algorithm designed for UNH =1, Enable =0, Disable	0
6	Reserved	RO	Reserved	0
5	Flush Dynamic MAC Table	R/W	=1, Enable flush dynamic MAC table for spanning tree application =0, Disable	0
4	Flush Static MAC Table	R/W	=1, Enable flush static MAC table for spanning tree application =0, Disable,	0
3	Pass Flow Control Packet	R/W	=1, Switch will pass 802.1x “flow control” packets =0, Switch will drop 802.1x “flow control” packets	0
2	Reserved	RO	Reserved	0
1	Reserved	RO	Reserved Do not change the default value.	0
0	Reserved	RO	Reserved	0

Downloaded from Arrow.com.

Register 3 (0x03): Global Control 1

Bit	Name	R/W	Description	Default
7	Pass All Frames	R/W	=1, Switch all packets including bad ones. Used solely for debugging purposes. Works in conjunction with sniffer mode only.	0
6	Port 3 Tail Tag Mode Enable	R/W	=1, Enable port 3 tail tag mode. =0, Disable.	0
5	IEEE 802.3x Transmit Direction Flow Control Enable	R/W	=1, Will enable transmit direction flow control feature. =0, Will not enable transmit direction flow control feature. Switch will not generate any flow control (PAUSE) frame.	1
4	IEEE 802.3x Receive Direction Flow Control Enable	R/W	=1, Will enable receive direction flow control feature. =0, Will not enable receive direction flow control feature. Switch will not react to any flow control (PAUSE) frame it receives.	1
3	Frame Length Field Check	R/W	=1, Will check frame length field in the IEEE packets. If the actual length does not match, the packet will be dropped (for Length/Type field < 1500). =0, Not check	0
2	Aging Enable	R/W	=1, Enable age function in the chip =0, Eisable age function in the chip	1
1	Fast Age Enable	R/W	=1, Turn on fast age (800us)	0
0	Aggressive Back-off Enable	R/W	=1, Enable more aggressive back off algorithm in half duplex mode to enhance performance. This is not an IEEE standard.	0

Register 4 (0x04): Global Control 2

Bit	Name	R/W	Description	Default
7	Unicast Port-VLAN Mismatch Discard	R/W	This feature is used with port-VLAN (described in reg. 17, reg. 33, …) =1, All packets can not cross VLAN boundary =0, Unicast packets (excluding unkown/multicast/ broadcast) can cross VLAN boundary Note: Port mirroring is not supported if this bit is set to “0”.	1
6	Multicast Storm Protection Disable	R/W	=1, “Broadcast Storm Protection” does not include multicast packets. Only DA = FF-FF-FF-FF-FF-FF packets will be regulated. =0, “Broadcast Storm Protection” includes DA = FF-FF-FF-FF-FF-FF and DA[40] = 1 packets.	1
5	Back Pressure Mode	R/W	=1, Carrier sense based backpressure is selected =0, Collision based backpressure is selected	1
4	Flow Control and Back Pressure Fair Mode	R/W	=1, Fair mode is selected. In this mode, if a flow control port and a non-flow control port talk to the same destination port, packets from the non-flow control port may be dropped. This is to prevent the flow control port from being flow controlled for an extended period of time. =0, In this mode, if a flow control port and a non-flow control port talk to the same destination port, the flow control port will be flow controlled. This may not be “fair” to the flow control port.	1
3	No Excessive Collision Drop	R/W	=1, The switch will not drop packets when 16 or more collisions occur. =0, The switch will drop packets when 16 or more collisions occur.	0

Downloaded from Arrow.com.

Bit	Name	R/W	Description	Default
2	Huge Packet Support	R/W	=1, Will accept packet sizes up to 1916 bytes (inclusive). This bit setting will override setting from bit 1 of this register. = 0, the max packet size will be determined by bit 1 of this register.	0
1	Legal Maximum Packet Size Check Enable	R/W	=0, Will accept packet sizes up to 1536 bytes (inclusive). =1, 1522 bytes for tagged packets, 1518 bytes for untagged packets. Any packets larger than the specified value will be dropped.	0
0	Reserved	RO	Reserved Do not change the default value.	0

Register 5 (0x05): Global Control 3

Bit	Name	R/W	Description	Default
7	802.1Q VLAN Enable	R/W	=1, 802.1Q VLAN mode is turned on. VLAN table needs to set up before the operation. =0, 802.1Q VLAN is disabled.	0
6	IGMP Snoop Enable on Switch MII Interface	R/W	=1, IGMP snoop is enabled. All IGMP packets will be forwarded to the Switch MII port. =0, IGMP snoop is disabled.	0
5	Reserved	RO	Reserved Do not change the default values.	0
4	Reserved	RO	Reserved Do not change the default values.	0
3	Weighted Fair Queue Enable	R/W	=0, Priority method set by the registers 175-186 bit [7]=0 for port 1, port 2 and port 3. =1, Weighted Fair Queueing enabled. When all four queues have packets waiting to transmit, the bandwidth allocation is q3:q2:q1:q0 = 8:4:2:1. If any queues are empty, the highest non-empty queue gets one more weighting. For example, if q2 is empty, q3:q2:q1:q0 becomes (8+1):0:2:1.	0
2	Reserved	RO	Reserved Do not change the default values.	0
1	Reserved	RO	Reserved Do not change the default values.	0
0	Sniff Mode Select	R/W	=1, Will do RX AND TX sniff (both source port and destination port need to match) =0, Will do RX OR TX sniff (either source port or destination port needs to match). This is the mode used to implement RX only sniff.	0

Downloaded from Arrow.com.

Register 6 (0x06): Global Control 4

Bit	Name	R/W	Description	Default
7	Reserved	RO	Reserved Do not change the default values.	0
6	Switch MII Half Duplex Mode	R/W	=1, Enable Port3 MII interface half-duplex mode. =0, Enable Port3 MII interface full-duplex mode.	Port 3: Pin P1LED0 strap option. Pull-up(1): Half -duplex mode Pull-down(0): Full-duplex mode Note: P1LED0 has internal pull-down. Port 1: Pin SMRXD11 strap option. Pull-up(1): Full -duplex mode Pull-down(0): Half-duplex mode Note: SMRXD11 has internal pull-up.
5	Switch MII Flow Control Enable	R/W	=1, Enable full duplex flow control on Switch Port3 MII interface. =0, Disable full duplex flow control on Switch Port3 MII interface.	Port 3: Pin P1LED1 strap option. Pull- up(1): Enable flow control Pull-down(0): Disable flow control Note: P1LED1 has internal pull-up. Port 1: Pin SMRXD10 Pull- up(1): Enable flow control Pull-down(0): Disable flow control Note: SMRXD10 has internal pull-up.
4	Switch MII 10BT	R/W	=1, The switch Port3 MII interface is in 10Mbps mode =0, The switch Port3 MII interface is in 100Mbps mode	Port 3: Pin SMRXDV1 (P3SPD) strap option. Pull-up(1): Enable 10Mbps Pull-down(0): Enable 100Mbps Note: SMRXDV1 (P3SPD) has internal pull-down. Port 1: Pin SMRXD12 (P1SPD) strap option. Pull-up(1): Enable 100Mbps Pull-down(0): enable 10Mbps Note: SMRXD12 has internal pull-up.

Downloaded from Arrow.com.

Bit	Name	R/W	Description	Default
3	Null VID Replacement	R/W	=1, Will replace NULL VID with port VID (12 bits) =0, No replacement for NULL VID	0
2-0	Broadcast Storm Protection Rate[(1)] Bit [10:8]	R/W	This register along with the next register determines how many "64 byte blocks" of packet data are allowed on an input port in a preset period. The period is 67ms for 100BT or 500ms for 10BT. The default is 1%.	000

Register 7 (0x07): Global Control 5

Bit	Name	R/W	Description	Default
7-0	Broadcast Storm Protection Rate[(1)] Bit [7:0]	R/W	This register along with the previous register determines how many "64 byte blocks" of packet data are allowed on an input port in a preset period. The period is 67ms for 100BT or 500ms for 10BT. The default is 1%.	0x63

Note: [(1)] 100BT Rate: 148,800 frames/sec * 67 ms/interval * 1% = 99 frames/interval (approx.) = 0x63

Register 8 (0x08): Global Control 6

Bit	Name	R/W	Description	Default
7-0	Factory Testing	RO	Reserved Do not change the default values.	0x00

Register 9 (0x09): Global Control 7

Bit	Name	R/W	Description	Default
7-0	Factory Testing	RO	Reserved Do not change the default values.	0x24

Register 10 (0x0A): Global Control 8

Bit	Name	R/W	Description	Default
7-0	Factory Testing	RO	Reserved Do not change the default values.	0x35

Register 11 (0x0B): Global Control 9

Bit	Name	R/W	Description	Default
7-6	CPU interface Clock Selection	R/W	=00, 31.25MHz supports SPI speed below 6MHz =01, 62.5MHz supports SPI speed between 6MHz to 12.5MHz =10, 125MHz supports SPI speed above 12.5MHz Note: Lower clock speed will save more power consumption, It is better set to to 31.25MHz if SPI doesn't request a high speed.	10
5-4	Reserved	RO	N/A Don't change	00
3-2	Reserved	RO	N/A Don't change	10
1	Reserved	RO	N/A Don't change	0
0	Reserved	RO	N/A Don't change	0

Downloaded from Arrow.com.

Register 12 (0x0C): Global Control 10

Bit	Name	R/W	Description	Default
7-6	Tag_0x3	R/W	IEEE 802.1p mapping. The value in this field is used as the frame's priority when its IEEE 802.1p tag has a value of 0x3.	01
5-4	Tag_0x2	R/W	IEEE 802.1p mapping. The value in this field is used as the frame's priority when its IEEE 802.1p tag has a value of 0x2.	01
3-2	Tag_0x1	R/W	IEEE 802.1p mapping. The value in this field is used as the frame's priority when its IEEE 802.1p tag has a value of 0x1.	00
1-0	Tag_0x0	R/W	IEEE 802.1p mapping. The value in this field is used as the frame's priority when its IEEE 802.1p tag has a value of 0x0.	00

Register 13 (0x0D): Global Control 11

Bit	Name	R/W	Description	Default
7-6	Tag_0x7	R/W	IEEE 802.1p mapping. The value in this field is used as the frame's priority when its IEEE 802.1p tag has a value of 0x7.	11
5-4	Tag_0x6	R/W	IEEE 802.1p mapping. The value in this field is used as the frame's priority when its IEEE 802.1p tag has a value of 0x6.	11
3-2	Tag_0x5	R/W	IEEE 802.1p mapping. The value in this field is used as the frame's priority when its IEEE 802.1p tag has a value of 0x5.	10
1-0	Tag_0x4	R/W	IEEE 802.1p mapping. The value in this field is used as the frame's priority when its IEEE 802.1p tag has a value of 0x4.	10

Register 14 (0x0E): Global Control 12

Bit	Name	R/W	Description	Default
7	Unknown Packet Default Port Enable	R/W	Send packets with unknown destination MAC addresses to specified port(s) in bits [2:0] of this register. =0, Disable =1, Enable	0
6	Drive Strength of I/O Pad	R/W	=1, 16mA =0, 8mA	1
5	Reserved	RO	Reserved	0
4	Reserved	RO	Reserved	0
3	Reserved	RO	Reserved Do not change the default values.	
2-0	Unknown Packet Default Port	R/W	Specify which port(s) to send packets with unknown destination MAC addresses. This feature is enabled by bit [7] of this register. Bit 2 stands for port 3. Bit 1 stands for port 2. Bit 0 stands for port 1. An '1' includes a port. An '0' excludes a port.	111

Downloaded from Arrow.com.

Register 15 (0x0F): Global Control 13

Bit	Name	R/W	Description	Default
7-3	PHY Address	R/W	00000 : N/A 00001 : Port 1 PHY address is 0x1 00010 : Port 1 PHY address is 0x2 … 11101 : Port 1 PHY address is 0x29 11110 : N/A 11111 : N/A Note: Port 2 PHY address = (Port 1 PHY address) + 1	00001
2-0	Reserved	RO	Reserved Do not change the default values.	000

Downloaded from Arrow.com.

Port Registers (Registers 16 – 95)

The following registers are used to enable features that are assigned on a per port basis. The register bit assignments are the same for all ports, but the address for each port is different, as indicated.

Register 16 (0x10): Port 1 Control 0

Register 32 (0x20): Port 2 Control 0

Register 48 (0x30): Port 3 Control 0

Bit	Name	R/W	Description	Default
7	Broadcast Storm Protection Enable	R/W	=1, Enable broadcast storm protection for ingress packets on port =0, Disable broadcast storm protection	0
6	DiffServ Priority Classification Enable	R/W	=1, Enable DiffServ priority classification for ingress packets (IPv4) on port =0, Disable DiffServ function	0
5	802.1p Priority Classification Enable	R/W	=1, Enable 802.1p priority classification for ingress packets on port =0, Disable 802.1p	0
4-3	Port-based Priority Classification	R/W	=00, Ingress packets on port will be classified as priority 0 queue if “Diffserv” or “802.1p” classification is not enabled or fails to classify. =01, Ingress packets on port will be classified as priority 1 queue if “Diffserv” or “802.1p” classification is not enabled or fails to classify. =10, Ingress packets on port will be classified as priority 2 queue if “Diffserv” or “802.1p” classification is not enabled or fails to classify. =11, Ingress packets on port will be classified as priority 3 queue if “Diffserv” or “802.1p” classification is not enabled or fails to classify. Note: “DiffServ”, “802.1p” and port priority can be enabled at the same time. The OR’ed result of 802.1p and DSCP overwrites the port priority.	00
2	Tag Insertion	R/W	=1, When packets are output on the port, the switch will add 802.1p/q tags to packets without 802.1p/q tags when received. The switch will not add tags to packets already tagged. The tag inserted is the ingress port’s “port VID”. =0, Disable tag insertion	0
1	Tag Removal	R/W	=1, When packets are output on the port, the switch will remove 802.1p/q tags from packets with 802.1p/q tags when received. The switch will not modify packets received without tags. =0, Wisable tag removal	0
0	TXQ Split Enable	R/W	=1, Split TXQ to 4 queue configuration. It cannot be enable at the same time with split 2 queue at register 18, 34,50 bit 7. =0, No split, treated as 1 queue configuration	0

Downloaded from Arrow.com.

Register 17 (0x11): Port 1 Control 1

Register 33 (0x21): Port 2 Control 1

Register 49 (0x31): Port 3 Control 1

Bit	Name	R/W	Description	Default
7	Sniffer Port	R/W	=1, Port is designated as sniffer port and will transmit packets that are monitored. =0, Port is a normal port	0
6	Receive Sniff	R/W	=1, All packets received on the port will be marked as “monitored packets” and forwarded to the designated “sniffer port” =0, No receive monitoring	0
5	Transmit Sniff	R/W	=1, All packets transmitted on the port will be marked as “monitored packets” and forwarded to the designated “sniffer port” =0, No transmit monitoring	0
4	Double Tag	R/W	=1, All packets will be tagged with port default tag of ingress port regardless of the original packets are tagged or not =0, Do not double tagged on all packets	0
3	User Priority Ceiling	R/W	=1, if the packet’s “user priority field” is greater than the “user priority field” in the port default tag register, replace the packet’s “user priority field” with the “user priority field” in the port default tag register. =0, Do not compare and replace the packet’s ‘user priority field”	0
2-0	Port VLAN membership	R/W	Define the port’s egress port VLAN membership. The port can only communicate within the membership. Bit 2 stands for port 3, bit 1 stands for port 2, bit 0 stands for port 1. An ‘1’ includes a port in the membership. An ‘0’ excludes a port from membership.	111

Register 18 (0x12): Port 1 Control 2

Register 34 (0x22): Port 2 Control 2

Register 50 (0x32): Port 3 Control 2

Bit	Name	R/W	Description	Default
7	Enable 2 Queue Split of Tx Queue	R/W	=1, Enable It cannot be enable at the same time with split 4 queue at register 16,32 and 48 bit 0. =0, Disable	0
6	Ingress VLAN Filtering	R/W	=1, The switch will discard packets whose VID port membership in VLAN table bits [18:16] does not include the ingress port. =0, No ingress VLAN filtering.	0
5	Discard non PVID Packets	R/W	=1, The switch will discard packets whose VID does not match ingress port default VID. =0, No packets will be discarded	0

Downloaded from Arrow.com.

Bit	Name	R/W	Description	Default
4	Force Flow Control	R/W	=1, Will always enable full duplex flow control on the port, regardless of AN result. =0, Full duplex flow control is enabled based on AN result.	Pin value during reset: For port 1, P1FFC pin For port 2, SMRXD30 pin For port 3, this bit has no meaning. Flow control is set by Reg. 6, bit 5.
3	Back Pressure Enable	R/W	=1, Enable port's half duplex back pressure =0, Disable port's half duplex back pressure	0
2	Transmit Enable	R/W	=1, Enable packet transmission on the port =0, Disable packet transmission on the port	1
1	Receive Enable	R/W	=1, Enable packet reception on the port =0, Disable packet reception on the port	1
0	Learning Disable	R/W	=1, Disable switch address learning capability =0, Enable switch address learning	0

Note: Bits [2:0] are used for spanning tree support.

Register 19 (0x13): Port 1 Control 3

Register 35 (0x23): Port 2 Control 3

Register 51 (0x33): Port 3 Control 3

Bit	Name	R/W	Description	Default
7-0	Default Tag [15:8]	R/W	Port's default tag, containing 7-5 : User priority bits 4 : CFI bit 3-0 : VID[11:8]	0x00

Register 20 (0x14): Port 1 Control 4

Register 36 (0x24): Port 2 Control 4

Register 52 (0x34): Port 3 Control 4

Bit	Name	R/W	Description	Default
7-0	Default Tag [7:0]	R/W	Port's default tag, containing 7-0 : VID[7:0]	0x01

Note: Registers 19 and 20 (and those corresponding to other ports) serve two purposes:
Associated with the ingress untagged packets, and used for egress tagging.
Default VID for the ingress untagged or null-VID-tagged packets, and used for address lookup.

Downloaded from Arrow.com.

Register 21 (0x15): Port 1 Control 5

Register 37 (0x25): Port 2 Control 5

Register 53 (0x35): Port 3 Control 5

Bit	Name	R/W	Description	Default
7	Port 1 or 3 MII mode Selection	R/W	1: Port 1 or 3 MII MAC mode 0: Port 1 or 3 MII PHY mode Note: Bit 7 is reserved for port 2	0 Inversion of power strapped value of SMRXD13 (Port 1) and SMRXDV3(Port 3).
6	Self-address filtering enable MACA1 (not for 0x35)	R/W	=1, Eable port 1 self-address filtering MACA1 =0, Disable Note: Port 1 MII connect to an external PHY for KSZ8873MML.	0
5	Self-address filtering enable MACA2 (not for 0x35)	R/W	=1, Eable port 2 Self-address filtering MACA2 =0, Disable	0
4	Drop Ingress Tagged Frame	R/W	=1, Enable =0, Disable	0
3-2	Limit Mode	R/W	**Ingress Limit Mode** These bits determine what kinds of frames are limited and counted against ingress rate limiting. =00, Limit and count all frames =01, Limit and count Broadcast, Multicast, and flooded unicast frames =10, Limit and count Broadcast and Multicast frames only =11, Limit and count Broadcast frames only	00
1	Count IFG	R/W	**Count IFG bytes** =1, Ech frame's minimum inter frame gap (IFG) bytes (12 per frame) are included in Ingress and Egress rate limiting calculations. =0, IFG bytes are not counted.	0
0	Count Pre	R/W	**Count Preamble bytes** =1, Ech frame's preamble bytes (8 per frame) are included in Ingress and Egress rate limiting calculations. =0, Peamble bytes are not counted.	0

Downloaded from Arrow.com.

Register 22[6:0] (0x16): Port 1 Q0 ingress data rate limit

Register 38[6:0] (0x26): Port 2 Q0 ingress data rate limit

Register 54[6:0] (0x36): Port 3 Q0 ingress data rate limit

Bit	Name	R/W	Description	Default
7	Reserved	RO	Reserved	0
6-0	Q0 Ingress Data Rate limit	R/W	**Ingress data rate limit for priority 0 frames** Ingress traffic from this priority queue is shaped according to the ingress Data Rate Limit Table.	0

Register 23[6:0] (0x17): Port 1 Q1 ingress data rate limit

Register 39[6:0] (0x27): Port 2 Q1 ingress data rate limit

Register 55[6:0] (0x37): Port 3 Q1 ingress data rate limit

Bit	Name	R/W	Description	Default
7	Reserved	R/W	Reserved Do not change the default values.	0
6-0	Q1 Ingress data Rate limit	R/W	**Ingress data rate limit for priority 1 frames** Ingress traffic from this priority queue is shaped according to the ingress Data Rate Limit Table.	0

Register 24[6:0] (0x18): Port 1 Q2 ingress data rate limit

Register 40[6:0] (0x28): Port 2 Q2 ingress data rate limit

Register 56[6:0] (0x38): Port 3 Q2 ingress data rate limit

Bit	Name	R/W	Description	Default
7	Reserved	R/W	Reserved Do not change the default values.	0
6-0	Q2 Ingress Data Rate limit	R/W	**Ingress data rate limit for priority 2 frames** Ingress traffic from this priority queue is shaped according to ingress Data Rate Limit Table.	0

Register 25[6:0] (0x19): Port 1 Q3 ingress data rate limit

Register 41[6:0] (0x29): Port 2 Q3 ingress data rate limit

Register 57[6:0] (0x39): Port 3 Q3 ingress data rate limit

Bit	Name	R/W	Description	Default
7	Reserved	R/W	Reserved Do not change the default values.	0
6-0	Q3 Ingress Data Rate limit	R/W	**Ingress data rate limit for priority 3 frames** Ingress traffic from this priority queue is shaped according to ingress Data Rate Limit Table.	0

Note: Most of the contents in registers 26-31 and registers 42-47 for ports 1 and 2, respectively, can also be accessed with the MIIM PHY registers.

Downloaded from Arrow.com.

Data Rate Limit for ingress or egress	**100BT** **Register bit[6:0], Q=0..3**	**10BT** **Register bit[6:0], Q=0..3**
	1 to 0x63 for the Rate 1Mbps to 99Mbps.	1 to 0x09 for the rate 1Mbps to 9Mbps
	0 or 0x64 for the rate 100Mbps	0 or 0x0A for the rate 10Mbps
64 Kbps	0x65	
128 Kbps	0x66	
192 Kbps	0x67	
256 Kbps	0x68	
320 Kbps	0x69	
384 Kbps	0x6A	
448 Kbps	0x6B	
512 Kbps	0x6C	
576 Kbps	0x6D	
640 Kbps	0x6E	
704 Kbps	0x6F	
768 Kbps	0x70	
832 Kbps	0x71	
896 Kbps	0x72	
960 Kbps	0x73	

Table 10. Data Rate Limit Table

Downloaded from Arrow.com.

Register 26 (0x1A): Port 1 Not Support

Register 42 (0x2A): Port 2 PHY Special Control/Status

Register 58 (0x3A): Reserved, not applied to port 3

Bit	Name	R/W	Description	Default
7	Vct 10M Short	RO	=1, Less than 10 meter short	0
6-5	Vct_result	RO	=00, Normal condition =01, Open condition detected in cable =10, Short condition detected in cable =11, Cable diagnostic test has failed	00
4	Vct_en	R/W (SC)	=1, Enable cable diagnostic test. After VCT test has completed, this bit will be self-cleared. =0, Indicate cable diagnostic test (if enabled) has completed and the status information is valid for read.	0
3	Force_lnk	R/W	=1, Force link pass =0, Normal Operation	0
2	Reserved	RO	Reserved Do not change the default value.	0
1	Remote Loopback	R/W	=1, Perform Remote loopback, as follows: **Port 2 (reg. 42, bit 1 = '1')** Start: RXP2/RXM2 (port 2) Loopback: PMD/PMA of port 2's PHY End: TXP2/TXM2 (port 2) =0, Normal Operation	0
0	Vct_fault_count[8]	RO	**Bit[8] of VCT fault count** Distance to the fault. It's approximately 0.4m*vct_fault_count[8:0]	0

Register 27 (0x1B): Port 1 Not Support

Register 43 (0x2B): Port 2 LinkMD Result

Register 59 (0x3B): Reserved, not applied to port 3

Bit	Name	R/W	Description	Default
7-0	Vct_fault_count[7:0]	RO	**Bits[7:0] of VCT fault count** Distance to the fault. It's approximately 0.4m*Vct_fault_count[8:0]	0x00

Downloaded from Arrow.com.

Register 28 (0x1C): Port 1 Not Support

Register 44 (0x2C): Port 2 Control 12

Register 60 (0x3C): Reserved, not applied to port 3

Bit	Name	R/W	Description	Default
7	Auto Negotiation Enable	R/W	=1, Auto negotiation is on =0, Disable auto negotiation; speed and duplex are determined by bits 6 and 5 of this register.	1 For port 1, P1ANEN pin value during reset. For port 2, SMRXD33 pin value during reset
6	Force Speed	R/W	=1, Forced 100BT if AN is disabled (bit 7) =0, Forced 10BT if AN is disabled (bit 7)	1 For port 1, P1SPD pin value during reset. For port 2, SMRXD32 pin value during reset.
5	Force Duplex	R/W	=1, Forced full duplex if (1) AN is disabled or (2) AN is enabled but failed. =0, Forced half duplex if (1) AN is disabled or (2) AN is enabled but failed. Note: This bit or strap pin should be set to '0' for the correct duplex mode indication of LED and register status when the link-up is AN to force mode.	1 For port 1, P1DPX pin value during reset. For port 2, SMRXD31 pin value during reset.
4	Advertise Flow Control capability	R/W	=1, Advertise flow control (pause) capability =0, Suppress flow control (pause) capability from transmission to link partner	1
3	Advertise 100BT Full Duplex Capability	R/W	=1, Advertise 100BT full duplex capability =0, Suppress 100BT full duplex capability from transmission to link partner	1
2	Advertise 100BT Half Duplex Capability	R/W	=1, Advertise 100BT half duplex capability =0, Suppress 100BT half duplex capability from transmission to link partner	1
1	Advertise 10BT Full Duplex Capability	R/W	=1, Advertise 10BT full duplex capability =0, Suppress 10BT full duplex capability from transmission to link partner	1
0	Advertise 10BT Half Duplex Capability	R/W	=1, Advertise 10BT half duplex capability =0, Suppress 10BT half duplex capability from transmission to link partner	1

Register 29 (0x1D): Port 1 Not Support

Register 45 (0x2D): Port 2 Control 13

Register 61 (0x3D): Reserved, not applied to port 3

Bit	Name	R/W	Description	Default
7	LED Off	R/W	=1, Turn off all port's LEDs (LEDx_1, LEDx_0, where "x" is the port number). These pins will be driven high if this bit is set to one. =0, Normal operation	0
6	Txdis	R/W	=1, Disable the port's transmitter	0

Downloaded from Arrow.com.

Bit	Name	R/W	Description	Default
			=0, Normal operation	
5	Restart AN	R/W	=1, Restart auto-negotiation =0, Normal operation	0
4	Disable Far-end Fault	R/W	=1, Disable far-end fault detection and pattern transmission. =0, Enable far-end fault detection and pattern transmission	0
3	Power down	R/W	=1, Power down =0, Normal operation	0
2	Disable Auto MDI/MDI-X	R/W	=1, Disable auto MDI/MDI-X function =0, Enable auto MDI/MDI-X function	0
1	Force MDI	R/W	If auto MDI/MDI-X is disabled, =1, Force PHY into MDI mode (transmit on RXP/RXM pins =0, Force PHY into MDI-X mode (transmit on TXP/TXM pins)	0
0	Loopback	R/W	=1, Perform loopback, as indicated: **Port 2 Loopback (reg. 45, bit 0 = '1')** Start: RXP1/RXM1 (port 1) Loopback: PMD/PMA of port 2's PHY End: TXP1/TXM1 (port 1) =0, Normal operation	0

Register 30 (0x1E): Port 1 Not Support

Register 46 (0x2E): Port 2 Status 0

Register 62 (0x3E): Reserved, not applied to port 3

Bit	Name	R/W	Description	Default
7	MDI-X Status	RO	=1, MDI =0, MDI-X	0
6	AN Done	RO	=1, Auto-negotiation completed =0, Auto-negotiation not completed	0
5	Link Good	RO	=1, Link good =0, Link not good	0
4	Partner Flow Control Capability	RO	=1, Link partner flow control (pause) capable =0, Link partner not flow control (pause) capable	0
3	Partner 100BT Full Duplex Capability	RO	=1, Link partner 100BT full duplex capable =0, Link partner not 100BT full duplex capable	0
2	Partner 100BT Half Duplex Capability	RO	=1, Link partner 100BT half duplex capable =0, Link partner not 100BT half duplex capable	0
1	Partner 10BT Full Duplex Capability	RO	=1, Link partner 10BT full duplex capable =0, Link partner not 10BT full duplex capable	0
0	Partner 10BT Half Duplex Capability	RO	=1, Link partner 10BT half duplex capable =0, Link partner not 10BT half duplex capable	0

Downloaded from Arrow.com.

Register 31 (0x1F): Port 1 MII Status 1 for SPD/DPX

Register 47 (0x2F): Port 2 Status 1

Register 63 (0x3F): Port 3 MII Status 1 for SPD/DPX

Bit	Name	R/W	Description	Default
7	Hp_mdix	R/W	=1, HP Auto MDI/MDI-X mode =0, Micrel Auto MDI/MDI-X mode	1 Note: Only port 2 is PHY ports. This bit is not applicable to port 1 and port 3 (MII).
6	Reserved	RO	Reserved Do not change the default value.	0
5	Polrvs	RO	=1, Polarity is reversed =0, Polarity is not reversed	0 Note: This bit is not applicable to port 1 and port 3 (MII). This bit is only valid for 10BT
4	Transmit Flow Control Enable	RO	=1, Transmit flow control feature is active =0, Transmit flow control feature is inactive	0
3	Receive Flow Control Enable	RO	=1, Receive flow control feature is active =0, Receive flow control feature is inactive	0
2	Operation Speed	RO	=1, Link speed is 100Mbps =0, Link speed is 10Mbps	0
1	Operation Duplex	RO	=1, Link duplex is full =0, Link duplex is half	0
0	Far-end Fault	RO	=1, Far-end fault status detected =0, No Far-end fault status detected	0 This bit is applicable to port 2 only.

Register 67 (0x43): Reset

Bit	Name	R/W	Description	Default
4	Software Reset	R/W	=1, Software reset =0, Clear Note: Software reset will reset all registers to the initial values of the power-on reset or warm reset (keep the strap values).	0
0	PCS Reset	R/W	=1, PCS reset is used when is doing software reset for a compelete reset =0, Clear Note: PCS reset will reset the state machine and clock domain in PHY's PCS layer.	0

Downloaded from Arrow.com.

Advanced Control Registers (Registers 96-198)

The IPv4/IPv6 TOS Priority Control Registers implement a fully decoded, 128-bit DSCP (Differentiated Services Code Point) register set that is used to determine priority from the ToS (Type of Service) field in the IP header. The most significant 6 bits of the ToS field are fully decoded into 64 possibilities, and the singular code that results is compared against the corresponding bits in the DSCP register to determine the priority.

Register 96 (0x60): TOS Priority Control Register 0

Bit	Name	R/W	Description	Default
7-6	DSCP[7:6]	R/W	The value in this field is used as the frame's priority when bits [7:2] of the frame's IP TOS/DiffServ/Traffic Class value is 0x03.	00
5-4	DSCP[5:4]	R/W	The value in this field is used as the frame's priority when bits [7:2] of the frame's IP TOS/DiffServ/Traffic Class value is 0x02.	00
3-2	DSCP[3:2]	R/W	The value in this field is used as the frame's priority when bits [7:2] of the frame's IP TOS/DiffServ/Traffic Class value is 0x01.	00
1-0	DSCP[1:0]	R/W	The value in this field is used as the frame's priority when bits [7:2] of the frame's IP TOS/DiffServ/Traffic Class value is 0x00.	00

Register 97 (0x61): TOS Priority Control Register 1

Bit	Name	R/W	Description	Default
7-6	DSCP[15:14]	R/W	The value in this field is used as the frame's priority when bits [7:2] of the frame's IP TOS/DiffServ/Traffic Class value is 0x07.	00
5-4	DSCP[13:12]	R/W	The value in this field is used as the frame's priority when bits [7:2] of the frame's IP TOS/DiffServ/Traffic Class value is 0x06.	00
3-2	DSCP[11:10]	R/W	The value in this field is used as the frame's priority when bits [7:2] of the frame's IP TOS/DiffServ/Traffic Class value is 0x05.	00
1-0	DSCP[9:8]	R/W	The value in this field is used as the frame's priority when bits [7:2] of the frame's IP TOS/DiffServ/Traffic Class value is 0x04.	00

Register 98 (0x62): TOS Priority Control Register 2

Bit	Name	R/W	Description	Default
7-6	DSCP[23:22]	R/W	The value in this field is used as the frame's priority when bits [7:2] of the frame's IP TOS/DiffServ/Traffic Class value is 0x0B.	00
5-4	DSCP[21:20]	R/W	The value in this field is used as the frame's priority when bits [7:2] of the frame's IP TOS/DiffServ/Traffic Class value is 0x0A.	00
3-2	DSCP[19:18]	R/W	The value in this field is used as the frame's priority when bits [7:2] of the frame's IP TOS/DiffServ/Traffic Class value is 0x09.	00
1-0	DSCP[17:16]	R/W	The value in this field is used as the frame's priority when bits [7:2] of the frame's IP TOS/DiffServ/Traffic Class value is 0x08.	00

Register 99 (0x63): TOS Priority Control Register 3

Bit	Name	R/W	Description	Default
7-6	DSCP[31:30]	R/W	The value in this field is used as the frame's priority when bits [7:2] of the frame's IP TOS/DiffServ/Traffic Class value is 0x0F.	00
5-4	DSCP[29:28]	R/W	The value in this field is used as the frame's priority when bits [7:2] of the frame's IP TOS/DiffServ/Traffic Class value is 0x0E.	00
3-2	DSCP[27:26]	R/W	The value in this field is used as the frame's priority when bits [7:2] of the frame's IP TOS/DiffServ/Traffic Class value is 0x0D.	00
1-0	DSCP[25:24]	R/W	The value in this field is used as the frame's priority when bits [7:2] of the frame's IP TOS/DiffServ/Traffic Class value is 0x0C.	00

Downloaded from Arrow.com.

Register 100 (0x64): TOS Priority Control Register 4

Bit	Name	R/W	Description	Default
7-6	DSCP[39:38]	R/W	The value in this field is used as the frame's priority when bits [7:2] of the frame's IP TOS/DiffServ/Traffic Class value is 0x13.	00
5-4	DSCP[37:36]	R/W	The value in this field is used as the frame's priority when bits [7:2] of the frame's IP TOS/DiffServ/Traffic Class value is 0x12.	00
3-2	DSCP[35:34]	R/W	The value in this field is used as the frame's priority when bits [7:2] of the frame's IP TOS/DiffServ/Traffic Class value is 0x11.	00
1-0	DSCP[33:32]	R/W	The value in this field is used as the frame's priority when bits [7:2] of the frame's IP TOS/DiffServ/Traffic Class value is 0x10.	00

Register 101 (0x65): TOS Priority Control Register 5

Bit	Name	R/W	Description	Default
7-6	DSCP[47:46]	R/W	The value in this field is used as the frame's priority when bits [7:2] of the frame's IP TOS/DiffServ/Traffic Class value is 0x17.	00
5-4	DSCP[45:44]	R/W	The value in this field is used as the frame's priority when bits [7:2] of the frame's IP TOS/DiffServ/Traffic Class value is 0x16.	00
3-2	DSCP[43:42]	R/W	The value in this field is used as the frame's priority when bits [7:2] of the frame's IP TOS/DiffServ/Traffic Class value is 0x15.	00
1-0	DSCP[41:40]	R/W	The value in this field is used as the frame's priority when bits [7:2] of the frame's IP TOS/DiffServ/Traffic Class value is 0x14.	00

Register 102 (0x66): TOS Priority Control Register 6

Bit	Name	R/W	Description	Default
7-6	DSCP[55:54]	R/W	The value in this field is used as the frame's priority when bits [7:2] of the frame's IP TOS/DiffServ/Traffic Class value is 0x1B.	00
5-4	DSCP[53:52]	R/W	The value in this field is used as the frame's priority when bits [7:2] of the frame's IP TOS/DiffServ/Traffic Class value is 0x1A.	00
3-2	DSCP[51:50]	R/W	The value in this field is used as the frame's priority when bits [7:2] of the frame's IP TOS/DiffServ/Traffic Class value is 0x19.	00
1-0	DSCP[49:48]	R/W	The value in this field is used as the frame's priority when bits [7:2] of the frame's IP TOS/DiffServ/Traffic Class value is 0x18.	00

Register 103 (0x67): TOS Priority Control Register 7

Bit	Name	R/W	Description	Default
7-6	DSCP[63:62]	R/W	The value in this field is used as the frame's priority when bits [7:2] of the frame's IP TOS/DiffServ/Traffic Class value is 0x1F.	00
5-4	DSCP[61:60]	R/W	The value in this field is used as the frame's priority when bits [7:2] of the frame's IP TOS/DiffServ/Traffic Class value is 0x1E.	00
3-2	DSCP[59:58]	R/W	The value in this field is used as the frame's priority when bits [7:2] of the frame's IP TOS/DiffServ/Traffic Class value is 0x1D.	00
1-0	DSCP[57:56]	R/W	The value in this field is used as the frame's priority when bits [7:2] of the frame's IP TOS/DiffServ/Traffic Class value is 0x1C.	00

Downloaded from Arrow.com.

Register 104 (0x68): TOS Priority Control Register 8

Bit	Name	R/W	Description	Default
7-6	DSCP[71:70]	R/W	The value in this field is used as the frame's priority when bits [7:2] of the frame's IP TOS/DiffServ/Traffic Class value is 0x23.	00
5-4	DSCP[69:68]	R/W	The value in this field is used as the frame's priority when bits [7:2] of the frame's IP TOS/DiffServ/Traffic Class value is 0x22.	00
3-2	DSCP[67:66]	R/W	The value in this field is used as the frame's priority when bits [7:2] of the frame's IP TOS/DiffServ/Traffic Class value is 0x21.	00
1-0	DSCP[65:64]	R/W	The value in this field is used as the frame's priority when bits [7:2] of the frame's IP TOS/DiffServ/Traffic Class value is 0x20.	00

Register 105 (0x69): TOS Priority Control Register 9

Bit	Name	R/W	Description	Default
7-6	DSCP[79:78]	R/W	The value in this field is used as the frame's priority when bits [7:2] of the frame's IP TOS/DiffServ/Traffic Class value is 0x27.	00
5-4	DSCP[77:76]	R/W	The value in this field is used as the frame's priority when bits [7:2] of the frame's IP TOS/DiffServ/Traffic Class value is 0x26.	00
3-2	DSCP[75:74]	R/W	The value in this field is used as the frame's priority when bits [7:2] of the frame's IP TOS/DiffServ/Traffic Class value is 0x25.	00
1-0	DSCP[73:72]	R/W	The value in this field is used as the frame's priority when bits [7:2] of the frame's IP TOS/DiffServ/Traffic Class value is 0x24.	00

Register 106 (0x6A): TOS Priority Control Register 10

Bit	Name	R/W	Description	Default
7-6	DSCP[87:86]	R/W	The value in this field is used as the frame's priority when bits [7:2] of the frame's IP TOS/DiffServ/Traffic Class value is 0x2B.	00
5-4	DSCP[85:84]	R/W	The value in this field is used as the frame's priority when bits [7:2] of the frame's IP TOS/DiffServ/Traffic Class value is 0x2A.	00
3-2	DSCP[83:82]	R/W	The value in this field is used as the frame's priority when bits [7:2] of the frame's IP TOS/DiffServ/Traffic Class value is 0x29.	00
1-0	DSCP[81:80]	R/W	The value in this field is used as the frame's priority when bits [7:2] of the frame's IP TOS/DiffServ/Traffic Class value is 0x28.	00

Register 107 (0x6B): TOS Priority Control Register 11

Bit	Name	R/W	Description	Default
7-6	DSCP[95:94]	R/W	The value in this field is used as the frame's priority when bits [7:2] of the frame's IP TOS/DiffServ/Traffic Class value is 0x2F.	00
5-4	DSCP[93:92]	R/W	The value in this field is used as the frame's priority when bits [7:2] of the frame's IP TOS/DiffServ/Traffic Class value is 0x2E.	00
3-2	DSCP[91:90]	R/W	The value in this field is used as the frame's priority when bits [7:2] of the frame's IP TOS/DiffServ/Traffic Class value is 0x2D.	00
1-0	DSCP[89:88]	R/W	The value in this field is used as the frame's priority when bits [7:2] of the frame's IP TOS/DiffServ/Traffic Class value is 0x2C.	00

Downloaded from Arrow.com.

Register 108 (0x6C): TOS Priority Control Register 12

Bit	Name	R/W	Description	Default
7-6	DSCP[103:102]	R/W	The value in this field is used as the frame's priority when bits [7:2] of the frame's IP TOS/DiffServ/Traffic Class value is 0x33.	00
5-4	DSCP[101:100]	R/W	The value in this field is used as the frame's priority when bits [7:2] of the frame's IP TOS/DiffServ/Traffic Class value is 0x32.	00
3-2	DSCP[99:98]	R/W	The value in this field is used as the frame's priority when bits [7:2] of the frame's IP TOS/DiffServ/Traffic Class value is 0x31.	00
1-0	DSCP[97:96]	R/W	The value in this field is used as the frame's priority when bits [7:2] of the frame's IP TOS/DiffServ/Traffic Class value is 0x30.	00

Register 109 (0x6D): TOS Priority Control Register 13

Bit	Name	R/W	Description	Default
7-6	DSCP[111:110]	R/W	The value in this field is used as the frame's priority when bits [7:2] of the frame's IP TOS/DiffServ/Traffic Class value is 0x37.	00
5-4	DSCP[109:108]	R/W	The value in this field is used as the frame's priority when bits [7:2] of the frame's IP TOS/DiffServ/Traffic Class value is 0x36.	00
3-2	DSCP[107:106]	R/W	The value in this field is used as the frame's priority when bits [7:2] of the frame's IP TOS/DiffServ/Traffic Class value is 0x35.	00
1-0	DSCP[105:104]	R/W	The value in this field is used as the frame's priority when bits [7:2] of the frame's IP TOS/DiffServ/Traffic Class value is 0x34.	00

Register 110 (0x6E): TOS Priority Control Register 14

Bit	Name	R/W	Description	Default
7-6	DSCP[119:118]	R/W	The value in this field is used as the frame's priority when bits [7:2] of the frame's IP TOS/DiffServ/Traffic Class value is 0x3B.	00
5-4	DSCP[117:116]	R/W	The value in this field is used as the frame's priority when bits [7:2] of the frame's IP TOS/DiffServ/Traffic Class value is 0x3A.	00
3-2	DSCP[115:114]	R/W	The value in this field is used as the frame's priority when bits [7:2] of the frame's IP TOS/DiffServ/Traffic Class value is 0x39.	00
1-0	DSCP[113:112]	R/W	The value in this field is used as the frame's priority when bits [7:2] of the frame's IP TOS/DiffServ/Traffic Class value is 0x38.	00

Register 111 (0x6F): TOS Priority Control Register 15

Bit	Name	R/W	Description	Default
7-6	DSCP[127:126]	R/W	The value in this field is used as the frame's priority when bits [7:2] of the frame's IP TOS/DiffServ/Traffic Class value is 0x3F.	00
5-4	DSCP[125:124]	R/W	The value in this field is used as the frame's priority when bits [7:2] of the frame's IP TOS/DiffServ/Traffic Class value is 0x3E.	00
3-2	DSCP[123:122]	R/W	The value in this field is used as the frame's priority when bits [7:2] of the frame's IP TOS/DiffServ/Traffic Class value is 0x3D.	00
1-0	DSCP[121:120]	R/W	The value in this field is used as the frame's priority when bits [7:2] of the frame's IP TOS/DiffServ/Traffic Class value is 0x3C.	00

Downloaded from Arrow.com.

Registers 112 to 117

Registers 112 to 117 contain the switch engine's MAC address. This 48-bit address is used as the Source Address for the MAC's full duplex flow control (PAUSE) frame.

Register 112 (0x70): MAC Address Register 0

Bit	Name	R/W	Description	Default
7-0	MACA[47:40]	R/W		0x00

Register 113 (0x71): MAC Address Register 1

Bit	Name	R/W	Description	Default
7-0	MACA[39:32]	R/W		0x10

Register 114 (0x72): MAC Address Register 2

Bit	Name	R/W	Description	Default
7-0	MACA[31:24]	R/W		0xA1

Register 115 (0x73): MAC Address Register 3

Bit	Name	R/W	Description	Default
7-0	MACA[23:16]	R/W		0xFF

Register 116 (0x74): MAC Address Register 4

Bit	Name	R/W	Description	Default
7-0	MACA[15:8]	R/W		0xFF

Register 117 (0x75): MAC Address Register 5

Bit	Name	R/W	Description	Default
7-0	MACA[7:0]	R/W		0xFF

Registers 118 to 120

Registers 118 to 120 are User Defined Registers (UDRs). These are general purpose read/write registers that can be used to pass user defined control and status information between the KSZ8873 and the external processor.

Register 118 (0x76): User Defined Register 1

Bit	Name	R/W	Description	Default
7-0	UDR1	R/W		0x00

Register 119 (0x77): User Defined Register 2

Bit	Name	R/W	Description	Default
7-0	UDR2	R/W		0x00

Register 120 (0x78): User Defined Register 3

Bit	Name	R/W	Description	Default
7-0	UDR3	R/W		0x00

Registers 121 to 131

Registers 121 to 131 provide read and write access to the static MAC address table, VLAN table, dynamic MAC address table, and MIB counters.

Register 121 (0x79): Indirect Access Control 0

Bit	Name	R/W	Description	Default
7-5	Reserved	R/W	Reserved Do not change the default values.	000

Downloaded from Arrow.com.

Bit	Name	R/W	Description	Default
4	Read High / Write Low	R/W	=1, Read cycle =0, Write cycle	0
3-2	Table Select	R/W	=00, Static MAC address table selected =01, VLAN table selected =10, Dynamic MAC address table selected =11, MIB counter selected	00
1-0	Indirect Address High	R/W	Bits [9:8] of indirect address	00

Register 122 (0x7A): Indirect Access Control 1

Bit	Name	R/W	Description	Default
7-0	Indirect Address Low	R/W	Bits [7:0] of indirect address	0000_0000

Note: A write to register 122 triggers the read/write command. Read or write access is determined by register 121 bit 4.

Register 123 (0x7B): Indirect Data Register 8

Bit	Name	R/W	Description	Default
7	CPU Read Status	RO	This bit is applicable only for dynamic MAC address table and MIB counter reads. =1, Read is still in progress =0, Read has completed	0
6-3	Reserved	RO	Reserved	0000
2-0	Indirect Data [66:64]	RO	Bits [66:64] of indirect data	000

Register 124 (0x7C): Indirect Data Register 7

Bit	Name	R/W	Description	Default
7-0	Indirect Data [63:56]	R/W	Bits [63:56] of indirect data	0000_0000

Register 125 (0x7D): Indirect Data Register 6

Bit	Name	R/W	Description	Default
7-0	Indirect Data [55:48]	R/W	Bits [55:48] of indirect data	0000_0000

Register 126 (0x7E): Indirect Data Register 5

Bit	Name	R/W	Description	Default
7-0	Indirect Data [47:40]	R/W	Bits [47:40] of indirect data	0000_0000

Register 127 (0x7F): Indirect Data Register 4

Bit	Name	R/W	Description	Default
7-0	Indirect Data [39:32]	R/W	Bits [39:32] of indirect data	0000_0000

Register 128 (0x80): Indirect Data Register 3

Bit	Name	R/W	Description	Default
7-0	Indirect Data [31:24]	R/W	Bits [31:24] of indirect data	0000_0000

Downloaded from Arrow.com.

Register 129 (0x81): Indirect Data Register 2

Bit	Name	R/W	Description	Default
7-0	Indirect Data [23:16]	R/W	Bits [23:16] of indirect data	0000_0000

Register 130 (0x82): Indirect Data Register 1

Bit	Name	R/W	Description	Default
7-0	Indirect Data [15:8]	R/W	Bits [15:8] of indirect data	0000_0000

Register 131 (0x83): Indirect Data Register 0

Bit	Name	R/W	Description	Default
7-0	Indirect Data [7:0]	R/W	Bits [7:0] of indirect data	0000_0000

Register 147~142(0x93~0x8E): Station Address 1 MACA1

Register 153~148 (0x99~0x94): Station Address 2 MACA2

Bit	Name	R/W	Description	Default
47-0	Station address	R/W	48-bit Station address MACA1 and MACA2. Note: This address is used for self MAC address filtering, see the port register control 5 bit [6,5] for detail.	48'h0 Note: the MSB bit[47-40] of the MAC is the MSB of register 147 and 153. The LSB bit[7-0] of MAC is the LSB of register 142 and 148.

Register 154[6:0] (0x9A): Port 1 Q0 Egress data rate limit

Register 158[6:0] (0x9E): Port 2 Q0 Egress data rate limit

Register 162[6:0] (0xA2): Port 3 Q0 Egress data rate limit

Bit	Name	R/W	Description	Default
7	Egress Rate Limit Flow Control Enable	R/W	=1, Enable egress rate limit flow control. =0, Disable	0
6-0	Q0 Egress Data Rate limit	R/W	**Egress data rate limit for priority 0 frames** Egress traffic from this priority queue is shaped according to the ingress Data Rate Limit Table.	0

Register 155[6:0] (0x9B): Port 1 Q1 Egress data rate limit

Register 159[6:0] (0x9F): Port 2 Q1 Egress data rate limit

Register 163[6:0] (0xA3): Port 3 Q1 Egress data rate limit

Bit	Name	R/W	Description	Default
7	Reserved	R/W	Reserved Do not change the default values.	0
6-0	Q1 Egress data Rate limit	R/W	**Egress data rate limit for priority 1 frames** Egress traffic from this priority queue is shaped according to the ingress Data Rate Limit Table.	0

Downloaded from Arrow.com.

Register 156[6:0] (0x9C): Port 1 Q2 Egress data rate limit

Register 160[6:0] (0xA0): Port 2 Q2 Egress data rate limit

Register 164[6:0] (0xA4): Port 3 Q2 Egress data rate limit

Bit	Name	R/W	Description	Default
7	Reserved	R/W	Reserved Do not change the default values.	0
6-0	Q2 Egress Data Rate limit	R/W	**Egress data rate limit for priority 2 frames** Egress traffic from this priority queue is shaped according to the ingress Data Rate Limit Table.	0

Register 157[6:0] (0x9D): Port 1 Q3 Egress data rate limit

Register 161[6:0] (0xA1): Port 2 Q3 Egress data rate limit

Register 165[6:0] (0xA5): Port 3 Q3 Egress data rate limit

Bit	Name	R/W	Description	Default
7	Reserved	R/W	Reserved Do not change the default values.	0
6-0	Q3 Egress Data Rate limit	R/W	**Egress data rate limit for priority 3 frames** Egress traffic from this priority queue is shaped according to the ingress Data Rate Limit Table.	0

Register 166 (0xA6): KSZ8873 Family Mode Indicator

Bit	Name	RO	Description	Default
7-0	KSZ8873 Family Mode Indicator	RO	bit7: 1: 2 MII mode bit6: 1: 48P pkg of 2 PHY mode bit5: 1: Port 1 RMII 0: Port 1 MII bit4: 1: Port 3 RMII 0: Port 3 MII bit3: 1: Port 1 MAC MII 0: Port 1 PHY MII bit2: 1: Port 3 MAC MII 0: Port 3 PHY MII bit1: 1: Port 1 Copper 0: Port 1 Fiber bit0: 1: Port 2 Copper 0: Port 2 Fiber	Ox83 for MML part

Register 167 (0xA7): High Priority Packet Buffer Reserved for Q3

Bit	Name	RW	Description	Default
7-0	Reserved	RO	Reserved Do not change the default values.	0x45

Register 168 (0xA8): High Priority Packet Buffer Reserved for Q2

Bit	Name	RW	Description	Default
7-0	Reserved	RO	Reserved Do not change the default values.	0x35

Register 169 (0xA9): High Priority Packet Buffer Reserved for Q1

Bit	Name	RW	Description	Default
7-0	Reserved	RO	Reserved Do not change the default values.	0x25

Downloaded from Arrow.com.

Register 170 (0xAA): High Priority Packet Buffer Reserved for Q0

Bit	Name	RW	Description	Default
7-0	Reserved	RO	Reserved Do not change the default values.	0x15

Register 171 (0xAB): PM Usage Flow Control Select Mode 1

Bit	Name	R/W	Description	Default
7	Reserved	RO	Reserved Do not change the default values.	0
6	Reserved	RO	Reserved Do not change the default values.	1
5-0	Reserved	RO	Reserved Do not change the default values.	0x18

Register 172 (0xAC): PM Usage Flow Control Select Mode 2

Bit	Name	R/W	Description	Default
7-6	Reserved	RO	Reserved Do not change the default values.	0
5-0	Reserved	RO	Reserved Do not change the default values.	0x10

Register 173 (0xAD): PM Usage Flow Control Select Mode 3

Bit	Name	R/W	Description	Default
7-6	Reserved	RO	Reserved Do not change the default values.	00
5-0	Reserved	RO	Reserved Do not change the default values.	0x08

Register 174 (0xAE): PM Usage Flow Control Select Mode 4

Bit	Name	R/W	Description	Default
7-4	Reserved	RO	Reserved Do not change the default values.	0
3-0	Reserved	RO	Reserved Do not change the default values.	0x05

Register 175 (0xAF): TXQ Split for Q3 in Port 1

Bit	Name	R/W	Description	Default
7	Priority Select	R/W	0 = enable straight priority with Reg 176/177/178 bits[7]=0 and Reg 5 bit[3]=0 for higher priority first 1= priority ratio is 8:4:2:1 for 4 queues and 2:1 for 2 queues with Reg 176/177/178 bits[7]=1.	1
6:0	Reserved	RO	Reserved Do not change the default values.	8

Register 176 (0xB0): TXQ Split for Q2 in Port 1

Bit	Name	R/W	Description	Default
7	Priority Select	R/W	0 = enable straight priority with Reg 175/177/178 bits[7]=0 and Reg 5 bit[3]=0 for higher priority first 1= priority ratio is 8:4:2:1 for 4 queues and 2:1 for 2 queues with	1

Downloaded from Arrow.com.

			Reg 175/177/178 bits[7]=1.	
6:0	Reserved	RO	Reserved Do not change the default values.	4

Register 177 (0xB1): TXQ Split for Q1 in Port 1

Bit	Name	R/W	Description	Default
7	Priority Select	R/W	0 = enable straight priority with Reg 175/176/178 bits[7]=0 and Reg 5 bit[3]=0 for higher priority first 1= priority ratio is 8:4:2:1 for 4 queues and 2:1 for 2 queues with Reg 175/176/178 bits[7]=1.	1
6:0	Reserved	RO	Reserved Do not change the default values.	2

Register 178 (0xB2): TXQ Split for Q0 in Port 1

Bit	Name	R/W	Description	Default
7	Priority Select	R/W	0 = enable straight priority with Reg 175/176/177 bits[7]=0 and Reg 5 bit[3]=0 for higher priority first 1= priority ratio is 8:4:2:1 for 4 queues and 2:1 for 2 queues with Reg 175/176/177 bits[7]=1.	1
6:0	Reserved	RO	Reserved Do not change the default values.	1

Register 179 (0xB3): TXQ Split for Q3 in Port 2

Bit	Name	R/W	Description	Default
7	Priority Select	R/W	0 = enable straight priority with Reg 180/181/182 bits[7]=0 and Reg 5 bit[3]=0 for higher priority first 1= priority ratio is 8:4:2:1 for 4 queues and 2:1 for 2 queues with Reg 180/181/182 bits[7]=1.	1
6:0	Reserved	RO	Reserved Do not change the default values.	8

Register 180 (0xB4): TXQ Split for Q2 in Port 2

Bit	Name	R/W	Description	Default
7	Priority Select	R/W	0 = enable straight priority with Reg 179/181/182 bits[7]=0 and Reg 5 bit[3]=0 for higher priority first 1= priority ratio is 8:4:2:1 for 4 queues and 2:1 for 2 queues with Reg 179/181/182 bits[7]=1.	1
6:0	Reserved	RO	Reserved Do not change the default values.	4

Register 181 (0xB5): TXQ Split for Q1 in Port 2

Bit	Name	R/W	Description	Default
7	Priority Select	R/W	0 = enable straight priority with Reg 179/180/182 bits[7]=0 and Reg 5 bit[3]=0 for higher priority first 1= priority ratio is 8:4:2:1 for 4 queues and 2:1 for 2 queues with Reg 179/180/182 bits[7]=1.	1
6:0	Reserved	RO	Reserved Do not change the default values.	2

Downloaded from Arrow.com.

Register 182 (0xB6): TXQ Split for Q0 in Port 2

Bit	Name	R/W	Description	Default
7	Priority Select	R/W	0 = enable straight priority with Reg 179/180/181 bits[7]=0 and Reg 5 bit[3]=0 for higher priority first 1= priority ratio is 8:4:2:1 for 4 queues and 2:1 for 2 queues with Reg 179/180/181 bits[7]=1.	1
6:0	Reserved	RO	Reserved Do not change the default values.	1

Register 183 (0xB7): TXQ Split for Q3 Port 3

Bit	Name	R/W	Description	Default
7	Priority Select	R/W	0 = enable straight priority with Reg 184/185/186 bits[7]=0 and Reg 5 bit[3]=0 for higher priority first 1= priority ratio is 8:4:2:1 for 4 queues and 2:1 for 2 queues with Reg 184/185/186 bits[7]=1.	1
6:0	Reserved	RO	Reserved Do not change the default values.	8

Register 184 (0xB8): TXQ Split for Q2 Port 3

Bit	Name	R/W	Description	Default
7	Priority Select	R/W	0 = enable straight priority with Reg 183/185/186 bits[7]=0 and Reg 5 bit[3]=0 for higher priority first 1= priority ratio is 8:4:2:1 for 4 queues and 2:1 for 2 queues with Reg 183/185/186 bits[7]=1.	1
6:0	Reserved	RO	Reserved Do not change the default values.	4

Register 185 (0xB9): TXQ Split for Q1 in Port 3

Bit	Name	R/W	Description	Default
7	Priority Select	R/W	0 = enable straight priority with Reg 183/184/186 bits[7]=0 and Reg 5 bit[3]=0 for higher priority first 1= priority ratio is 8:4:2:1 for 4 queues and 2:1 for 2 queues with Reg 183/184/186 bits[7]=1.	1
6:0	Reserved	RO	Reserved Do not change the default values.	2

Register 186 (0xBA): TXQ Split for Q0 in Port 3

Bit	Name	R/W	Description	Default
7	Priority Select	R/W	0 = enable straight priority with Reg 183/184/185 bits[7]=0 and Reg 5 bit[3]=0 for higher priority first 1= priority ratio is 8:4:2:1 for 4 queues and 2:1 for 2 queues with Reg 183/184/185 bits[7]=1.	1
6:0	Reserved	RO	Reserved Do not change the default values.	1

Register 187 (0xBB): Interrupt enable register

Bit	Name	R/W	Description	Default
7-0	Interrupt	R/W	Interrupt enable register corresponding to bits in Register 188	0x00

Downloaded from Arrow.com.

	Enable Register		**Note:** Set register 187 first and then set register 188 (W1C= Write '1' Clear) to wait the interrupt at pin 35 INTRN for the link to be changed.	

Register 188 (0xBC): Link Change Interrupt

Bit	Name	R/W	Description	Default
7	P1 or P2 Link Change (LC) Interrupt	R/W	Set to 1 when P1 or P2 link changes in analog interface (W1C).	0
6-3	Reserved	R/W	Reserved. Do not change the default values.	0
2	P3 Link Change (LC) Interrupt	R/W	Set to 1 when P3 link changes in MII interface (W1C).	0
1	P2 Link Change (LC) Interrupt	R/W	Set to 1 when P2 link changes in analog interface (W1C).	0
0	P1 MII Link Change (LC) Interrupt	R/W	Set to 1 when P1 link changes in analog interface or MII interface (W1C).	0

Register 189 (0xBD): Force Pause Off Iteration Limit Enable

Bit	Name	R/W	Description	Default
7-0	Force Pause Off Iteration Limit Enable	R/W	=1, Enable, It is 160ms before requesting to invalidate flow control. =0, Disable	0

Register 192 (0xC0): Reserved

Bit	Name	R/W	Description	Default
7-0	Reserved	RO	Reserved Do not change the default value.	0x00

Register 193 (0xC1): Internal 1.8V LDO Control

Bit	Name	R/W	Description	Default
7	Reserved	RO	Reserved Do not change the default value.	0
6	Internal 1.8V LDO Disable	R/W	=1, Disable internal 1.8V LDO =0, Enable internal 1.8V LDO	0
5-0	Reserved	RO	Reserved Do not change the default value.	0

Register 194 (0xC2): Insert SRC PVID

Bit	Name	R/W	Description	Default
7-6	Reserved	RO	Reserved Do not change the default value.	00
5	Insert SRC port 1 PVID at Port 2	R/W	1= insert SRC port 1 PVID for untagged frame at egress port 2	0
4	Insert SRC port 1 PVID at Port 3	R/W	1= insert SRC port 1 PVID for untagged frame at egress port 3	0
3	Insert SRC port 2 PVID at Port 1	R/W	1= insert SRC port 2 PVID for untagged frame at egress port 1	0
2	Insert SRC	R/W	1= insert SRC port 2 PVID for untagged frame at egress port 3	0

Downloaded from Arrow.com.

Bit	Name	R/W	Description	Default
	port 2 PVID at Port 3			
1	Insert SRC port 3 PVID at Port 1	R/W	1= insert SRC port 3 PVID for untagged frame at egress port 1	0
0	Insert SRC port 3 PVID at Port 2	R/W	1= insert SRC port 3 PVID for untagged frame at egress port 2	0

Downloaded from Arrow.com.

Register 195 (0xC3): Power Management and LED Mode

Bit	Name	R/W	Description	Default
7	CPU interface Power Down	R/W	CPU interface clock tree power down enable. =1, Enable =0, Disable Note: Power save a little bit when MII interface is used and the traffic is stopped in the power management with normal mode	0
6	Switch Power Down	R/W	Switch clock tree power down enable. =1, Enable =0, Disable Note: Power save a little bit when MII interface is used and the traffic is stopped in the power management with normal mode	0
5-4	LED Mode Selection	R/W	=00, LED0 -> Link/ACT, LED1-> Speed =01, LED0 -> Link, LED1 -> ACT =10, LED0 -> Link/ACT, LED1 -> Duplex =11, LED0 -> Link, LED1 -> Duplex	00
3	LED output mode	R/W	=1, the internal stretched energy signal from the analog module will be negated and output to LED1 and the internal device ready signal will be negated and output to LED0. =0, the LED1/LED0 pins will indicate the regular LED outputs. (Note. This is for debugging purpose.)	0
2	PLL Off Enable	R/W	=1, PLL power down enable =0, disable Note: This bit is used in Energy Detect mode with pin 27 MII_LINK_3 pull-up in the by-pass mode for saving power	0
1-0	Power Management Mode	R/W	Power management mode =00, Normal Mode =01, Energy Detection Mode =10, Software Power Down Mode =11, Power Saving Mode	00

Register 196(0xC4): Sleep Mode

Bit	Name	R/W	Description	Default
7-0	Sleep Mode	R/W	This value is used to control the minimum period the no energy event has to be detected consecutively before the device enters the low power state when the ED mode is on. The unit is 20 ms. The default go_sleep time is 1.6 seconds.	0x50

Register 198 (0xC6): Forward Invalid VID Frame and Host Mode

Bit	Name	R/W	Description	Default
7	Reserved	RO	Reserved Do not change the default value.	0
6-4	Forward Invid VID Frame	R/W	Forwarding ports for frame with invalid VID	3b'0
3	Reserved	RO	Reserved Do not change the default value.	0
2	Reserved	RO	Reserved Do not change the default value.	0
1-0	Host Interface Mode	R/W	=00, I2C master mode =01, I2C slave mode =10, SPI slave mode =11, SMI mode	Strapped value of P2LED1, P2LED0.

Downloaded from Arrow.com.

Static MAC Address Table

The KSZ8873 supports both a static and a dynamic MAC address table. In response to a Destination Address (DA) look up, the KSZ8873 searches both tables to make a packet forwarding decision. In response to a Source Address (SA) look up, only the dynamic table is searched for aging, migration and learning purposes.

The static DA look up result takes precedence over the dynamic DA look up result. If there is a DA match in both tables, the result from the static table is used. The entries in the static table will not be aged out by the KSZ8873.

The static table is accessed by a external processor via the SMI, SPI or I2C interfaces. The external processor performs all addition, modification and deletion of static MAC table entries.

Bit	Name	R/W	Description	Default
57-54	FID	R/W	Filter VLAN ID – identifies one of the 16 active VLANs	0000
53	Use FID	R/W	=1, use (FID+MAC) for static table look ups =0, use MAC only for static table look ups	0
52	Override	R/W	=1, override port setting “transmit enable=0” or “receive enable=0” setting =0, no override	0
51	Valid	R/W	=1, this entry is valid, the lookup result will be used =0, this entry is not valid	0
50-48	Forwarding Ports	R/W	These 3 bits control the forwarding port(s): 001, forward to port 1 010, forward to port 2 100, forward to port 3 011, forward to port 1 and port 2 110, forward to port 2 and port 3 101, forward to port 1 and port 3 111, broadcasting (excluding the ingress port)	000
47-0	MAC Address	R/W	48-bit MAC Address	0x0000_0000_0000

Table 11. Format of Static MAC Table (8 Entries)

Examples:

1. **Static Address Table Read (Read the 2nd Entry)**

   Write to reg. 121 (0x79) with 0x10 // Read static table selected
   Write to reg. 122 (0x7A) with 0x01 // Trigger the read operation

   Then,

   Read reg. 124 (0x7C), static table bits [57:56]

   Read reg. 125 (0x7D), static table bits [55:48]

   Read reg. 126 (0x7E), static table bits [47:40]

   Read reg. 127 (0x7F), static table bits [39:32]

   Read reg. 128 (0x80), static table bits [31:24]

   Read reg. 129 (0x81), static table bits [23:16]

   Read reg. 130 (0x82), static table bits [15:8]

   Read reg. 131 (0x83), static table bits [7:0]

Downloaded from Arrow.com.

2. Static Address Table Write (Write the 8th Entry)

Write to reg. 124 (0x7C), static table bits [57:56]
Write to reg. 125 (0x7D), static table bits [55:48]
Write to reg. 126 (0x7E), static table bits [47:40]
Write to reg. 127 (0x7F), static table bits [39:32]
Write to reg. 128 (0x80), static table bits [31:24]
Write to reg. 129 (0x81), static table bits [23:16]
Write to reg. 130 (0x82), static table bits [15:8]
Write to reg. 131 (0x83), static table bits [7:0]
Write to reg. 121 (0x79) with 0x00 // Write static table selected
Write to reg. 122 (0x7A) with 0x07 // Trigger the write operation

Downloaded from Arrow.com.

VLAN Table

The KSZ8873 uses the VLAN table to perform look ups. If 802.1Q VLAN mode is enabled (register 5, bit 7 = 1), this table will be used to retrieve the VLAN information that is associated with the ingress packet. This information includes FID (filter ID), VID (VLAN ID), and VLAN membership as described in the following table.

Bit	Name	R/W	Description	Default
19	Valid	R/W	=1, entry is valid =0, entry is invalid	1
18-16	Membership	R/W	Specify which ports are members of the VLAN. If a DA lookup fails (no match in both static and dynamic tables), the packet associated with this VLAN will be forwarded to ports specified in this field. For example, 101 means port 3 and 1 are in this VLAN.	111
15-12	FID	R/W	Filter ID. KSZ8873 supports 16 active VLANs represented by these four bit fields. FID is the mapped ID. If 802.1Q VLAN is enabled, the look up will be based on FID+DA and FID+SA.	0x0
11-0	VID	R/W	IEEE 802.1Q 12 bits VLAN ID	0x001

Table 12. Format of Static VLAN Table (16 Entries)

If 802.1Q VLAN mode is enabled, KSZ8873 will assign a VID to every ingress packet. If the packet is untagged or tagged with a null VID, the packet is assigned with the default port VID of the ingress port. If the packet is tagged with non null VID, the VID in the tag will be used. The look up process will start from the VLAN table look up. If the VID is not valid, the packet will be dropped and no address learning will take place. If the VID is valid, the FID is retrieved. The FID+DA and FID+SA lookups are performed. The FID+DA look up determines the forwarding ports. If FID+DA fails, the packet will be broadcast to all the members (excluding the ingress port) of the VLAN. If FID+SA fails, the FID+SA will be learned.

Examples:

1. VLAN Table Read (read the 3rd entry)

Write to reg. 121 (0x79) with 0x14 // Read VLAN table selected
Write to reg. 122 (0x7A) with 0x02 // Trigger the read operation

Then,

Read reg. 129 (0x81), VLAN table bits [19:16]
Read reg. 130 (0x82), VLAN table bits [15:8]
Read reg. 131 (0x83), VLAN table bits [7:0]

2. VLAN Table Write (write the 7th entry)

Write to reg. 129 (0x81), VLAN table bits [19:16]
Write to reg. 130 (0x82), VLAN table bits [15:8]
Write to reg. 131 (0x83), VLAN table bits [7:0]
Write to reg. 121 (0x79) with 0x04 // Write VLAN table selected
Write to reg. 122 (0x7A) with 0x06 // Trigger the write operation

Downloaded from Arrow.com.

Dynamic MAC Address Table

The KSZ8873 maintains the dynamic MAC address table. Read access is allowed only.

Bit	Name	R/W	Description	Default
71	Data Not Ready	RO	=1, entry is not ready, continue retrying until this bit is set to 0 =0, entry is ready	
70-67	Reserved	RO	Reserved	
66	MAC Empty	RO	=1, there is no valid entry in the table =0, there are valid entries in the table	1
65-56	No of Valid Entries	RO	Indicates how many valid entries in the table 0x3ff means 1K entries 0x001 means 2 entries 0x000 and bit 66 = 0 means 1 entry 0x000 and bit 66 = 1 means 0 entry	00_0000_0000
55-54	Time Stamp	RO	2 bits counter for internal aging	
53-52	Source Port	RO	The source port where FID+MAC is learned 00 : port 1 01 : port 2 10 : port 3	00
51-48	FID	RO	Filter ID	0x0
47-0	MAC Address	RO	48-bit MAC Address	0x0000_0000_0000

Table 13. Format of Dynamic MAC Address Table (1K Entries)

Example:

Dynamic MAC Address Table Read (read the 1st entry and retrieve the MAC table size)

Write to reg. 121 (0x79) with 0x18 // Read dynamic table selected
Write to reg. 122 (0x7A) with 0x00 // Trigger the read operation

Then,
Read reg. 123 (0x7B), bit [7] // if bit 7 = 1, restart (reread) from this register
dynamic table bits [66:64]
Read reg. 124 (0x7C), dynamic table bits [63:56]
Read reg. 125 (0x7D), dynamic table bits [55:48]
Read reg. 126 (0x7E), dynamic table bits [47:40]
Read reg. 127 (0x7F), dynamic table bits [39:32]
Read reg. 128 (0x80), dynamic table bits [31:24]
Read reg. 129 (0x81), dynamic table bits [23:16]
Read reg. 130 (0x82), dynamic table bits [15:8]
Read reg. 131 (0x83), dynamic table bits [7:0]

Downloaded from Arrow.com.

MIB (Management Information Base) Counters

The KSZ8873 provides 34 MIB counters per port. These counters are used to monitor the port activity for network management. The MIB counters have two format groups: “Per Port” and “All Port Dropped Packet.”

Bit	Name	R/W	Description	Default
31	Overflow	RO	=1, counter overflow =0, no counter overflow	0
30	Count valid	RO	=1, counter value is valid =0, counter value is not valid	0
29-0	Counter values	RO	Counter value	0

Table 14. Format of “Per Port” MIB Counters

“Per Port” MIB counters are read using indirect memory access. The base address offsets and address ranges for all three ports are:

Port 1, base is 0x00 and range is (0x00-0x1f)
Port 2, base is 0x20 and range is (0x20-0x3f)
Port 3, base is 0x40 and range is (0x40-0x5f)

Port 1 MIB counters are read using the indirect memory offsets in the following table.

Offset	Counter Name	Description
0x0	RxLoPriorityByte	Rx lo-priority (default) octet count including bad packets
0x1	RxHiPriorityByte	Rx hi-priority octet count including bad packets
0x2	RxUndersizePkt	Rx undersize packets w/ good CRC
0x3	RxFragments	Rx fragment packets w/ bad CRC, symbol errors or alignment errors
0x4	RxOversize	Rx oversize packets w/ good CRC (max: 1536 or 1522 bytes)
0x5	RxJabbers	Rx packets longer than 1522 bytes w/ either CRC errors, alignment errors, or symbol errors (depends on max packet size setting)
0x6	RxSymbolError	Rx packets w/ invalid data symbol and legal packet size.
0x7	RxCRCError	Rx packets within (64,1522) bytes w/ an integral number of bytes and a bad CRC (upper limit depends on max packet size setting)
0x8	RxAlignmentError	Rx packets within (64,1522) bytes w/ a non-integral number of bytes and a bad CRC (upper limit depends on max packet size setting)
0x9	RxControl8808Pkts	Number of MAC control frames received by a port with 88-08h in EtherType field
0xA	RxPausePkts	Number of PAUSE frames received by a port. PAUSE frame is qualified with EtherType (88-08h), DA, control opcode (00-01), data length (64B min), and a valid CRC
0xB	RxBroadcast	Rx good broadcast packets (not including error broadcast packets or valid multicast packets)
0xC	RxMulticast	Rx good multicast packets (not including MAC control frames, error multicast packets or valid broadcast packets)
0xD	RxUnicast	Rx good unicast packets
0xE	Rx64Octets	Total Rx packets (bad packets included) that were 64 octets in length
0xF	Rx65to127Octets	Total Rx packets (bad packets included) that are between 65 and 127 octets in length
0x10	Rx128to255Octets	Total Rx packets (bad packets included) that are between 128 and 255 octets in length
0x11	Rx256to511Octets	Total Rx packets (bad packets included) that are between 256 and 511 octets in length
0x12	Rx512to1023Octets	Total Rx packets (bad packets included) that are between 512 and 1023 octets in length
0x13	Rx1024to1522Octets	Total Rx packets (bad packets included) that are between 1024 and 1522 octets in length (upper limit depends on max packet size setting)
0x14	TxLoPriorityByte	Tx lo-priority good octet count, including PAUSE packets
0x15	TxHiPriorityByte	Tx hi-priority good octet count, including PAUSE packets

Downloaded from Arrow.com.

Offset	Counter Name	Description
0x16	TxLateCollision	The number of times a collision is detected later than 512 bit-times into the Tx of a packet
0x17	TxPausePkts	Number of PAUSE frames transmitted by a port
0x18	TxBroadcastPkts	Tx good broadcast packets (not including error broadcast or valid multicast packets)
0x19	TxMulticastPkts	Tx good multicast packets (not including error multicast packets or valid broadcast packets)
0x1A	TxUnicastPkts	Tx good unicast packets
0x1B	TxDeferred	Tx packets by a port for which the 1st Tx attempt is delayed due to the busy medium
0x1C	TxTotalCollision	Tx total collision, half duplex only
0x1D	TxExcessiveCollision	A count of frames for which Tx fails due to excessive collisions
0x1E	TxSingleCollision	Successfully Tx frames on a port for which Tx is inhibited by exactly one collision
0x1F	TxMultipleCollision	Successfully Tx frames on a port for which Tx is inhibited by more than one collision

Table 15. Port 1's "Per Port" MIB Counters Indirect Memory Offsets

Bit	Name	R/W	Description	Default
30-16	Reserved	N/A	Reserved	N/A
15-0	Counter Value	RO	Counter Value	0

Table 16. Format of "All Port Dropped Packet" MIB Counters

Downloaded from Arrow.com.

"All Port Dropped Packet" MIB counters are read using indirect memory access. The address offsets for these counters are shown in the following table:

Offset	Counter Name	Description
0x100	Port1 TX Drop Packets	TX packets dropped due to lack of resources
0x101	Port2 TX Drop Packets	TX packets dropped due to lack of resources
0x102	Port3 TX Drop Packets	TX packets dropped due to lack of resources
0x103	Port1 RX Drop Packets	RX packets dropped due to lack of resources
0x104	Port2 RX Drop Packets	RX packets dropped due to lack of resources
0x105	Port3 RX Drop Packets	RX packets dropped due to lack of resources

Table 17. "All Port Dropped Packet" MIB Counters Indirect Memory Offsets

Examples:

1. **MIB Counter Read (Read port 1 "Rx64Octets" Counter)**

```
Write to reg. 121 (0x79) with 0x1c        // Read MIB counters selected
Write to reg. 122 (0x7A) with 0x0e        // Trigger the read operation
```

Then

```
Read reg. 128 (0x80), overflow bit [31]        // If bit 31 = 1, there was a counter overflow
                      valid bit [30]           // If bit 30 = 0, restart (reread) from this register
                      counter bits [29:24]
Read reg. 129 (0x81), counter bits [23:16]
Read reg. 130 (0x82), counter bits [15:8]
Read reg. 131 (0x83), counter bits [7:0]
```

2. **MIB Counter Read (Read port 2 "Rx64Octets" Counter)**

```
Write to reg. 121 (0x79) with 0x1c        // Read MIB counter selected
Write to reg. 122 (0x7A) with 0x2e        // Trigger the read operation
```

Then,

```
Read reg. 128 (0x80), overflow bit [31]        // If bit 31 = 1, there was a counter overflow
                      valid bit [30]           // If bit 30 = 0, restart (reread) from this register
                      counter bits [29:24]
Read reg. 129 (0x81), counter bits [23:16]
Read reg. 130 (0x82), counter bits [15:8]
Read reg. 131 (0x83), counter bits [7:0]
```

3. **MIB Counter Read (Read "Port1 TX Drop Packets" Counter)**

```
Write to reg. 121 (0x79) with 0x1d        // Read MIB counter selected
Write to reg. 122 (0x7A) with 0x00        // Trigger the read operation
```

Then

```
Read reg. 130 (0x82), counter bits [15:8]
Read reg. 131 (0x83), counter bits [7:0]
```


Downloaded from Arrow.com.

Additional MIB Counter Information

“Per Port” MIB counters are designed as “read clear.” These counters will be cleared after they are read.

“All Port Dropped Packet” MIB counters are not cleared after they are accessed and do not indicate overflow or validity; therefore, the application must keep track of overflow and valid conditions.

To read out all the counters, the best performance over the SPI bus is (160+3)*8*200 = 260ms, where there are 160 registers, 3 overheads, 8 clocks per access, at 5MHz. In the heaviest condition, the counters will overflow in 2 minutes. It is recommended that the software read all the counters at least every 30 seconds.

A high performance SPI master is also recommended to prevent counters overflow.

Downloaded from Arrow.com.

Absolute Maximum Ratings[1]

Supply Voltage
(VDDA_1.8, VDDC) ..... –0.5V to 2.4V
(VDDA_3.3V, VDDIO)..... –0.5V to 4.0V
Input Voltage ..... –0.5V to 4.0V
Output Voltage ..... –0.5V to 4.0V
Lead Temperature (soldering, 10sec.)..... 260ºC
Storage Temperature (T_s) ..... –55ºC to 150ºC
HBM ESD Rating ..... +/-3KV

Operating Ratings[2]

Supply Voltage[3]
(VDDA_1.8, VDDC).....1.690V to 1.890V
(VDDA_3.3) .....2.5V to 3.465V
(VDDIO) .....1.71V to 3.465V
Ambient Temperature (T_A)
Commercial .....0ºC to 70ºC
Industrial .....–40ºC to 85ºC
Junction Temperature (T_J) 125ºC
Junction Thermal Resistance[4]
LQFP (θ_{JA}) 47.24ºC/W
LQFP (θ_{JC}) ……19.37ºC/W

Electrical Characteristics[5]

Current consumption is for the single 3.3V supply device only, and includes the 1.8V supply voltages (V_{DDA}, V_{DDC}) that are provided via power output pin 59(VDDCO).

Each PHY port's transformer consumes an additional 45mA @ 3.3V for 100BASE-TX and 60mA @ 3.3V for 10BASE-T at fully traffic.

Symbol	Parameter	Condition	Min	Typ	Max	Units
100BASE-TX Operation (All Ports @ 100% Utilization)						
I_{ddxio}	100BASE-TX (analog core + digital core + transceiver + digital I/O)	V_{DDA}_3.3, V_{DDIO} = 3.3V Core power is provided from the internal 1.8V LDO with input voltage VDDIO		105		mA
10BASE-T Operation (All Ports @ 100% Utilization)						
I_{ddxio}	10BASE-T (analog core + digital core + transceiver + digital I/O)	V_{DDA}_3.3, V_{DDIO} = 3.3V Core power is provided from the internal 1.8V LDO with input voltage VDDIO		86		mA
Power Management Mode (with MII/RMII in default PHY mode)						
I_{dd3}	Power Saving Mode	V_{DDA}_3.3, V_{DDIO} = 3.3V Unplug Port 1 and Port 2 Set Register 195 bit[1,0] = [1,1]		80		mA
I_{dd4}	Soft Power Down Mode	V_{DDA}_3.3, V_{DDIO} = 3.3V Set Register 195 bit[1,0] = [1,0]		5		mA
I_{dd5}	Energy Detect Mode	V_{DDA}_3.3, V_{DDIO} = 3.3V Unplug Port 1 and Port 2 Set Register 195 bit[7,0] = 0x05 with port 3 PHY mode and By-pass mode		15		mA
TTL Inputs (VDD_IO = 3.3V/2.5V/1.8V)						
V_{IH}	Input High Voltage		2.0/2.0/1.3			V
V_{IL}	Input Low Voltage				0.8/0.6/0.3	V
I_{IN}	Input Current	V_{IN} = GND ~ VDD_IO	-10		10	µA
TTL Outputs (VDD_IO = 3.3V/2.5V/1.8V)						
V_{OH}	Output High Voltage	I_{OH} = -8mA	2.4/1.9/1.5			V
V_{OL}	Output Low Voltage	I_{OL} = 8mA			0.4/0.4/0.2	V
$\|I_{OZ}\|$	Output Tri-State Leakage				10	µA
100BASE-TX Transmit (measured differentially after 1:1 transformer)						
V_O	Peak Differential Output Voltage	100Ω termination across differential output	0.95		1.05	V
V_{IMB}	Output Voltage Imbalance	100Ω termination across differential output			2	%

Downloaded from Arrow.com.

Electrical Characteristics[5] (Continued)

Symbol	Parameter	Condition	Min	Typ	Max	Units
T_r/T_f	Rise/Fall Time		3		5	ns
	Rise/Fall Time Imbalance		0		0.5	ns
	Duty Cycle Distortion				±0.5	ns
Symbol	**Parameter**	**Condition**	**Min**	**Typ**	**Max**	**Units**
	Overshoot				5	%
	Output Jitter	Peak-to-peak		0.7	1.4	ns
10BASE-T Receive						
V_{SQ}	Squelch Threshold	5MHz square wave		400		mV
10BASE-T Transmit (measured differentially after 1:1 transformer)						
V_P	Peak Differential Output Voltage	100Ω termination across differential output		2.4		V
	Output Jitter	Peak-to-peak		1.4	11	ns

Notes:

1. Exceeding the absolute maximum rating may damage the device.
2. The device is not guaranteed to function outside its operating rating.
3. The device also support single 2.5V supply
4. No (HS) heat spreader in this package.
5. T_A = 25°C. Specification for packaged product only.

Downloaded from Arrow.com.

Timing Specifications

EEPROM Timing

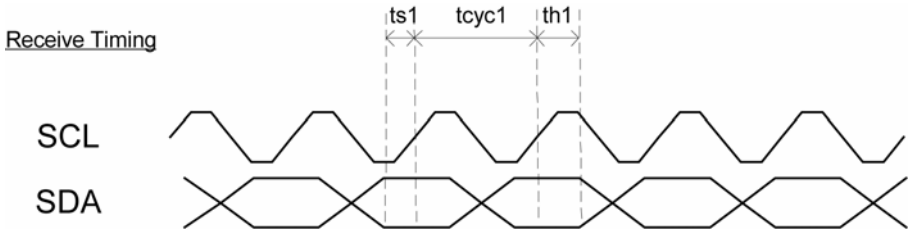

Figure 15. EEPROM Interface Input Timing Diagram

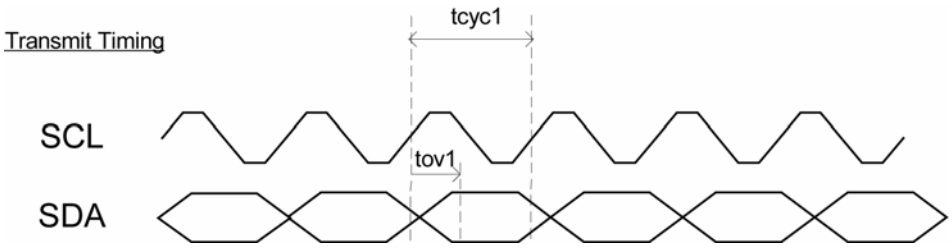

Figure 16. EEPROM Interface Output Timing Diagram

Symbols	Parameters	Min	Typ	Max	Unit
t_{cyc1}	Clock cycle		16384		ns
t_{s1}	Setup time	20			ns
t_{h1}	Hold time	20			ns
t_{ov1}	Output valid	4096	4112	4128	ns

Table 18. EEPROM Timing Parameters

Downloaded from Arrow.com.

MII Timing

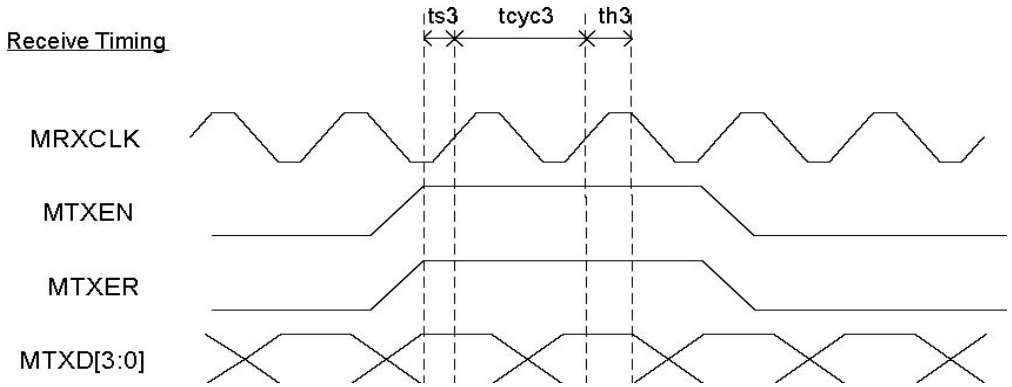

Figure 17. MAC Mode MII Timing – Data Received from MII

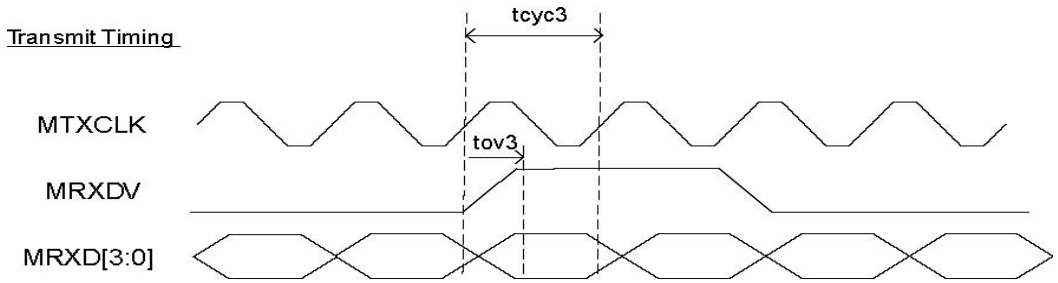

Figure 18. MAC Mode MII Timing – Data Transmitted to MII

		10Base-T/100Base-TX			
Symbol	**Parameter**	**Min**	**Typ**	**Max**	**Units**
t_{CYC3}	Clock Cycle		400/40		ns
t_{S3}	Set-Up Time	4			ns
t_{H3}	Hold Time	2			ns
t_{OV3}	Output Valid	7	11	16	ns

Table 19. MAC Mode MII Timing Parameters

Downloaded from Arrow.com.

MII Timing (Continued)

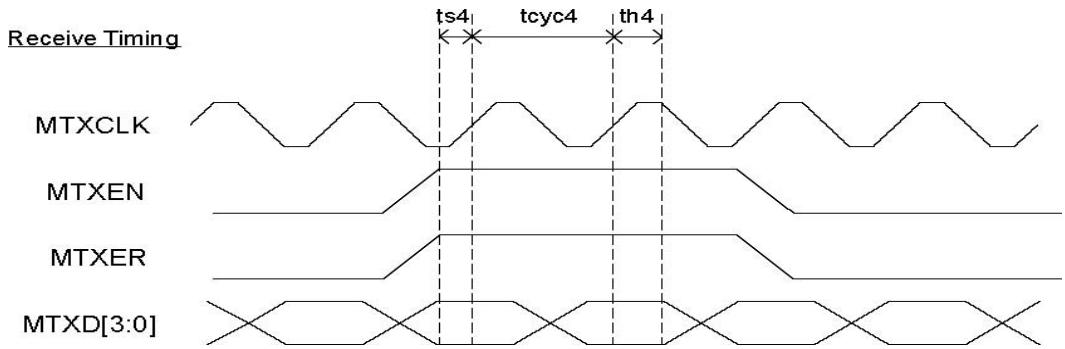

Figure 19. PHY Mode MII Timing – Data Received from MII

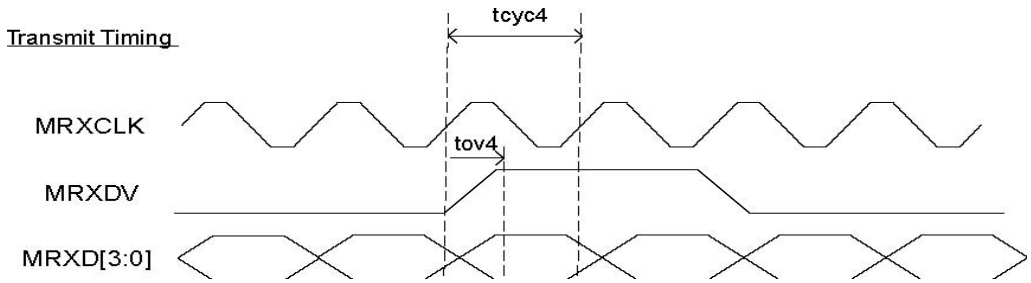

Figure 20. PHY Mode MII Timing – Data Transmitted to MII

		10BaseT/100BaseT			
Symbol	**Parameter**	**Min**	**Typ**	**Max**	**Units**
t_{CYC4}	Clock Cycle		400/40		ns
t_{S4}	Set-Up Time	10			ns
t_{H4}	Hold Time	0			ns
t_{OV4}	Output Valid	18		19	ns

Table 20. PHY Mode MII Timing Parameters

Downloaded from Arrow.com.

I²C Slave Mode Timing

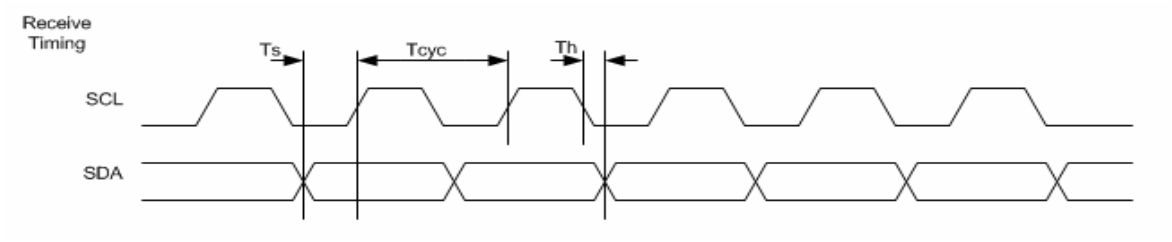

Figure 21. I2C Input Timing

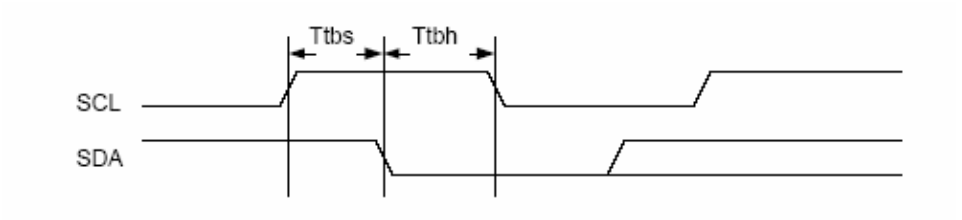

Figure 22. I2C Start Bit Timing

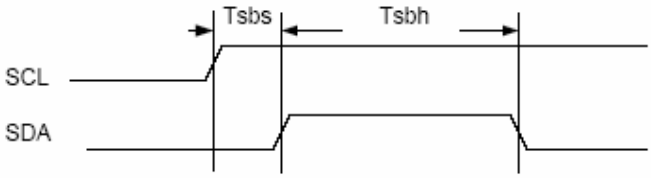

Figure 23. I2C Stop Bit Timing

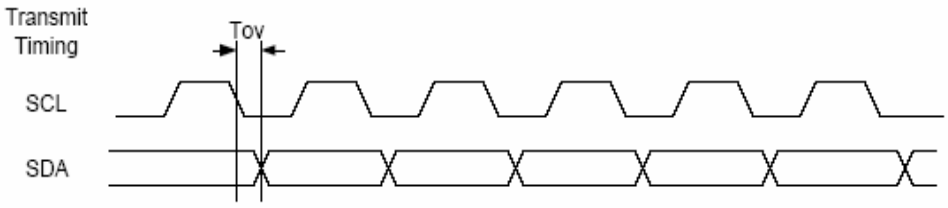

Figure 24. I2C Output Timing

Downloaded from Arrow.com.

I²C Slave Mode Timing (Continued)

Symbols	Parameters	Min	Typ	Max	Unit
Tcyc	Clock cycle	400			ns
Ts	Setup time	33		Half-cycle	ns
Th	Hold time	0			ns
Ttbs	Start bit setup time	33			ns
Ttbh	Start bit hold time	33			ns
Tsbs	Stop bit setup time	2			ns
Tsbh	Stop bit hold time	33			ns
Tov	Output Valid	64		96	ns

Table 21. I2C Timing Parameters

Note: Data is only allowed to change during SCL low time except start and stop bits.

Downloaded from Arrow.com.

SPI Timing

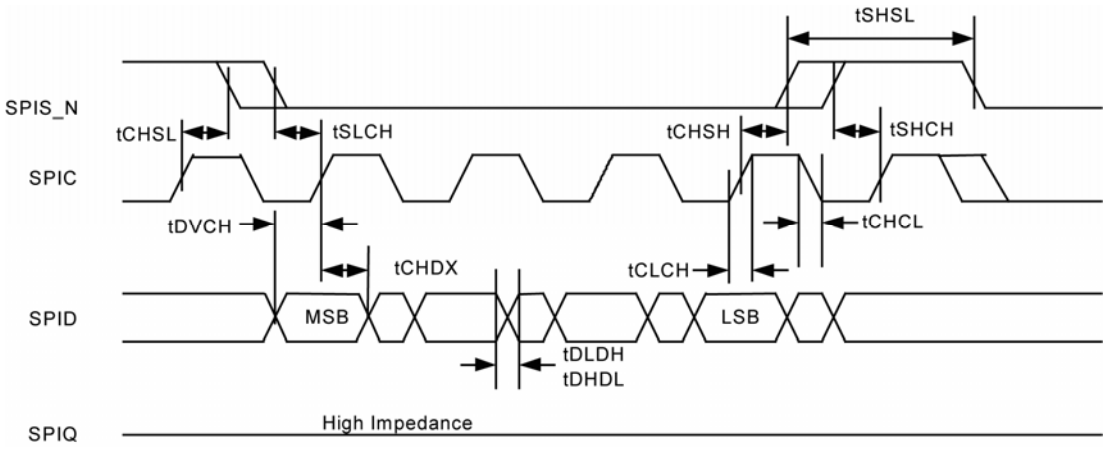

Figure 25. SPI Input Timing

Symbols	Parameters	Min	Max	Units
f_C	Clock frequency		5	MHz
t_{CHSL}	SPISN inactive hold time	90		ns
t_{SLCH}	SPISN active setup time	90		ns
t_{CHSH}	SPISN active old time	90		ns
t_{SHCH}	SPISN inactive setup time	90		ns
t_{SHSL}	SPISN deselect time	100		ns
t_{DVCH}	Data input setup time	20		ns
t_{CHDX}	Data input hold time	30		ns
t_{CLCH}	Clock rise time		1	us
t_{CHCL}	Clock fall time		1	us
t_{DLDH}	Data input rise time		1	us
t_{DHDL}	Data input fall time		1	us

Table 22. SPI Input Timing Parameters

Downloaded from Arrow.com.

SPI Timing (Continued)

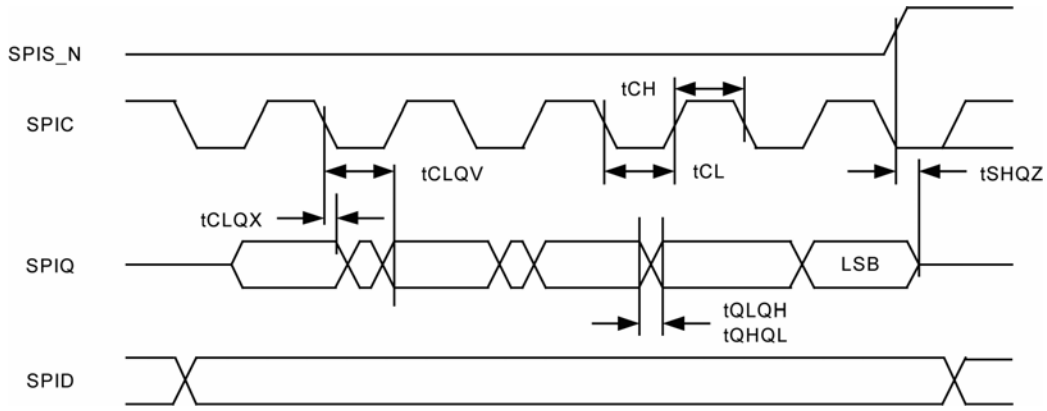

Figure 26. SPI Output Timing

Symbols	Parameters	Min	Max	Units
f_C	Clock frequency		5	MHz
t_{CLQX}	SPIQ hold time	0	0	ns
t_{CLQV}	Clock low to SPIQ valid		60	ns
t_{CH}	Clock high time	90		ns
t_{CL}	Clock low time	90		
t_{QLQH}	SPIQ rise time		50	ns
t_{QHQL}	SPIQ fall time		50	ns
t_{SHQZ}	SPIQ disable time		100	ns

Table 23. SPI Output Timing Parameters

Downloaded from Arrow.com.

Auto-Negotiation Timing

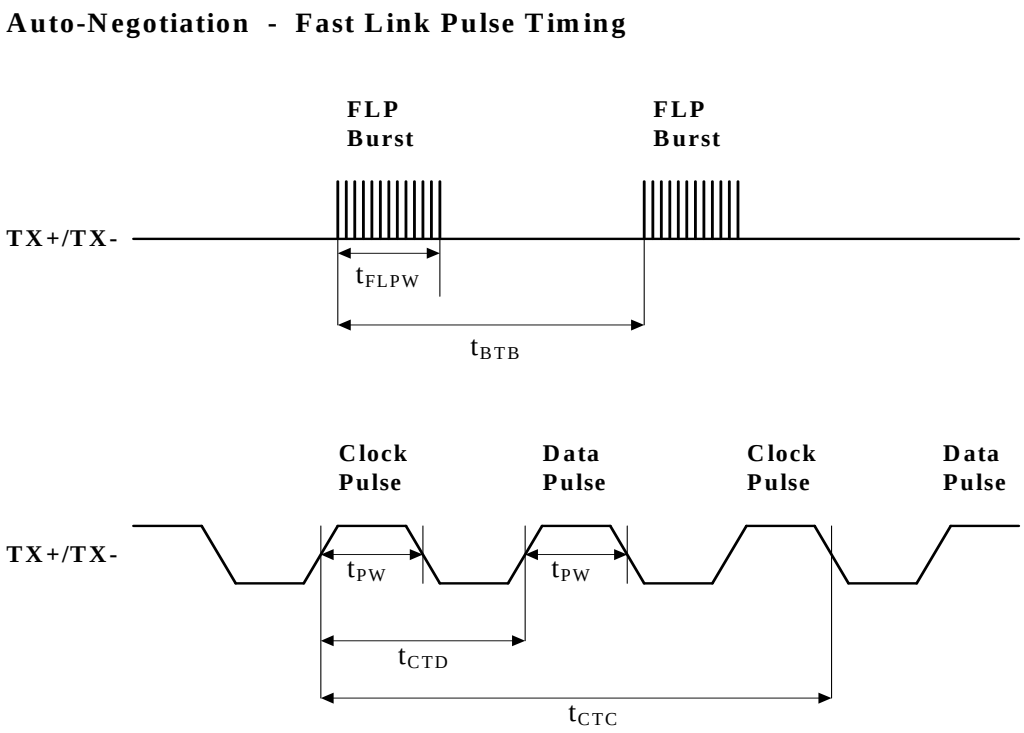

Figure 27. Auto-Negotiation Timing

Symbols	Parameters	Min	Typ	Max	Units
t_{BTB}	FLP burst to FLP burst	8	16	24	ms
t_{FLPW}	FLP burst width		2		ms
t_{PW}	Clock/Data pulse width		100		ns
t_{CTD}	Clock pulse to Data pulse	55.5	64	69.5	µs
t_{CTC}	Clock pulse to Clock pulse	111	128	139	µs
	Number of Clock/Data pulse per burst	17		33	

Table 24. Auto-Negotiation Timing Parameters

Downloaded from Arrow.com.

MDC/MDIO Timing

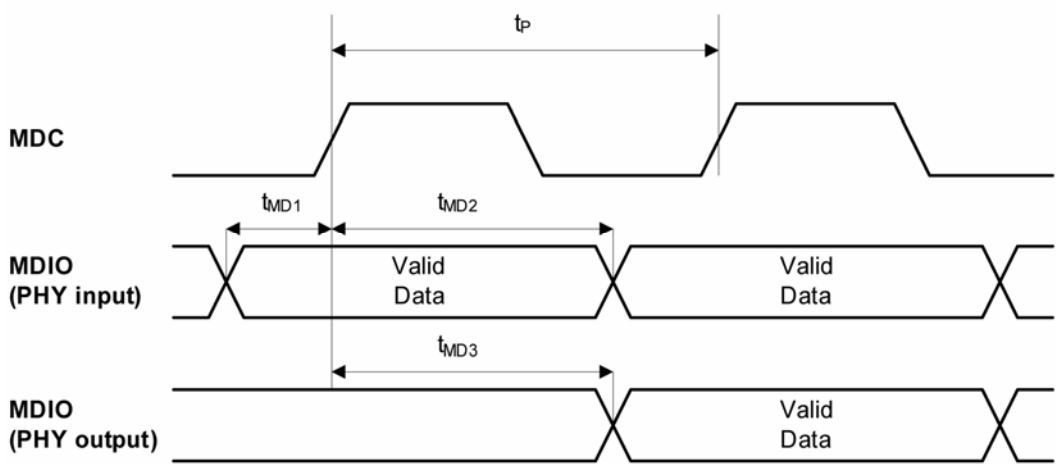

Figure 28. MDC/MDIO Timing

Timing Parameter	Description	Min	Typ	Max	Unit
t_P	MDC period		400		ns
t_{1MD1}	MDIO (PHY input) setup to rising edge of MDC	10			ns
t_{MD2}	MDIO (PHY input) hold from rising edge of MDC	4			ns
t_{MD3}	MDIO (PHY output) delay from rising edge of MDC		222		ns

Table 25. MDC/MDIO Timing Parameters

Downloaded from Arrow.com.

Reset Timing

The KSZ8873MML reset timing requirement is summarized in the following figure and table.

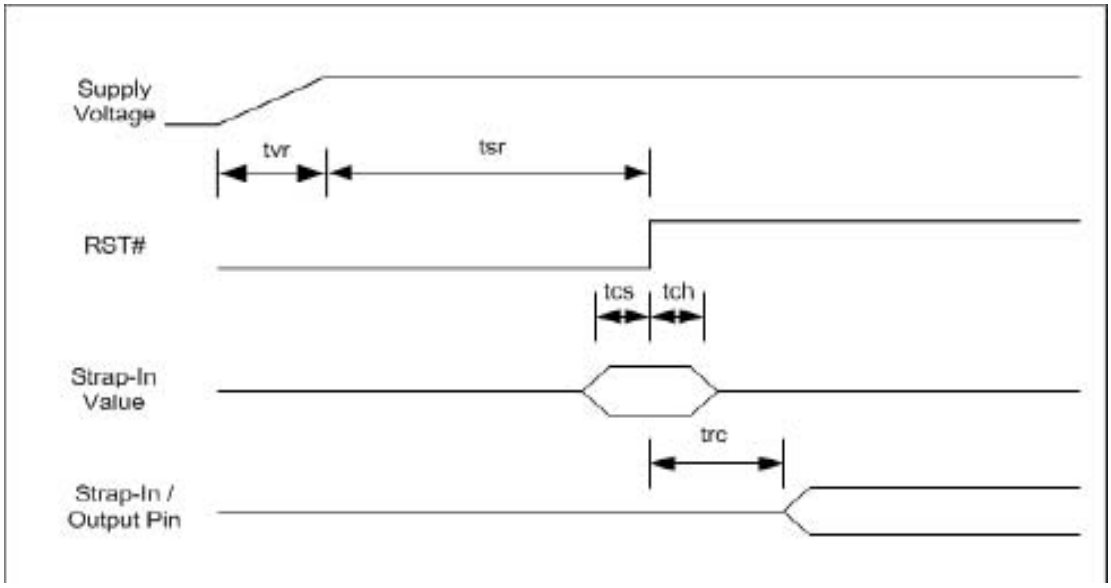

Figure 29. Reset Timing

Parameter	Description	Min	Max	Units
t_{sr}	Stable supply voltages to reset High	10		ms
t_{cs}	Configuration setup time	50		ns
t_{ch}	Configuration hold time	50		ns
t_{rc}	Reset to strap-in pin output	50		us
tvr	3.3V rise time	100		us

Table 26. Reset Timing Parameters

After the de-assertion of reset, it is recommended to wait a minimum of 100 us before starting programming on the managed interface (I2C slave, SPI slave, SMI, MIIM).

Downloaded from Arrow.com.

Reset Circuit

The reset circuit in Figure 30 is recommended for powering up the KSZ8873MML if reset is triggered only by the power supply.

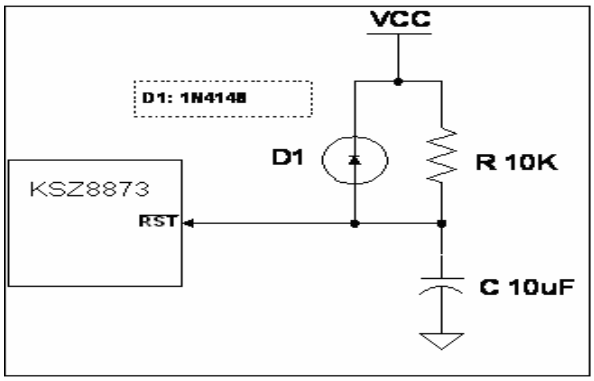

Figure 30. Recommended Reset Circuit

The reset circuit in Figure 31 is recommended for applications where reset is driven by another device (e.g., CPU, FPGA, etc),. At power-on-reset, R, C and D1 provide the necessary ramp rise time to reset the KSZ8873MML device. The RST_OUT_n from CPU/FPGA provides the warm reset after power up.

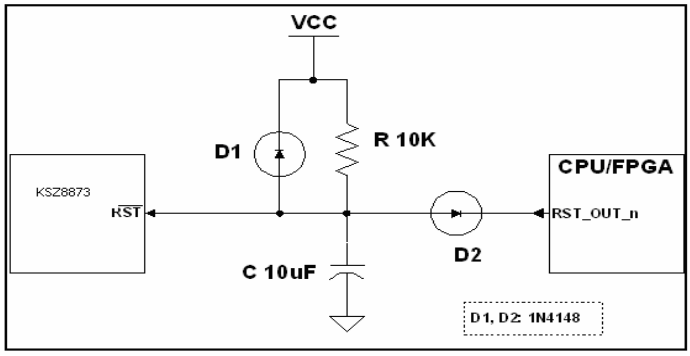

Figure 31. Recommended Reset Circuit for interfacing with CPU/FPGA Reset Output

Downloaded from Arrow.com.

Selection of Isolation Transformers

An 1:1 isolation transformer is required at the line interface. An isolation transformer with integrated common-mode choke is recommended for exceeding FCC requirements.

The following table gives recommended transformer characteristics.

Parameter	Value	Test Condition
Turns ratio	1 CT : 1 CT	
Open-circuit inductance (min.)	350μH	100mV, 100kHz, 8mA
Leakage inductance (max.)	0.4μH	1MHz (min.)
Inter-winding capacitance (max.)	12pF	
D.C. resistance (max.)	0.9Ω	
Insertion loss (max.)	1.0dB	0MHz – 65MHz
HIPOT (min.)	1500Vrms	

Table 27. Transformer Selection Criteria

Magnetic Manufacturer	Part Number	Auto MDI-X	Number of Port
Bel Fuse	S558-5999-U7	Yes	1
Bel Fuse (MagJack)	SI-46001	Yes	1
Bel Fuse (MagJack)	SI-50170	Yes	1
Delta	LF8505	Yes	1
LanKom	LF-H41S	Yes	1
Pulse	H1102	Yes	1
Pulse (low cost)	H1260	Yes	1
Datatronic	NT79075	Yes	1
Transpower	HB726	Yes	1
YCL	LF-H41S	Yes	1
TDK (Mag Jack)	TLA-6T718	Yes	1

Table 28. Qualified Single Port Magnetics

Selection of Reference Crystal

Chacteristics	Value	Units
Frequency	25.00000	MHz
Frequency tolerance (max)	±50	ppm
Load capacitance (max)	20	pF
Series resistance	40	Ω

Table 29. Typical Reference Crystal Characteristics

Downloaded from Arrow.com.

Package Information

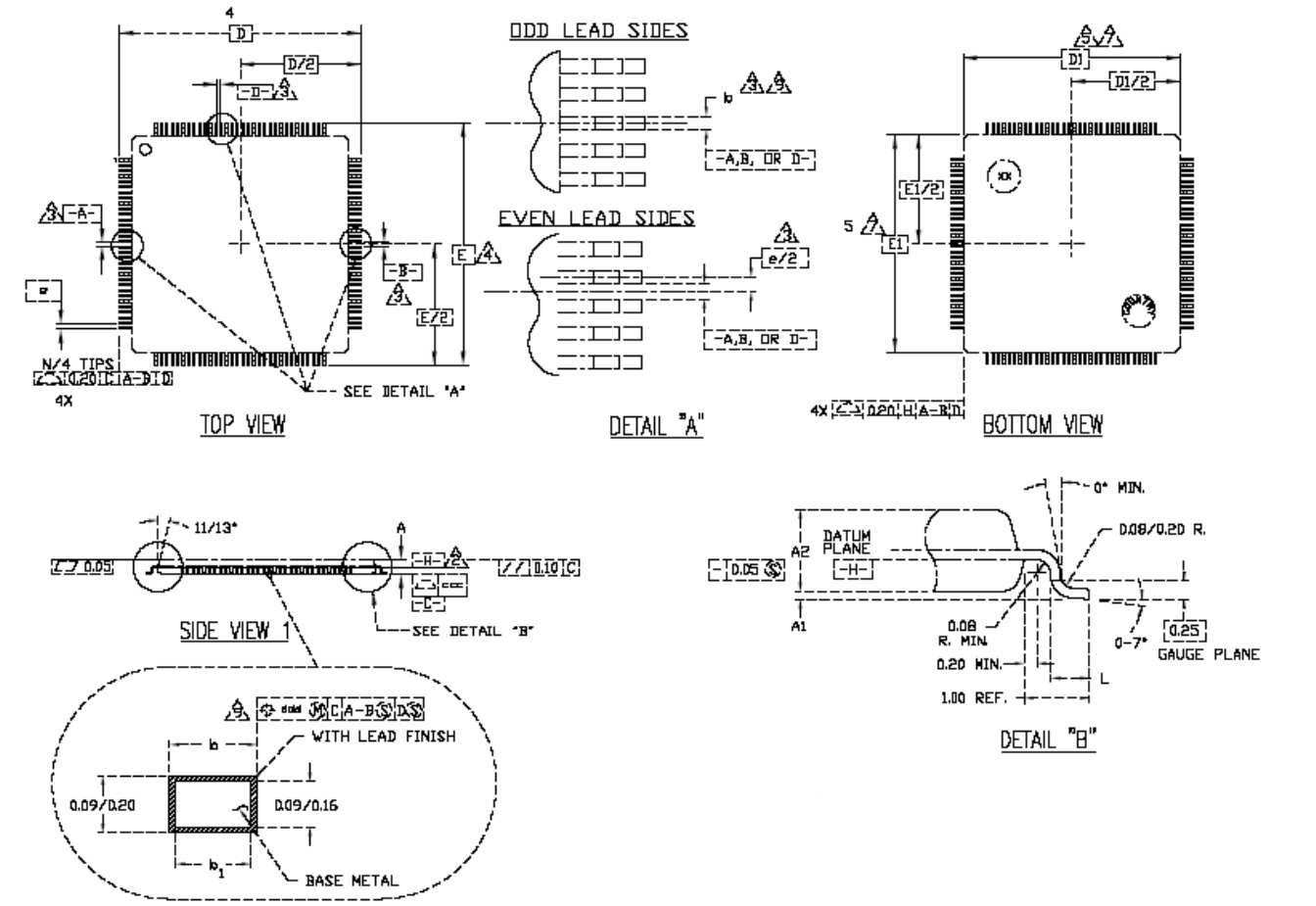

Downloaded from Arrow.com.

Package Information (Continued)

NOTES:

1. ALL DIMENSIONING AND TOLERANCING CONFORM TO ANSI Y14.5-1982.
2. DATUM PLANE [-H-] LOCATED AT MOLD PARTING LINE AND COINCIDENT WITH LEAD, WHERE LEAD EXITS PLASTIC BODY AT BOTTOM OF PARTING LINE.
3. DATUMS [A-B] AND [-D-] TO BE DETERMINED AT CENTERLINE BETWEEN LEADS WHERE LEADS EXIT PLASTIC BODY AT DATUM PLANE [-H-] .
4. TO BE DETERMINED AT SEATING PLANE [-C-] .
5. DIMENSIONS D1 AND E1 DO NOT INCLUDE MOLD PROTRUSION. ALLOWABLE MOLD PROTRUSION IS 0.254 MM ON D1 AND E1 DIMENSIONS.
6. "N" IS THE TOTAL NUMBER OF TERMINALS.
7. THESE DIMENSIONS TO BE DETERMINED AT DATUM PLANE [-H-] .
8. THE TOP OF PACKAGE IS SMALLER THAN THE BOTTOM OF PACKAGE BY 0.15 MILLIMETERS.
9. DIMENSION b DOES NOT INCLUDE DAMBAR PROTRUSION. ALLOWABLE DAMBAR PROTRUSION SHALL BE 0.08mm TOTAL IN EXCESS OF THE b DIMENSION AT MAXIMUM MATERIAL CONDITION. DAMBAR CANNOT BE LOCATED ON THE LOWER RADIUS OR THE FOOT.
10. CONTROLLING DIMENSION: MILLIMETER.
11. MAXIMUM ALLOWABLE DIE THICKNESS TO BE ASSEMBLED IN THIS PACKAGE FAMILY IS 0.38 MILLIMETERS.
12. THIS OUTLINE CONFORMS TO JEDEC PUBLICATION 95 REGISTRATION MS-026, VARIATIONS BCB, BCC, BCD & BCE.
13. A1 IS DEFINED AS THE DISTANCE FROM THE SEATING PLANE TO THE LOWEST POINT OF THE PACKAGE BODY.

N	JEDEC VARIATION ALL DIMENSIONS IN MILLIMETERS			
	64			NOTE
	MIN.	NOM.	MAX.	
A	---	---	1.60	
A_1	0.05	---	0.15	13
A_2	1.35	1.40	1.45	
D	12.00 BSC.			4
D_1	10.00 BSC.			7,8
E	12.00 BSC.			4
E_1	10.00 BSC.			7,8
L	0.45	0.60	0.75	
e	0.50 BSC.			
b	0.17	0.22	0.27	9
b1	0.17	0.20	0.23	
ccc	---	---	0.08	
aaa	---	---	0.08	

Figure 32. 64-Pin LQFP Package

MICREL, INC. 2180 FORTUNE DRIVE SAN JOSE, CA 95131 USA
TEL +1 (408) 944-0800 FAX +1 (408) 474-1000 WEB http://www.micrel.com

Micrel makes no representations or warranties with respect to the accuracy or completeness of the information furnished in this data sheet. This information is not intended as a warranty and Micrel does not assume responsibility for its use. Micrel reserves the right to change circuitry, specifications and descriptions at any time without notice. No license, whether express, implied, arising by estoppel or otherwise, to any intellectual property rights is granted by this document. Except as provided in Micrel's terms and conditions of sale for such products, Micrel assumes no liability whatsoever, and Micrel disclaims any express or implied warranty relating to the sale and/or use of Micrel products including liability or warranties relating to fitness for a particular purpose, merchantability, or infringement of any patent, copyright or other intellectual property right

Micrel Products are not designed or authorized for use as components in life support appliances, devices or systems where malfunction of a product can reasonably be expected to result in personal injury. Life support devices or systems are devices or systems that (a) are intended for surgical implant into the body or (b) support or sustain life, and whose failure to perform can be reasonably expected to result in a significant injury to the user. A Purchaser's use or sale of Micrel Products for use in life support appliances, devices or systems is a Purchaser's own risk and Purchaser agrees to fully indemnify Micrel for any damages resulting from such use or sale.

© 2011 Micrel, Incorporated.

Downloaded from Arrow.com.