REVISIONS				
SYM	DESCRIPTION	REVISED BY	DATE	APPR

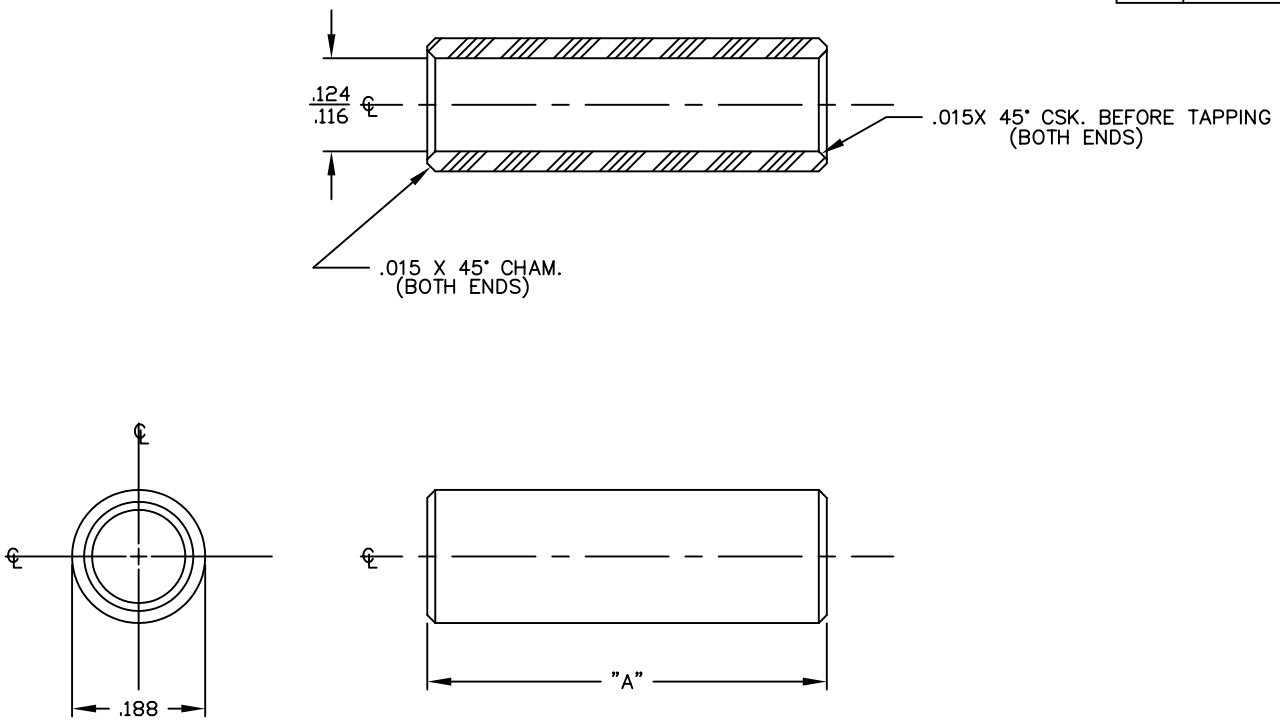

SPACERS	
PART NO.	DIM "A"
9015	.125
9016	.187
9017	.250
9018	.312
9019	.375
9020	.437
9021	.500
9022	.562
9023	.625
9024	.687
9025	.750
9026	.812
9027	.875
9028	.937
9029	1.000

MATERIAL BRASS 360 1/2 HARD

FINISH NICKEL

DIMENSIONAL TOLERANCES
UNLESS OTHERWISE SPECIFIED

.XX	.XXX	.XXXX
– – –	– – –	– – –
FRACTIONS	ANGLES	SCALE
– – –	– – –	NONE

HEAT TREAT – – –

PLOT SCALE: 1=1

TITLE
BRASS ROUND 3/16"
SPACERS
#4 CLEARANCE

DRAWN: T. LORD DATE 02/10/03
CHECKED: T. LORD DATE 02/10/03
APPROVED: T. LORD DATE 02/10/03

ABBATRON
Electronic Connectors and Hardware
632 Arch Street, Meadville, Pa. 16335

SIZE	DRAWING NUMBER	ISSUE
B	SD: SMP-00414	A

Downloaded from Arrow.com.