NOTES:
1. MATERIALS AND FINISHES:
   BODY - BRASS, GOLD PLATING, .000030 INCH [0.0008 MM] THICK OVER COPPER
   CONTACT - BERYLLIUM COPPER, GOLD PLATING, .000030 INCH [0.0008 MM] THICK OVER COPPER
   INSULATOR - PEEK OR LCP, NATURAL
2. ELECTRICAL:
   A. IMPEDANCE: 50 OHM
   B. FREQUENCY RANGE: DC - 12 GHz
   C. VSWR(RETURN LOSS): 1.10 (26 dB), MAX. DC-6GHz
      1.20 (21 dB), MAX. 6-12GHz
   D. DIELECTRIC WITHSTANDING VOLTAGE: 500 VRMS, MIN.
3. PHYSICAL:
   A. DURABILTIY: 1000 CYCLES MIN.
   B. ENGAGEMENT FORCE: 2 LB [9 N] MAX
   C. DISENGAGEMENT FORCE: 0.5 LB [2 N] MIN
   D. INNER CONTACT RETENTION FORCE: 1.5 LB [7 N] MIN
   E. TEMERATURE RANGE: -65° C TO 165° C
   F. INSULATOR MATERIAL RATED TO UL94 V-0
4. PACKAGING:
   A. TRAY PACK
   B. MARKING: AMPHENOL, SMP-MSSB-PCR, DATE CODE

THIRD ANGLE PROJ.

REVISIONS

REV	DESCRIPTION	DATE	ECO	APPR
A	RELEASE TO MFG	9/12/05	45722	MY
C	ADDED UL RATING FOR INSULATOR MATERIAL	28-Jul-11	48667	SH
D	OPTIMIZED INSULATOR RETENTION, TRAY PACK WAS SINGLE PACK/RD-DMI7051701K2	22-May-17	03722	SS

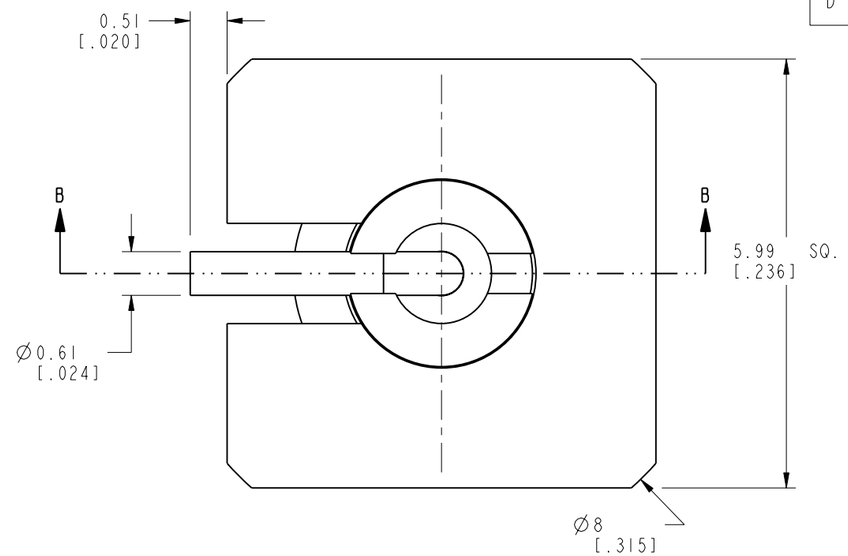

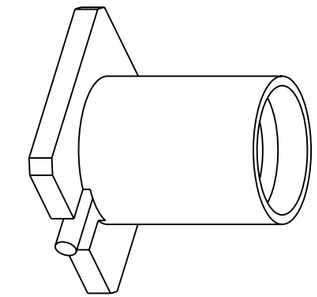

SCALE 6.000

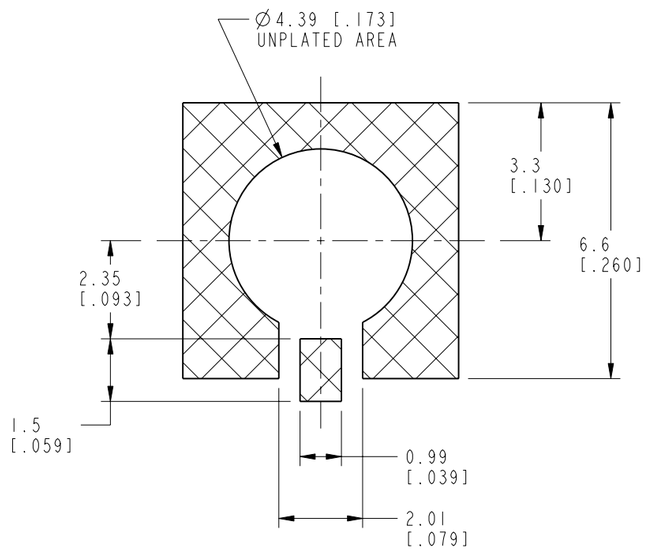

RECOMMENDED PCB PAD LAYOUT
SCALE 7.000

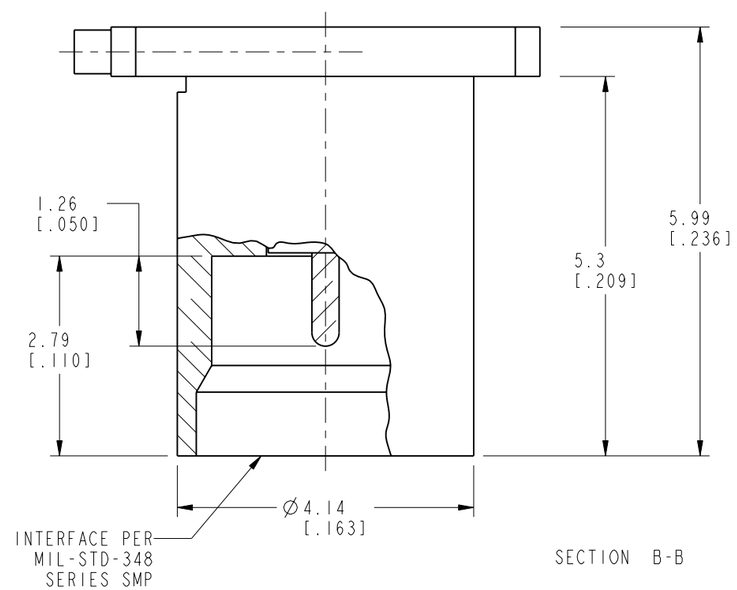

SECTION B-B

CUSTOMER OUTLINE DRAWING
ALL OTHER SHEETS ARE FOR INTERNAL USE ONLY

UNLESS OTHERWISE SPECIFIED, DIMENSIONS ARE IN METRIC AND TOLERANCES ARE:

<0.5mm	0.5 - 6mm	6 - 30mm	30 - 120mm	ANGLES
± 0.05mm	±0.1mm	±0.2mm	± 0.3mm	±1°

NOTICE - These drawings, specifications, or other data (1) are, and remain the property of Amphenol corp. (2) must be returned upon request; and (3) are confidential and not to be disclosed to any person other than those to whom they are given by Amphenol Corp. the furnishing of these drawings, specifications, or other data by Amphenol Corp., or to any other person to anyone for any purpose is not to be regarded by implication or otherwise in any manner licensing, granting rights to permitting such holder or any other person to manufacture, use or sell any product, process or design, patented or otherwise, that may in any way be related to or disclosed by said drawings, specifications, or other data.

MATERIAL

REFERENCE
GEN# ASSYM2_SMP
EAR# 283
615X-1690-100
CONFIGURATION LEVEL:

FINISH

DRAWN K.SONG	DATE 22-May-17	
ENGINEER OWEN BARTHELMES	DATE 25-Apr-01	
APPROVED S.HSIEH	DATE 22-May-17	
CAD FILE		

TITLE
ASSEMBLY,
PC BOARD, REAR MOUNT
SMOOTH BORE

SCALE: 12.0:1.0 | SHEET 2 OF 2

DWG SIZE B | REV D

Amphenol RF
www.amphenolrf.com

DRAWING NO. SMP-MSSB-PCR
ITEM NO. SMP-MSSB-PCR
PART NO. SMP-MSSB-PCR

Downloaded from Arrow.com.