Table of Contents

Features 1

Packages 1

1. Package Types (not to scale) 4

2. Pin Descriptions 5

3. Description 6
   - 3.1. Block Diagram 6

4. Electrical Characteristics 7
   - 4.1. Absolute Maximum Ratings 7
   - 4.2. DC and AC Operating Range 7
   - 4.3. DC Characteristics 7
   - 4.4. Pin Capacitance 8

5. Normalized I_{CC} Graphics 9

6. Device Operation 10
   - 6.1. Operating Modes 11
   - 6.2. AC Read Characteristics 11
   - 6.3. AC Read Waveforms(1,2,3,4) 12
   - 6.4. Input Test Waveforms and Measurement Level 12
   - 6.5. Output Test Load 12
   - 6.6. AC Write Characteristics 13
   - 6.7. AC Write Waveforms 13
   - 6.8. Page Mode Characteristics 14
   - 6.9. Page Mode Write Waveforms(1,2) 15
   - 6.10. Chip Erase Waveforms 15
   - 6.11. Software Data Protection Enable Algorithm(1) 16
   - 6.12. Software Data Protection Disable Algorithm(1) 17
   - 6.13. Software Protected Program Cycle Waveform(1,2) 18
   - 6.14. $\overline{\text{Data}}$ Polling Characteristics(1) 18
   - 6.15. $\overline{\text{Data}}$ Polling Waveforms 19
   - 6.16. Toggle Bit Characteristics(1) 19
   - 6.17. Toggle Bit Waveforms 20

7. Packaging Information 21
   - 7.1. Package Marking Information 21

8. Revision History 28

The Microchip Website 29

Product Change Notification Service 29

Customer Support 29

Product Identification System 30

Downloaded from Arrow.com.

Microchip Devices Code Protection Feature.....31

Legal Notice.....32

Trademarks.....32

Quality Management System.....33

Worldwide Sales and Service.....34

Downloaded from Arrow.com.

1. Package Types (not to scale)

32-Lead PLCC
Top View

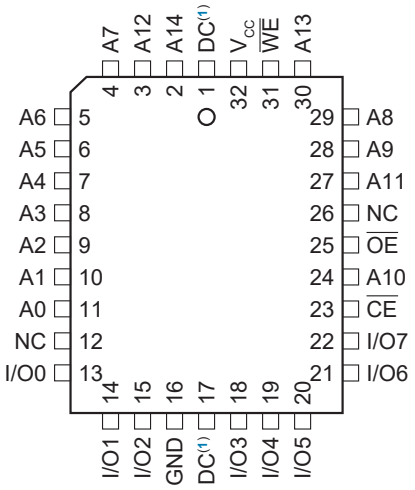

28-Lead SOIC
Top View

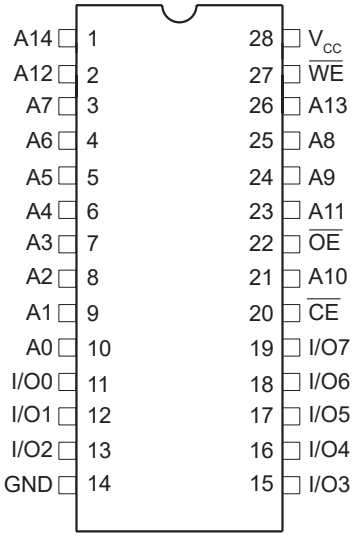

28-Lead TSOP
Top View

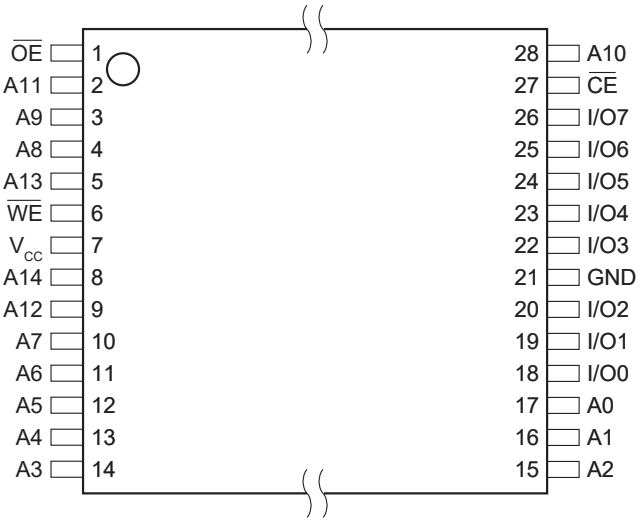

Note 1: PLCC package pins 1 and 17 are “Don’t Connect”.

Downloaded from Arrow.com.

2. Pin Descriptions

The descriptions of the pins are listed in Table 2-1.

Table 2-1. Pin Function Table

Name	32-Lead PLCC	28-Lead SOIC	28-Lead TSOP	Function
DC	1	—	—	Don't Connect
A14	2	1	8	Address
A12	3	2	9	Address
A7	4	3	10	Address
A6	5	4	11	Address
A5	6	5	12	Address
A4	7	6	13	Address
A3	8	7	14	Address
A2	9	8	15	Address
A1	10	9	16	Address
A0	11	10	17	Address
NC	12	—	—	No Connect
I/O0	13	11	18	Data Input/Output
I/O1	14	12	19	Data Input/Output
I/O2	15	13	20	Data Input/Output
GND	16	14	21	Ground
DC	17	—	—	Don't Connect
I/O3	18	15	22	Data Input/Output
I/O4	19	16	23	Data Input/Output
I/O5	20	17	24	Data Input/Output
I/O6	21	18	25	Data Input/Output
I/O7	22	19	26	Data Input/Output
$\overline{CE}$	23	20	27	Chip Enable
A10	24	21	28	Address
$\overline{OE}$	25	22	1	Output Enable
NC	26	—	—	No Connect
A11	27	23	2	Address
A9	28	24	3	Address
A8	29	25	4	Address
A13	30	26	5	Address
$\overline{WE}$	31	27	6	Write Enable
V_{CC}	32	28	7	Device Power Supply

Downloaded from Arrow.com.

3. Description

The AT28HC256 is a high-performance Electrically Erasable and Programmable Read-Only Memory (EEPROM). Its 256-Kb memory is organized as 32,768 words by 8 bits. Manufactured with Microchip's advanced nonvolatile CMOS technology, the device offers access times to 70 ns with power dissipation of just 440 mW. When the device is deselected, the standby current is less than 3 mA.

The AT28HC256 is accessed like a Static RAM for the read or write cycle without the need for external components. The device contains a 64-byte page register to allow writing of up to 64 bytes simultaneously. During a write cycle, the address and 1 to 64 bytes of data are internally latched, freeing the address and data bus for other operations. Following the initiation of a write cycle, the device will automatically write the latched data using an internal control timer. The end of a write cycle can be detected by $\overline{DATA}$ Polling of I/O7. Once the end of a write cycle has been detected, a new access for a read or write can begin.

The AT28HC256 has additional features to ensure high quality and manufacturability. The device utilizes internal error correction for extended endurance and improved data retention characteristics. An optional software data protection mechanism is available to guard against inadvertent writes. The device also includes an extra 64 bytes of EEPROM for device identification or tracking.

3.1 Block Diagram

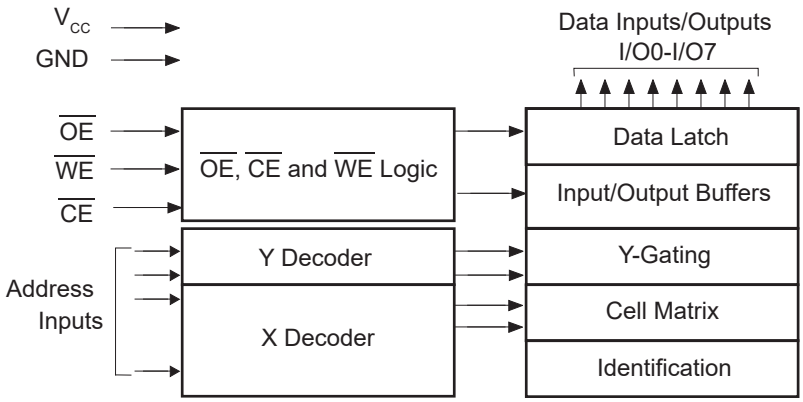

Downloaded from Arrow.com.

4. Electrical Characteristics

4.1 Absolute Maximum Ratings

Temperature under bias	-55°C to +125°C
Storage temperature	-65°C to +150°C
All input voltages (including NC pins) with respect to ground	-0.6V to +6.25V
All output voltages with respect to ground	-0.6V to V_{CC} + 0.6V
Voltage on $\overline{OE}$ and A9 with respect to ground	-0.6V to +13.5V

Note: Stresses above those listed under “Absolute Maximum Ratings” may cause permanent damage to the device. This is a stress rating only and functional operation of the device at these or any other conditions above those indicated in the operation listings of this specification is not implied. Exposure to absolute maximum rating conditions for extended periods may affect device reliability.

4.2 DC and AC Operating Range

Table 4-1. DC and AC Operating Range

		AT28HC256-70	AT28HC256-90	AT28HC256-12
Operating Temperature (Case)	Industrial	-40°C to +85°C	-40°C to +85°C	-40°C to +85°C
V_{CC} Power Supply		5V ± 10%	5V ± 10%	5V ± 10%

4.3 DC Characteristics

Table 4-2. DC Characteristics

Parameter	Symbol	Minimum	Maximum	Units	Test Conditions
Input Load Current	I_{LI}	—	10	µA	V_{IN} = 0V to V_{CC} + 1V
Output Leakage Current	I_{LO}	—	10	µA	$V_{I/O}$ = 0V to V_{CC}
V_{CC} Standby Current TTL	I_{SB1}	—	3	mA	$\overline{CE}$ = 2.0V to V_{CC} for AT28HC256-90, -12
		—	60	mA	$\overline{CE}$ = 2.0V to V_{CC} for AT28HC256-70
V_{CC} Standby Current CMOS	I_{SB2}	—	300	µA	$\overline{CE}$ = V_{CC} - 0.3V to V_{CC} for AT28HC256-90, -12
V_{CC} Active Current	I_{CC}	—	80	mA	f = 5 MHz; I_{OUT} = 0 mA
Input Low Voltage	V_{IL}	—	0.8	V	
Input High Voltage	V_{IH}	2.0	—	V	
Output Low Voltage	V_{OL}	—	0.45	V	I_{OL} = 6.0 mA
Output High Voltage	V_{OH}	2.4	—	V	I_{OH} = -4 mA

Downloaded from Arrow.com.

4.4 Pin Capacitance

Table 4-3. Pin Capacitance[1,2]

Symbol	Typical	Maximum	Units	Conditions
C_{IN}	4	6	pF	V_{IN} = 0V
C_{OUT}	8	12	pF	V_{OUT} = 0V

Notes:

1. This parameter is characterized but is not 100% tested in production.
2. f = 1 MHz, T_A = 25°C

Downloaded from Arrow.com.

5. Normalized I_{CC} Graphics

Figure 5-1. Normalized Supply Current vs. Temperature

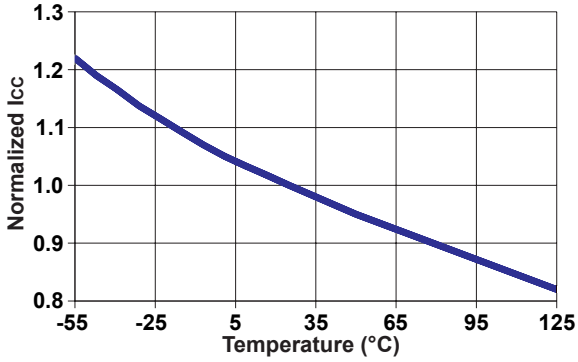

Figure 5-2. Normalized Supply Current vs. Address Frequency

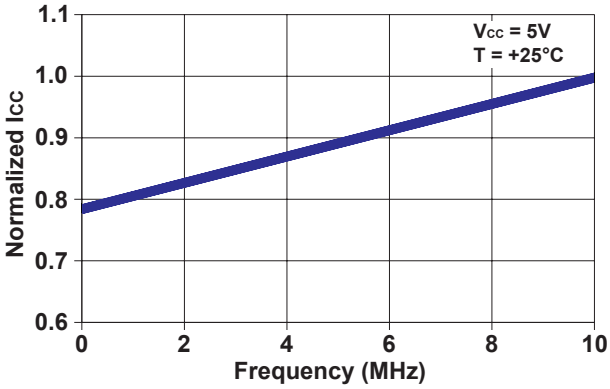

Figure 5-3. Normalized Supply Current vs. Supply Voltage

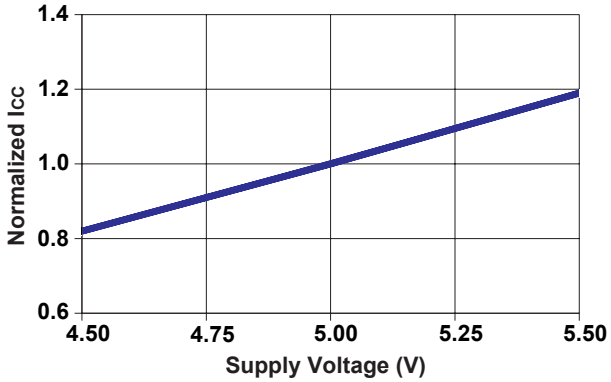

Downloaded from Arrow.com.

6. Device Operation

READ: The AT28HC256 is accessed like a Static RAM. When $\overline{CE}$ and $\overline{OE}$ are low and $\overline{WE}$ is high, the data stored at the memory location determined by the address pins is asserted on the outputs. The outputs are put in the high-impedance state when either $\overline{CE}$ or $\overline{OE}$ is high. This dual-line control gives designers flexibility in preventing bus contention in their system.

BYTE WRITE: A low pulse on the $\overline{WE}$ or $\overline{CE}$ input with $\overline{CE}$ or $\overline{WE}$ low (respectively) and $\overline{OE}$ high initiates a write cycle. The address is latched on the falling edge of $\overline{CE}$ or $\overline{WE}$, whichever occurs last. The data is latched by the first rising edge of $\overline{CE}$ or $\overline{WE}$. Once a byte write is started, it will automatically time itself to completion. Once a programming operation is initiated and for the duration of t_{WC}, a read operation will effectively be a polling operation.

PAGE WRITE: The page write operation of the AT28HC256 allows 1 to 64 bytes of data to be written into the device during a single internal programming period. A page write operation is initiated in the same manner as a byte write; the first byte written can then be followed by 1 to 63 additional bytes. Each successive byte must be written within 150 µs (t_{BLC}) of the previous byte. If the t_{BLC} limit is exceeded, the AT28HC256 will cease accepting data and commence the internal programming operation. All bytes during a page write operation must reside on the same page as defined by the state of the A6-A14 inputs. For each $\overline{WE}$ high-to-low transition during the page write operation, A6-A14 must be the same. The A0 to A5 inputs are used to specify which bytes within the page are to be written. The bytes may be loaded in any order and may be altered within the same load period. Only bytes which are specified for writing will be written; unnecessary cycling of other bytes within the page does not occur.

DATA POLLING: The AT28HC256 features $\overline{DATA}$ Polling to indicate the end of a write cycle. During a byte or page write cycle, an attempted read of the last byte written will result in the complement of the written data to be presented on I/O7. Once the write cycle has been completed, true data is valid on all outputs and the next write cycle may begin. $\overline{DATA}$ Polling may begin at any time during the write cycle.

TOGGLE BIT: In addition to $\overline{DATA}$ Polling, the AT28HC256 provides another method for determining the end of a write cycle. During the write operation, successive attempts to read data from the device will result in I/O6 toggling between one and zero. Once the write is completed, I/O6 will stop toggling and valid data will be read. Testing the toggle bit may begin at any time during the write cycle.

DATA PROTECTION: If precautions are not taken, inadvertent writes to any 5-volt-only nonvolatile memory may occur during transitions of the host system power supply. Microchip incorporated both hardware and software features that will protect the memory against inadvertent writes.

HARDWARE PROTECTION: Hardware features protect against inadvertent writes to the AT28HC256 in the following ways:

- V_{CC} sense – if V_{CC} is below 3.8V (typical), the write function is inhibited
- V_{CC} power-on delay – once V_{CC} reached 3.8V, the device will automatically time out 5 ms (typical) before allowing a write
- Write inhibit – holding any one of $\overline{OE}$ low, $\overline{CE}$ high or $\overline{WE}$ high inhibits write cycles
- Noise filter – pulses of less than 15 ns (typical) on the $\overline{WE}$ or $\overline{CE}$ inputs will not initiate a write cycle

SOFTWARE DATA PROTECTION: A software-controlled data protection feature was implemented on the AT28HC256. When enabled, the software data protection (SDP) will prevent inadvertent writes. The SDP feature may be enabled or disabled by the user; the AT28HC256 is shipped with SDP disabled.

SDP is enabled by the host system issuing a series of three write commands; three specific bytes of data are written to three specific addresses (refer to Software Data Protection Algorithm). After writing the 3-byte command sequence and after t_{WC}, the entire AT28HC256 will be protected against inadvertent write operations. It should be noted that, once protected, the host may still perform a byte or page write to the AT28HC256. This is done by preceding the data to be written by the same 3-byte command sequence used to enable SDP.

Once set, SDP will remain active unless the disable command sequence is issued. Power transitions do not disable SDP and SDP will protect the AT28HC256 during power-up and power-down conditions. All command sequences must conform to the page write timing specifications. The data in the enable and disable command sequences is not written to the device and the memory addresses used in the sequence may be written with data in either a byte or page write operation.

Downloaded from Arrow.com.

After setting SDP, any attempt to write to the device without the 3-byte command sequence will start the internal write timers. No data will be written to the device. However, for the duration of t_{WC}, read operations will effectively be polling operations.

DEVICE IDENTIFICATION: An extra 64 bytes of EEPROM memory are available to the user for device identification. By raising A9 to 12V ± 0.5V and using address locations 7FC0H to 7FFFH, the bytes may be written to or read from in the same manner as the regular memory array.

OPTIONAL CHIP ERASE MODE: The entire device can be erased using a 6-byte software code. See Software Chip Erase application note for details.

6.1 Operating Modes

Table 6-1. Operating Modes

Mode	$\overline{CE}$	$\overline{OE}$	$\overline{WE}$	I/O
Read	V_{IL}	V_{IL}	V_{IH}	D_{OUT}
Write(1)	V_{IL}	V_{IH}	V_{IL}	D_{IN}
Standby/Write Inhibit	V_{IH}	X(2)	X	High-Z
Write Inhibit	X	X	V_{IH}	
Write Inhibit	X	V_{IL}	X	
Output Disable	X	V_{IH}	X	High-Z
Chip Erase	V_{IL}	V_H(3)	V_{IL}	High-Z

Notes:

1. Refer to AC Programming Waveforms.
2. X can be V_{IL} or V_H.
3. V_H = 12.0 V ± 0.5V

6.2 AC Read Characteristics

Table 6-2. AC Read Characteristics

Parameter	Symbol	AT28HC256-70		AT28HC256-90		AT28HC256-12		Units
		Min.	Max.	Min.	Max.	Min.	Max.	
Address to Output Delay	t_{ACC}	—	70	—	90	—	120	ns
$\overline{CE}$ to Output Delay	t_{CE}(1)	—	70	—	90	—	120	ns
$\overline{OE}$ to Output Delay	t_{OE}(2)	0	35	0	40	0	50	ns
$\overline{CE}$ or $\overline{OE}$ to Output Float	t_{DF}(3,4)	0	35	0	40	0	50	ns
Output Hold from $\overline{OE}$, $\overline{CE}$ or Address, whichever occurred first	t_{OH}	0	—	0	—	0	—	ns

Downloaded from Arrow.com.

6.3 AC Read Waveforms(1,2,3,4)

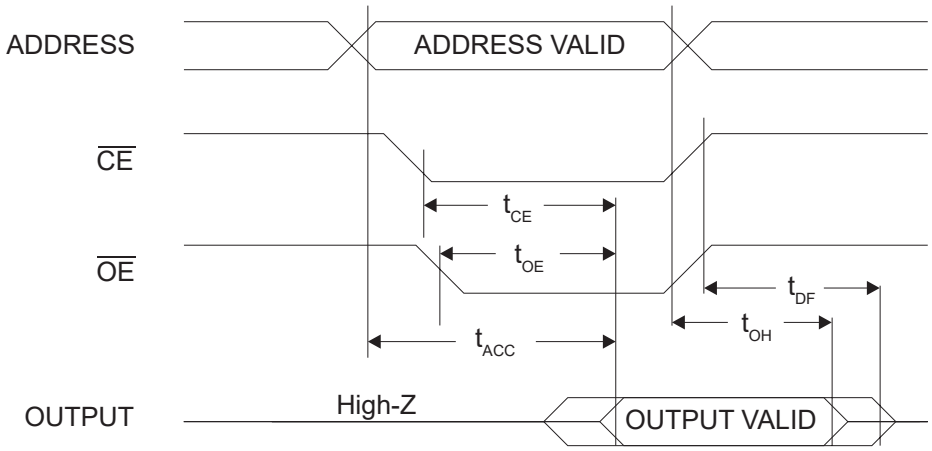

Notes:

1. $\overline{CE}$ may be delayed up to t_{ACC}-t_{CE} after the address transition without impact on t_{ACC}.
2. $\overline{OE}$ may be delayed up to t_{CE}-t_{OE} after the falling edge of $\overline{CE}$ without impact on t_{CE} or by t_{ACC}-t_{OE} after an address change without impact in t_{ACC}.
3. t_{DF} is specified from $\overline{OE}$ or $\overline{CE}$, whichever occurs first (C_L = 5 pF).
4. This parameter is characterized and is not 100% tested.

6.4 Input Test Waveforms and Measurement Level

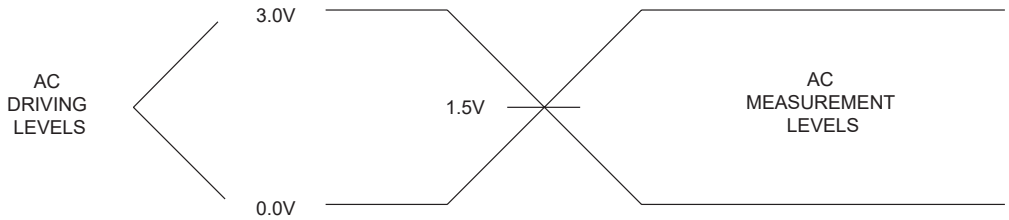

Note: t_R, t_F < 5 ns.

6.5 Output Test Load

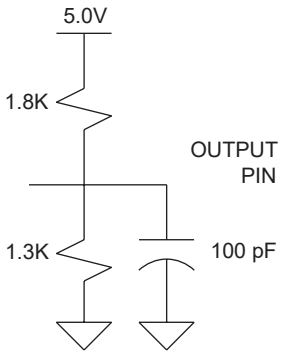

Downloaded from Arrow.com.

6.6 AC Write Characteristics

Table 6-3. AC Write Characteristics

Parameter	Symbol	Minimum	Maximum	Units
Address, $\overline{OE}$ Setup Time	t_{AS}, t_{OES}	0	—	ns
Address Hold Time	t_{AH}	50	—	ns
Chip Select Setup Time	t_{CS}	0	—	ns
Chip Select Hold Time	t_{CH}	0	—	ns
Write Pulse Width ($\overline{WE}$ or $\overline{CE}$)	t_{WP}	100	—	ns
Data Setup Time	t_{DS}	50	—	ns
Data, $\overline{OE}$ Hold Time	t_{DH}, t_{OEH}	0	—	ns
Time to Data Valid	t_{DV}	NR[1]	—	

Note:
1. NR = No Restriction

6.7 AC Write Waveforms

6.7.1 $\overline{WE}$ Controlled

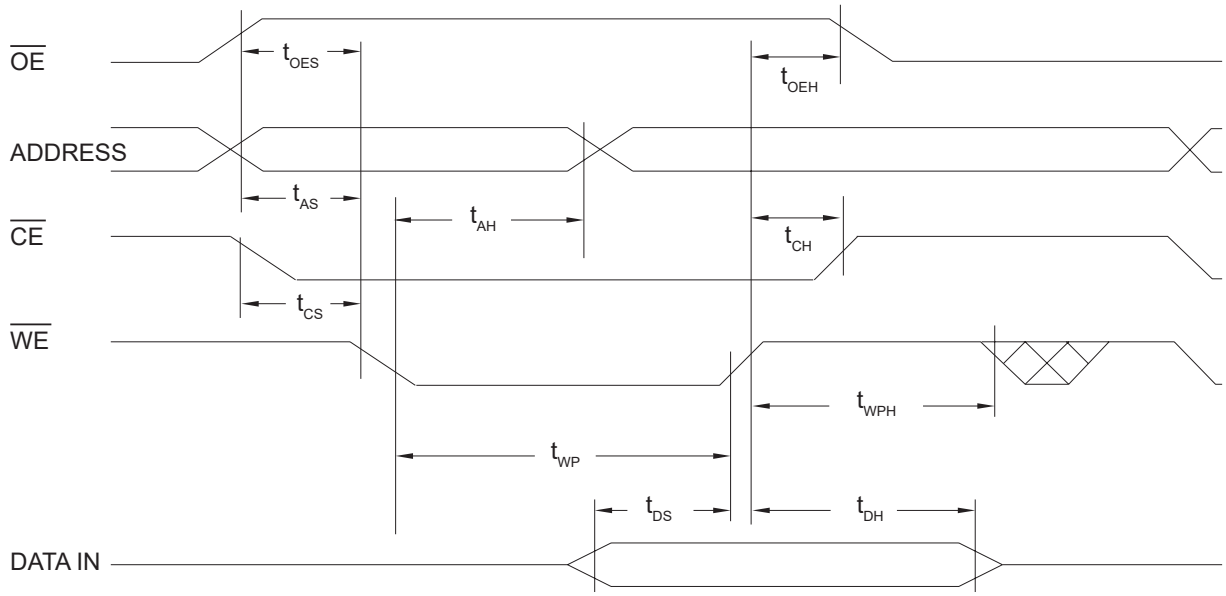

Downloaded from Arrow.com.

6.7.2 $\overline{CE}$ Controlled

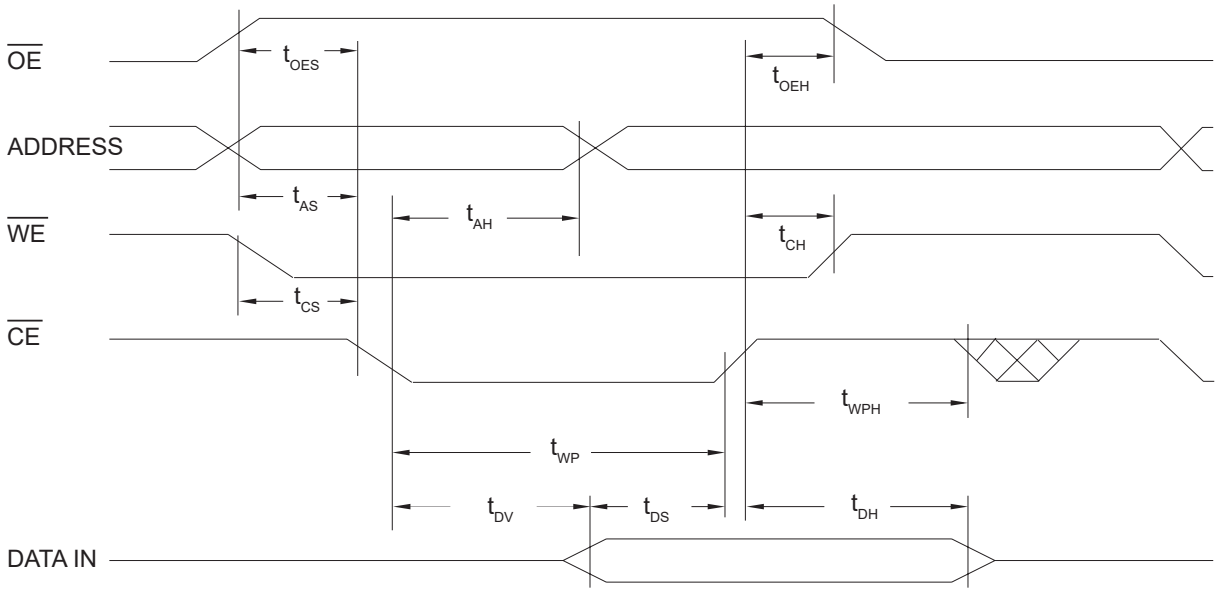

6.8 Page Mode Characteristics

Table 6-4. Page Mode Write Characteristics

Parameter		Symbol	Minimum	Maximum	Units
Write Cycle Time (option available)	AT28HC256	t_{WC}	—	10	ms
	AT28HC256F		—	3	ms
Address Setup Time		t_{AS}	0	—	ns
Address Hold Time		t_{AH}	50	—	ns
Data Setup Time		t_{DS}	50	—	ns
Data Hold Time		t_{DH}	0	—	ns
Write Pulse Width		t_{WP}	100	—	ns
Byte Load Cycle Time		t_{BLC}	—	150	µs
Write Pulse Width High		t_{WPH}	50	—	ns

Downloaded from Arrow.com.

6.9 Page Mode Write Waveforms[1,2]

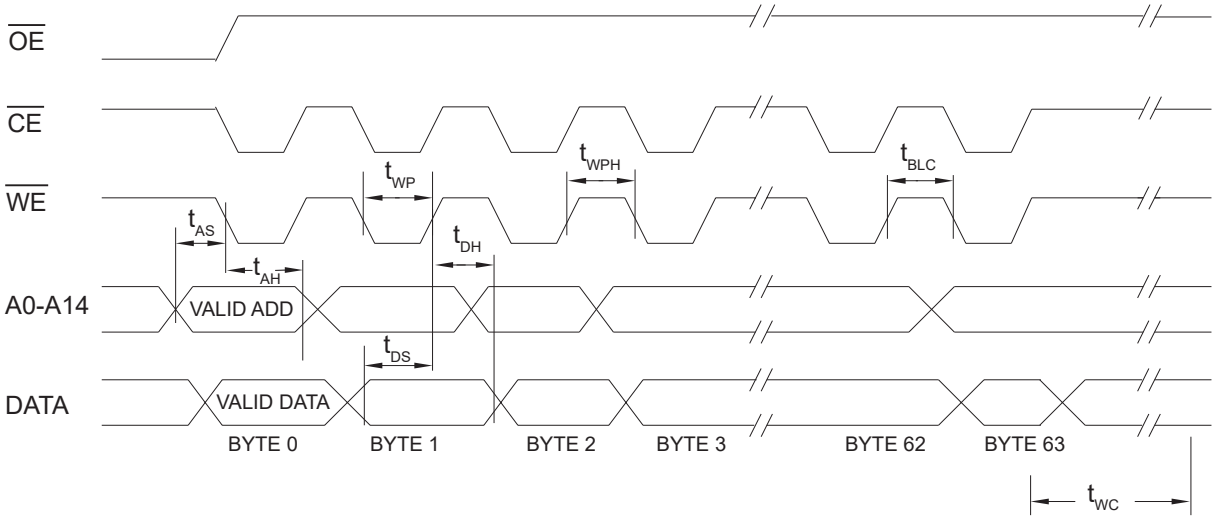

Notes:

1. A6 through A14 must specify the same page address during each high-to-low transition of $\overline{WE}$ (or $\overline{CE}$).
2. $\overline{OE}$ must be high only when $\overline{WE}$ and $\overline{CE}$ are both low.

6.10 Chip Erase Waveforms

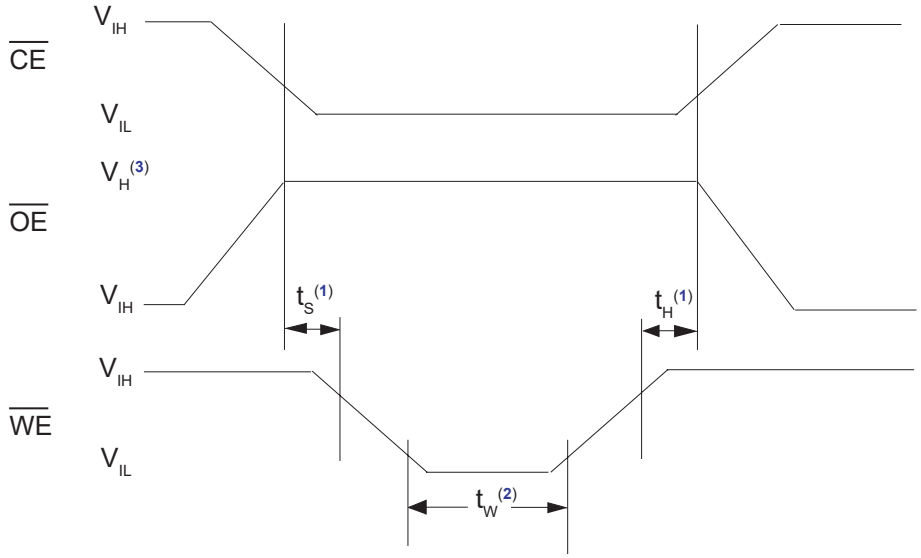

Notes:

1. $t_S = t_H = 5$ µsec (minimum)
2. $t_W = 10$ msec (minimum)
3. $V_H = 12.0V \pm 0.5V$

Downloaded from Arrow.com.

6.11 Software Data Protection Enable Algorithm[1]

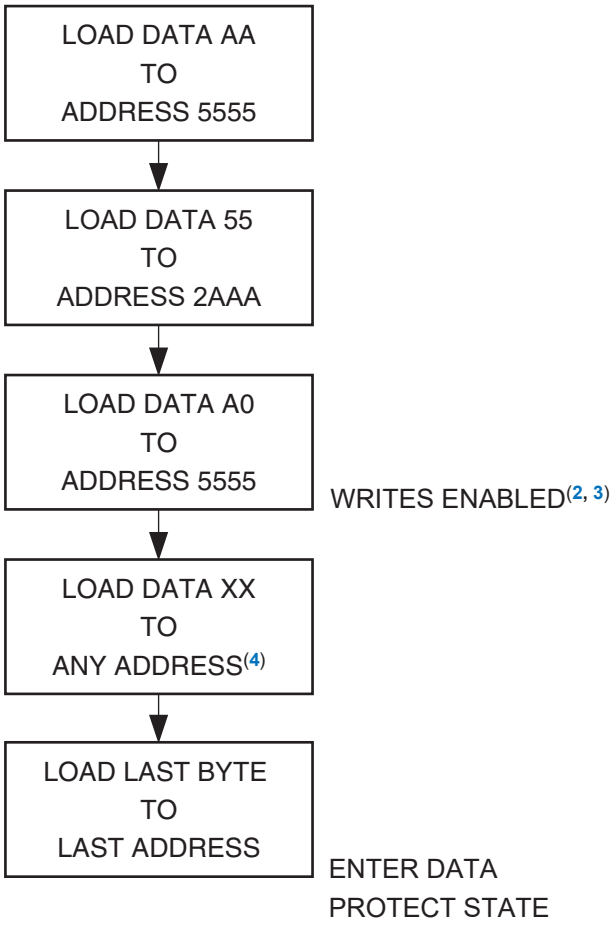

Notes:

1. Data format: I/O7-I/O0 (Hex); Address format: A14-A0 (Hex).
2. Write-Protect state will be activated at end of write even if no other data is loaded.
3. Write-Protect state will be deactivated at end of write period even if no other data is loaded.
4. 1 to 64 bytes of data are loaded.

Downloaded from Arrow.com.

6.12 Software Data Protection Disable Algorithm[1]

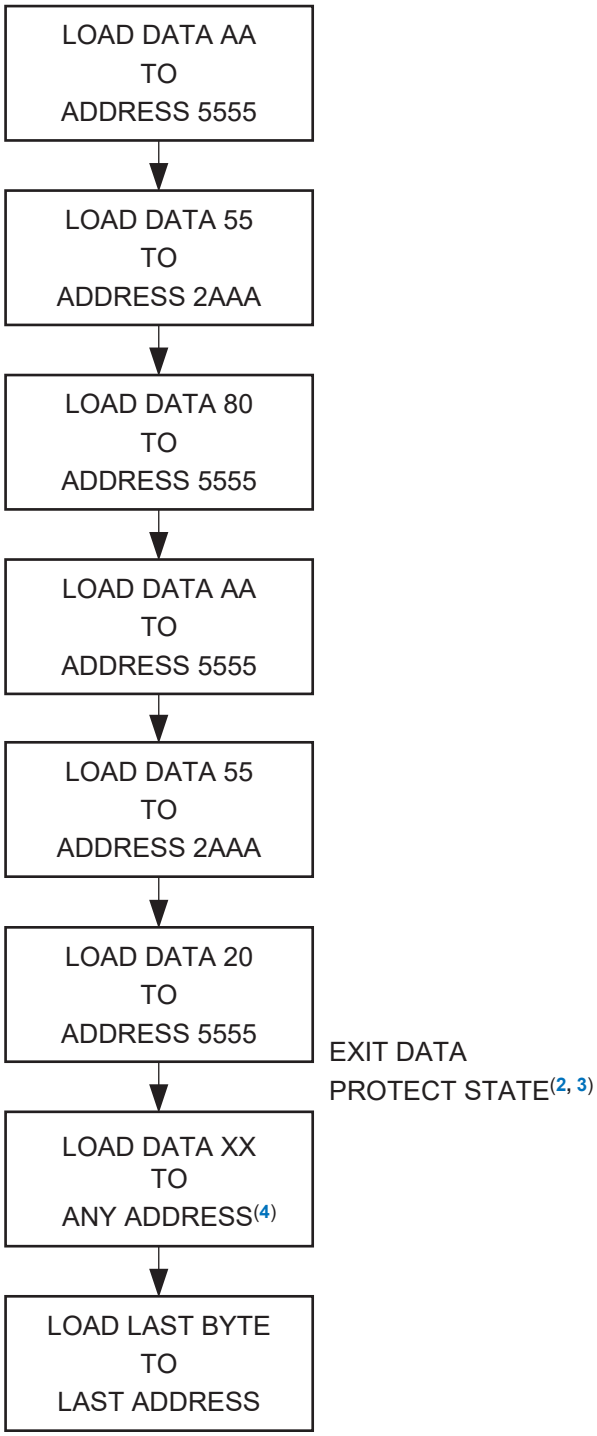

Notes:

1. Data format: I/O7-I/O0 (Hex); Address format: A14-A0 (Hex).
2. Write-Protect state will be deactivated at end of write period even if no other data is loaded.
3. Write-Protect state will be deactivated at end of write period even if no other data is loaded.
4. 1 to 64 bytes of data are loaded.

Downloaded from Arrow.com.

6.13 Software Protected Program Cycle Waveform[1,2]

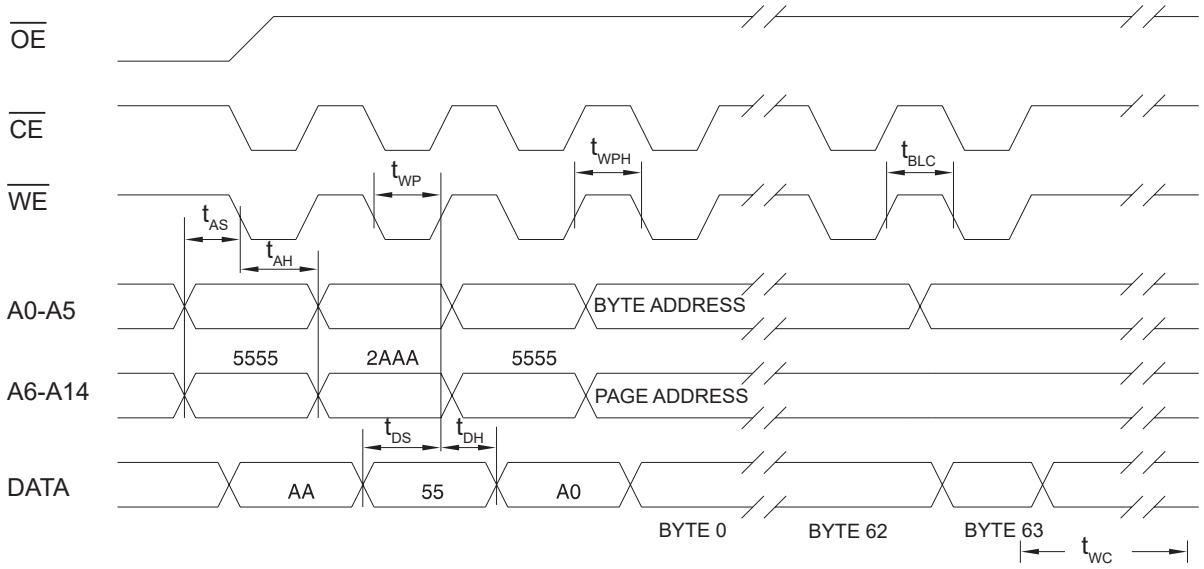

Notes:

1. A6-A14 must specify the same page address during each high-to-low transition of $\overline{WE}$ (or $\overline{CE}$) after the software code has been entered.
2. $\overline{OE}$ must be high only when $\overline{WE}$ and $\overline{CE}$ are both low.

6.14 $\overline{Data}$ Polling Characteristics[1]

Table 6-5. Data Polling Characteristics

Parameter	Symbol	Minimum	Typical	Maximum	Units
Data Hold Time	t_{DH}	0	—	—	ns
$\overline{OE}$ Hold Time	t_{OEH}	0	—	—	ns
$\overline{OE}$ to Output Delay[2]	t_{OE}	—	—	—	ns
Write Recovery Time	t_{WR}	0	—	—	ns

Notes:

1. These parameters are characterized and not 100% tested.
2. See AC Read Characteristics.

Downloaded from Arrow.com.

6.15 $\overline{\text{Data}}$ Polling Waveforms

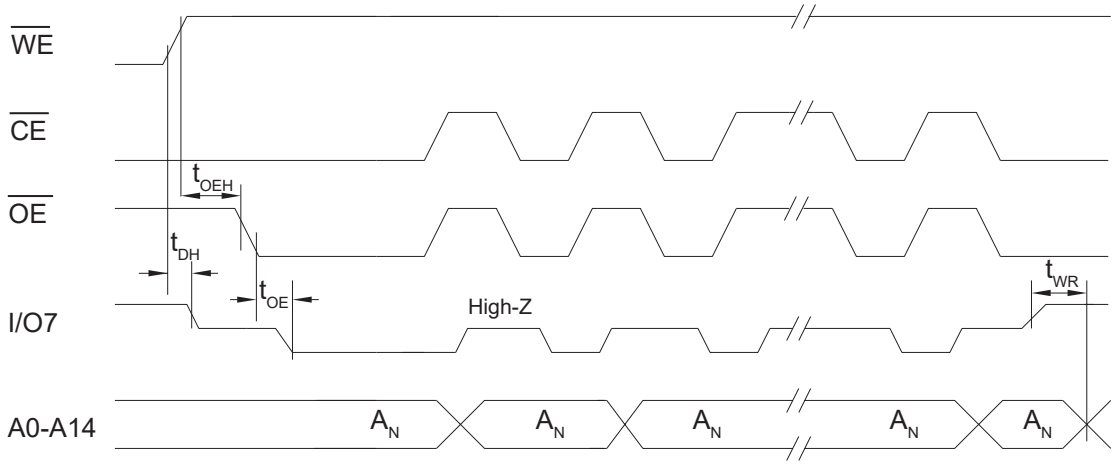

6.16 Toggle Bit Characteristics[1]

Table 6-6. Toggle Bit Characteristics

Parameter	Symbol	Minimum	Typical	Maximum	Units
Data Hold Time	t_{DH}	10	—	—	ns
$\overline{\text{OE}}$ Hold Time	t_{OEH}	10	—	—	ns
$\overline{\text{OE}}$ to Output Delay[2]	t_{OE}	—	—	—	ns
$\overline{\text{OE}}$ High Pulse[2]	t_{OEHP}	150	—	—	ns
Write Recovery Time	t_{WR}	0	—	—	ns

Notes:

1. These parameters are characterized and not 100% tested.
2. See AC Read Characteristics.

Downloaded from Arrow.com.

6.17 Toggle Bit Waveforms

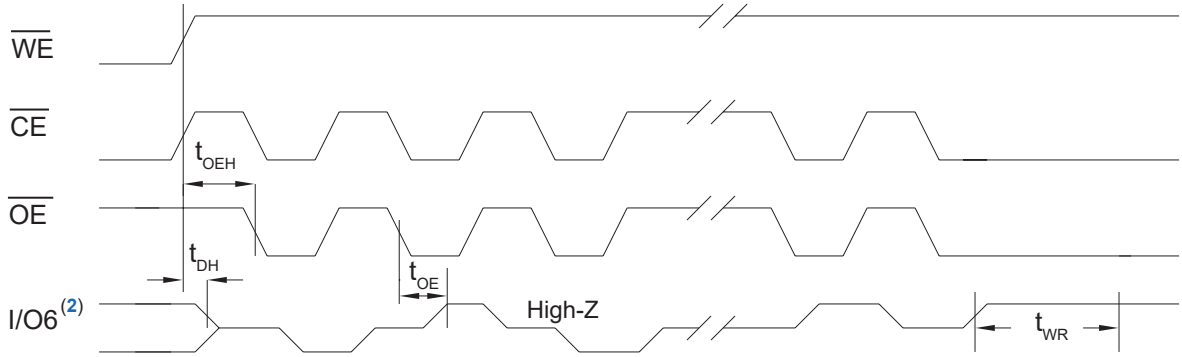

Notes:

1. Toggling either $\overline{OE}$ or $\overline{CE}$ or both $\overline{OE}$ and $\overline{CE}$ will operate toggle bit.
2. Beginning and ending state of I/O6 will vary.
3. Any address location may be used but the address should not vary.

Downloaded from Arrow.com.

7. Packaging Information

7.1 Package Marking Information

AT28HC256: Package Marking Information

28-Lead SOIC		32-Lead PLCC	
Topside	Backside	Topside	Backside
ATMEL 19802C 28HC256#-%%U YYWWNNN		ATMEL AT28HC256# %%U-19802C YYWWNNN	
28-Lead TSOP			
Topside	Backside		
ATMEL AT28HC256# %%U-19802C YYWWNNN			

Note: no backside markings

		%% = Access Time	
		70: 70 ns 90: 90 ns 12: 120 ns	
# Options	**Lot Trace Code**		
Blank = 10k writes, 10ms standard E = 100k writes, Extended endurance F = 3ms Fast write cycle	YYWWNNN: Lot Trace Code YY = Year, WW = Work Week NNN = Assembly Trace Code		

Downloaded from Arrow.com.

32-Lead Plastic Leaded Chip Carrier (L) – Rectangle [PLCC]

Note: For the most current package drawings, please see the Microchip Packaging Specification located at http://www.microchip.com/packaging

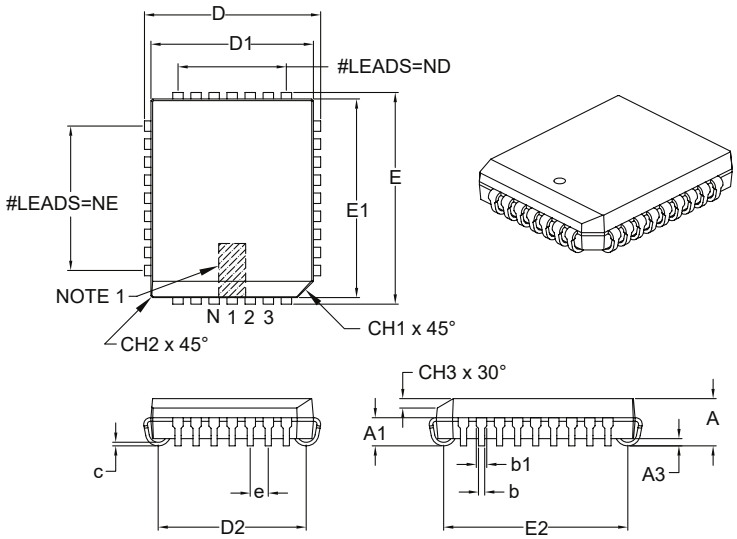

Units		INCHES		
Dimension Limits		MIN	NOM	MAX
Number of Pins	N	32		
Pitch	e	.050		
Pins along Length	ND	7		
Pins along Width	NE	9		
Overall Height	A	.125	–	.140
Contact Height	A1	.060	–	.095
Standoff §	A3	.015	–	–
Corner Chamfer	CH1	.042	–	.048
Chamfers	CH2	–	–	.020
Side Chamfer Height	CH3	.023	–	.029
Overall Length	D	.485	–	.495
Overall Width	E	.585	–	.595
Molded Package Length	D1	.447	–	.453
Molded Package Width	E1	.547	–	.553
Footprint Length	D2	.376	–	.446
Footprint Width	E2	.476	–	.546
Lead Thickness	c	.008	–	.013
Upper Lead Width	b1	.026	–	.032
Lower Lead Width	b	.013	–	.021

Notes:

1. Pin 1 visual index feature may vary, but must be located within the hatched area.
2. § Significant Characteristic.
3. Dimensions D1 and E1 do not include mold flash or protrusions. Mold flash or protrusions shall not exceed .010" per side.
4. Dimensioning and tolerancing per ASME Y14.5M.

Microchip Technology Drawing C04-023B

Downloaded from Arrow.com.

32-Lead Plastic Leaded Chip Carrier (L) - Rectangle [PLCC]

Note: For the most current package drawings, please see the Microchip Packaging Specification located at http://www.microchip.com/packaging

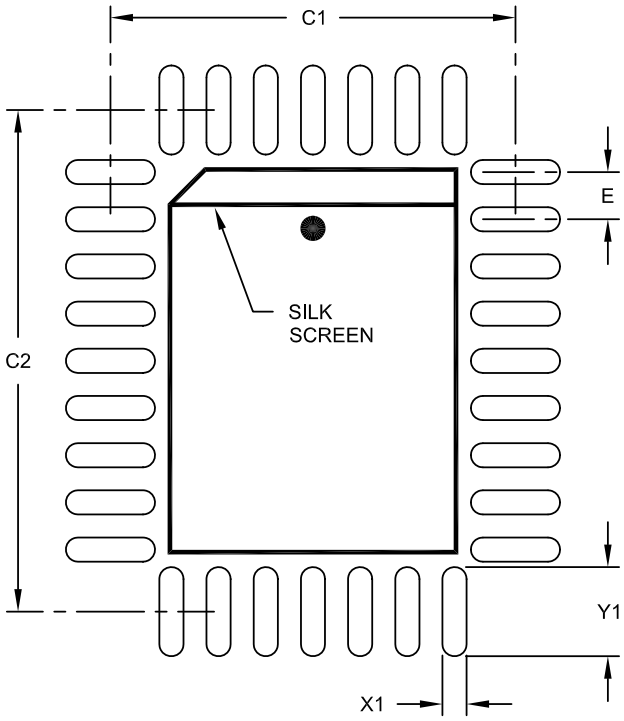

RECOMMENDED LAND PATTERN

Units		INCHES		
Dimension Limits		MIN	NOM	MAX
Contact Pitch	E		.050 BSC	
Contact Pad Spacing	C1		.429	
Contact Pad Spacing	C2		.531	
Contact Pad Width (X32)	X1			,026
Contact Pad Length (X32)	Y1			.094

Notes:

1. Dimensioning and tolerancing per ASME Y14.5M
   BSC: Basic Dimension. Theoretically exact value shown without tolerances.

Microchip Technology Drawing No. C04-2023A

Downloaded from Arrow.com.

28-Lead Plastic Small Outline (SO) - Wide, 7.50 mm Body [SOIC]

Note: For the most current package drawings, please see the Microchip Packaging Specification located at http://www.microchip.com/packaging

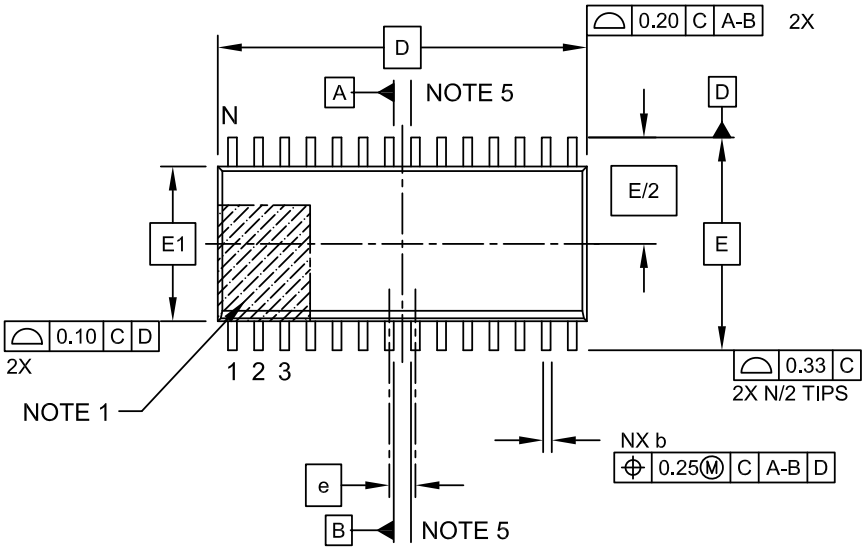

TOP VIEW

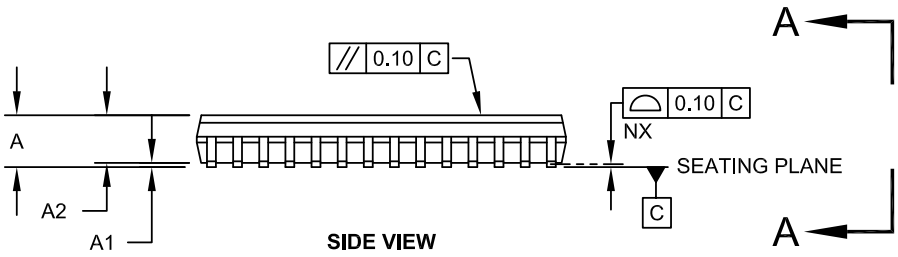

SIDE VIEW

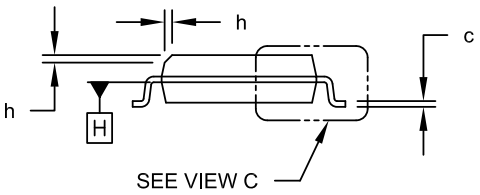

VIEW A-A

Microchip Technology Drawing C04-052C Sheet 1 of 2

Downloaded from Arrow.com.

28-Lead Plastic Small Outline (SO) - Wide, 7.50 mm Body [SOIC]

Note: For the most current package drawings, please see the Microchip Packaging Specification located at http://www.microchip.com/packaging

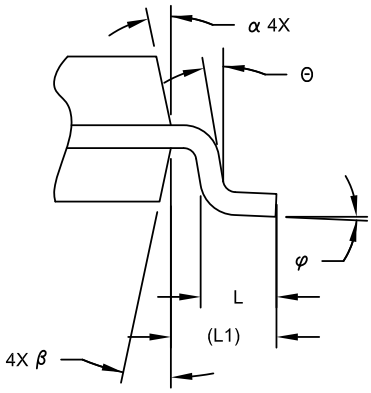

VIEW C

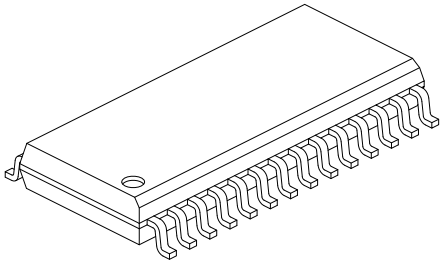

Units		MILLIMETERS		
Dimension Limits		MIN	NOM	MAX
Number of Pins	N	28		
Pitch	e	1.27 BSC		
Overall Height	A	-	-	2.65
Molded Package Thickness	A2	2.05	-	-
Standoff §	A1	0.10	-	0.30
Overall Width	E	10.30 BSC		
Molded Package Width	E1	7.50 BSC		
Overall Length	D	17.90 BSC		
Chamfer (Optional)	h	0.25	-	0.75
Foot Length	L	0.40	-	1.27
Footprint	L1	1.40 REF		
Lead Angle	Θ	0°	-	-
Foot Angle	φ	0°	-	8°
Lead Thickness	c	0.18	-	0.33
Lead Width	b	0.31	-	0.51
Mold Draft Angle Top	α	5°	-	15°
Mold Draft Angle Bottom	β	5°	-	15°

Notes:

1. Pin 1 visual index feature may vary, but must be located within the hatched area.
2. § Significant Characteristic
3. Dimension D does not include mold flash, protrusions or gate burrs, which shall not exceed 0.15 mm per end. Dimension E1 does not include interlead flash or protrusion, which shall not exceed 0.25 mm per side.
4. Dimensioning and tolerancing per ASME Y14.5M
   BSC: Basic Dimension. Theoretically exact value shown without tolerances.
   REF: Reference Dimension, usually without tolerance, for information purposes only.
5. Datums A & B to be determined at Datum H.

Microchip Technology Drawing C04-052C Sheet 2 of 2

Downloaded from Arrow.com.

28-Lead Plastic Small Outline (SO) - Wide, 7.50 mm Body [SOIC]

Note: For the most current package drawings, please see the Microchip Packaging Specification located at http://www.microchip.com/packaging

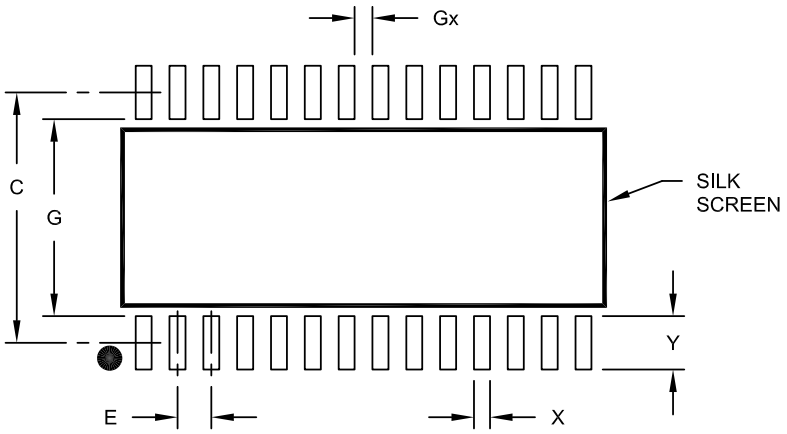

RECOMMENDED LAND PATTERN

Units		MILLIMETERS		
Dimension Limits		MIN	NOM	MAX
Contact Pitch	E		1.27 BSC	
Contact Pad Spacing	C		9.40	
Contact Pad Width (X28)	X			0.60
Contact Pad Length (X28)	Y			2.00
Distance Between Pads	Gx	0.67		
Distance Between Pads	G	7.40		

Notes:

1. Dimensioning and tolerancing per ASME Y14.5M

BSC: Basic Dimension. Theoretically exact value shown without tolerances.

Microchip Technology Drawing No. C04-2052A

Downloaded from Arrow.com.

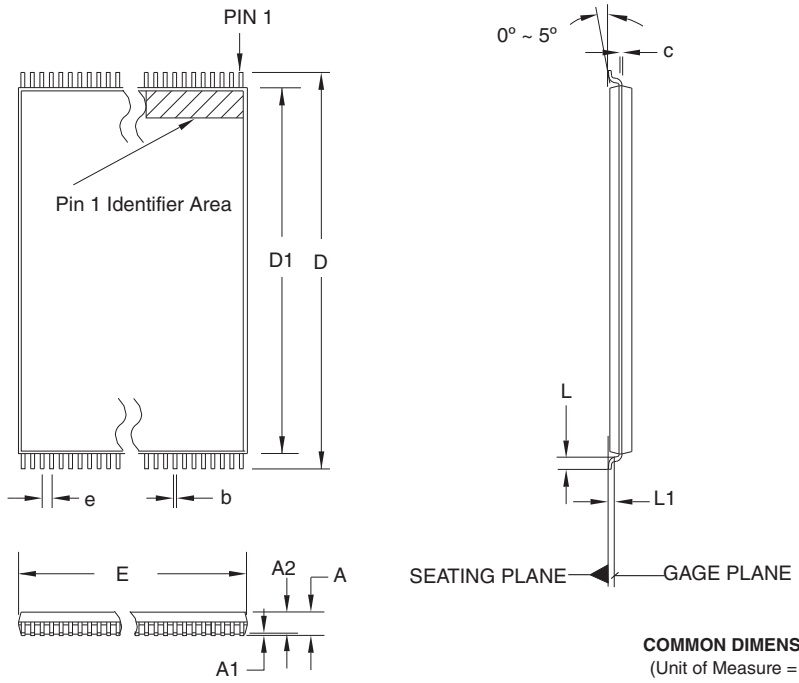

COMMON DIMENSIONS
(Unit of Measure = mm)

SYMBOL	MIN	NOM	MAX	NOTE
A	–	–	1.20	
A1	0.05	–	0.15	
A2	0.90	1.00	1.05	
D	13.20	13.40	13.60	
D1	11.70	11.80	11.90	Note 2
E	7.90	8.00	8.10	Note 2
L	0.50	0.60	0.70	
L1	0.25 BASIC			
b	0.17	0.22	0.27	
c	0.10	–	0.21	
e	0.55 BASIC			

Notes:
1. This package conforms to JEDEC reference MO-183.
2. Dimensions D1 and E do not include mold protrusion. Allowable protrusion on E is 0.15 mm per side and on D1 is 0.25 mm per side.
3. Lead coplanarity is 0.10 mm maximum.

12/06/02

TITLE	DRAWING NO.	REV.
28T, 28-lead (8 x 13.4 mm) Plastic Thin Small Outline Package, Type I (TSOP)	28T	C

Note: For the most current package drawings, please see the Microchip Packaging Specification located at http://www.microchip.com/packaging.

Downloaded from Arrow.com.

8. Revision History

Revision A (October 2020)
Updated to the Microchip template. Microchip DS20006428 replaces Atmel document 0007. Added updated Part Markings to include new trace code format.

Downloaded from Arrow.com.

The Microchip Website

Microchip provides online support via our website at www.microchip.com/. This website is used to make files and information easily available to customers. Some of the content available includes:

- **Product Support** – Data sheets and errata, application notes and sample programs, design resources, user's guides and hardware support documents, latest software releases and archived software
- **General Technical Support** – Frequently Asked Questions (FAQs), technical support requests, online discussion groups, Microchip design partner program member listing
- **Business of Microchip** – Product selector and ordering guides, latest Microchip press releases, listing of seminars and events, listings of Microchip sales offices, distributors and factory representatives

Product Change Notification Service

Microchip's product change notification service helps keep customers current on Microchip products. Subscribers will receive email notification whenever there are changes, updates, revisions or errata related to a specified product family or development tool of interest.

To register, go to www.microchip.com/pcn and follow the registration instructions.

Customer Support

Users of Microchip products can receive assistance through several channels:

- Distributor or Representative
- Local Sales Office
- Embedded Solutions Engineer (ESE)
- Technical Support

Customers should contact their distributor, representative or ESE for support. Local sales offices are also available to help customers. A listing of sales offices and locations is included in this document.

Technical support is available through the website at: www.microchip.com/support

Downloaded from Arrow.com.

Product Identification System

To order or obtain information, e.g., on pricing or delivery, refer to the factory or the listed sales office.

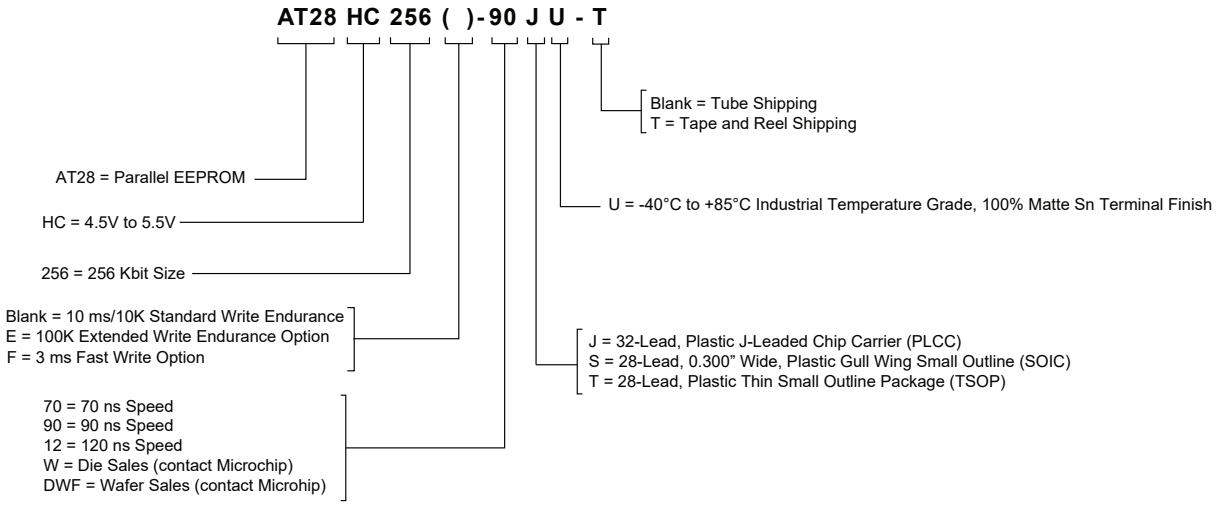

Examples

Table 12-1. AT28HC256 Industrial Ordering Information

Ordering Code	Package Drawing Code	Package Option	t_{ACC}(ns)	Quantity	Operating Range
AT28HC256-70JU	L	J	70	32 Tube	Industrial Temperature (-40°C to +85°C)
AT28HC256-70JU-T				750 Reel	
AT28HC256-70TU	28T	T		234 Tray	
AT28HC256-70TU-T				2000 Reel	
AT28HC256-90JU	L	J	90	32 Tube	
AT28HC256-90JU-T				750 Reel	
AT28HC256-90SU	SO	S		27 Tube	
AT28HC256-90SU-T				1000 Reel	
AT28HC256-90TU	28T	T		234 Tray	
AT28HC256-90TU-T				2000 Reel	
AT28HC256-12JU	L	J	120	32 Tube	
AT28HC256-12JU-T				750 Reel	
AT28HC256-12SU	SO	S		27 Tube	
AT28HC256-12SU-T				1000 Reel	
AT28HC256-12TU	28T	T		234 Tray	
AT28HC256-12TU-T				2000 Reel	

Downloaded from Arrow.com.

Table 12-2. AT28HC256E Industrial Ordering Information

Ordering Code	Package Drawing Code	Package Option	t_{ACC}(ns)	Quantity	Operating Range
AT28HC256E-70JU	L	J	70	32 Tube	Industrial Temperature (-40°C to +85°C)
AT28HC256E-70JU-T				750 Reel	
AT28HC256E-70SU-T	SO	S		1000 Reel	
AT28HC256E-70TU	28T	T		234 Tray	
AT28HC256E-70TU-T				2000 Reel	
AT28HC256E-90JU	L	J	90	32 Tube	
AT28HC256E-90JU-T				750 Reel	
AT28HC256E-90SU	SO	S		27 Tube	
AT28HC256E-90SU-T				1000 Reel	
AT28HC256E-90TU	28T	T		234 Tray	
AT28HC256E-90TU-T				2000 Reel	

Table 12-3. AT28HC256F Industrial Ordering Information

Ordering Code	Package Drawing Code	Package Option	t_{ACC}(ns)	Quantity	Operating Range
AT28HC256F-90JU	L	J	90	32 Tube	Industrial Temperature (-40°C to +85°C)
AT28HC256F-90JU-T				750 Reel	
AT28HC256F-90SU	SO	S		27 Tube	
AT28HC256F-90SU-T				1000 Reel	
AT28HC256F-90TU	28T	T		234 Tray	
AT28HC256F-90TU-T				2000 Reel	

Package Types	
J	32-Lead, Plastic J-leaded Chip Carrier (PLCC)
S	28-Lead, 0.300" Wide, Plastic Gull Wing Small Outline (SOIC)
T	28-Lead, Plastic Thin Small Outline Package (TSOP)
W	Diced Die in Waffle Tray
DWF	Die in Wafer Form Shipped in 6-inch Round Jars
Options	
Blank	Standard Device: Endurance = 10K Write Cycles; Write Time 10 ms
E	High Endurance Option: Endurance = 100K Write Cycles
F	Fast Write Option: Write Time = 3 ms

Microchip Devices Code Protection Feature

Note the following details of the code protection feature on Microchip devices:

Downloaded from Arrow.com.

- Microchip products meet the specifications contained in their particular Microchip Data Sheet.
- Microchip believes that its family of products is secure when used in the intended manner and under normal conditions.
- There are dishonest and possibly illegal methods being used in attempts to breach the code protection features of the Microchip devices. We believe that these methods require using the Microchip products in a manner outside the operating specifications contained in Microchip's Data Sheets. Attempts to breach these code protection features, most likely, cannot be accomplished without violating Microchip's intellectual property rights.
- Microchip is willing to work with any customer who is concerned about the integrity of its code.
- Neither Microchip nor any other semiconductor manufacturer can guarantee the security of its code. Code protection does not mean that we are guaranteeing the product is "unbreakable." Code protection is constantly evolving. We at Microchip are committed to continuously improving the code protection features of our products. Attempts to break Microchip's code protection feature may be a violation of the Digital Millennium Copyright Act. If such acts allow unauthorized access to your software or other copyrighted work, you may have a right to sue for relief under that Act.

Legal Notice

Information contained in this publication is provided for the sole purpose of designing with and using Microchip products. Information regarding device applications and the like is provided only for your convenience and may be superseded by updates. It is your responsibility to ensure that your application meets with your specifications.

THIS INFORMATION IS PROVIDED BY MICROCHIP "AS IS". MICROCHIP MAKES NO REPRESENTATIONS OR WARRANTIES OF ANY KIND WHETHER EXPRESS OR IMPLIED, WRITTEN OR ORAL, STATUTORY OR OTHERWISE, RELATED TO THE INFORMATION INCLUDING BUT NOT LIMITED TO ANY IMPLIED WARRANTIES OF NON-INFRINGEMENT, MERCHANTABILITY, AND FITNESS FOR A PARTICULAR PURPOSE OR WARRANTIES RELATED TO ITS CONDITION, QUALITY, OR PERFORMANCE.

IN NO EVENT WILL MICROCHIP BE LIABLE FOR ANY INDIRECT, SPECIAL, PUNITIVE, INCIDENTAL OR CONSEQUENTIAL LOSS, DAMAGE, COST OR EXPENSE OF ANY KIND WHATSOEVER RELATED TO THE INFORMATION OR ITS USE, HOWEVER CAUSED, EVEN IF MICROCHIP HAS BEEN ADVISED OF THE POSSIBILITY OR THE DAMAGES ARE FORESEEABLE. TO THE FULLEST EXTENT ALLOWED BY LAW, MICROCHIP'S TOTAL LIABILITY ON ALL CLAIMS IN ANY WAY RELATED TO THE INFORMATION OR ITS USE WILL NOT EXCEED THE AMOUNT OF FEES, IF ANY, THAT YOU HAVE PAID DIRECTLY TO MICROCHIP FOR THE INFORMATION. Use of Microchip devices in life support and/or safety applications is entirely at the buyer's risk, and the buyer agrees to defend, indemnify and hold harmless Microchip from any and all damages, claims, suits, or expenses resulting from such use. No licenses are conveyed, implicitly or otherwise, under any Microchip intellectual property rights unless otherwise stated.

Trademarks

The Microchip name and logo, the Microchip logo, Adaptec, AnyRate, AVR, AVR logo, AVR Freaks, BesTime, BitCloud, chipKIT, chipKIT logo, CryptoMemory, CryptoRF, dsPIC, FlashFlex, flexPWR, HELDO, IGLOO, JukeBlox, KeeLoq, Kleer, LANCheck, LinkMD, maXStylus, maXTouch, MediaLB, megaAVR, Microsemi, Microsemi logo, MOST, MOST logo, MPLAB, OptoLyzer, PackeTime, PIC, picoPower, PICSTART, PIC32 logo, PolarFire, Prochip Designer, QTouch, SAM-BA, SenGenuity, SpyNIC, SST, SST Logo, SuperFlash, Symmetricom, SyncServer, Tachyon, TimeSource, tinyAVR, UNI/O, Vectron, and XMEGA are registered trademarks of Microchip Technology Incorporated in the U.S.A. and other countries.

AgileSwitch, APT, ClockWorks, The Embedded Control Solutions Company, EtherSynch, FlashTec, Hyper Speed Control, HyperLight Load, IntelliMOS, Libero, motorBench, mTouch, Powermite 3, Precision Edge, ProASIC, ProASIC Plus, ProASIC Plus logo, Quiet-Wire, SmartFusion, SyncWorld, Temux, TimeCesium, TimeHub, TimePictra, TimeProvider, WinPath, and ZL are registered trademarks of Microchip Technology Incorporated in the U.S.A.

Adjacent Key Suppression, AKS, Analog-for-the-Digital Age, Any Capacitor, AnyIn, AnyOut, Augmented Switching, BlueSky, BodyCom, CodeGuard, CryptoAuthentication, CryptoAutomotive, CryptoCompanion, CryptoController, dsPICDEM, dsPICDEM.net, Dynamic Average Matching, DAM, ECAN, Espresso T1S, EtherGREEN, IdealBridge, In-Circuit Serial Programming, ICSP, INICnet, Intelligent Paralleling, Inter-Chip Connectivity, JitterBlocker, maxCrypto, maxView, memBrain, Mindi, MiWi, MPASM, MPF, MPLAB Certified logo, MPLIB, MPLINK, MultiTRAK, NetDetach,

Downloaded from Arrow.com.

Omniscient Code Generation, PICDEM, PICDEM.net, PICkit, PICtail, PowerSmart, PureSilicon, QMatrix, REAL ICE, Ripple Blocker, RTAX, RTG4, SAM-ICE, Serial Quad I/O, simpleMAP, SimpliPHY, SmartBuffer, SMART-I.S., storClad, SQI, SuperSwitcher, SuperSwitcher II, Switchtec, SynchroPHY, Total Endurance, TSHARC, USBCheck, VariSense, VectorBlox, VeriPHY, ViewSpan, WiperLock, XpressConnect, and ZENA are trademarks of Microchip Technology Incorporated in the U.S.A. and other countries.

SQTP is a service mark of Microchip Technology Incorporated in the U.S.A.

The Adaptec logo, Frequency on Demand, Silicon Storage Technology, and Symmcom are registered trademarks of Microchip Technology Inc. in other countries.

GestIC is a registered trademark of Microchip Technology Germany II GmbH & Co. KG, a subsidiary of Microchip Technology Inc., in other countries.

All other trademarks mentioned herein are property of their respective companies.

© 2020, Microchip Technology Incorporated, Printed in the U.S.A., All Rights Reserved.

ISBN: 978-1-5224-6786-1

AMBA, Arm, Arm7, Arm7TDMI, Arm9, Arm11, Artisan, big.LITTLE, Cordio, CoreLink, CoreSight, Cortex, DesignStart, DynamIQ, Jazelle, Keil, Mali, Mbed, Mbed Enabled, NEON, POP, RealView, SecurCore, Socrates, Thumb, TrustZone, ULINK, ULINK2, ULINK-ME, ULINK-PLUS, ULINKpro, µVision, Versatile are trademarks or registered trademarks of Arm Limited (or its subsidiaries) in the US and/or elsewhere.

Quality Management System

For information regarding Microchip's Quality Management Systems, please visit www.microchip.com/quality.

Downloaded from Arrow.com.

Worldwide Sales and Service

AMERICAS	ASIA/PACIFIC	ASIA/PACIFIC	EUROPE
Corporate Office 2355 West Chandler Blvd. Chandler, AZ 85224-6199 Tel: 480-792-7200 Fax: 480-792-7277 Technical Support: www.microchip.com/support Web Address: www.microchip.com **Atlanta** Duluth, GA Tel: 678-957-9614 Fax: 678-957-1455 **Austin, TX** Tel: 512-257-3370 **Boston** Westborough, MA Tel: 774-760-0087 Fax: 774-760-0088 **Chicago** Itasca, IL Tel: 630-285-0071 Fax: 630-285-0075 **Dallas** Addison, TX Tel: 972-818-7423 Fax: 972-818-2924 **Detroit** Novi, MI Tel: 248-848-4000 **Houston, TX** Tel: 281-894-5983 **Indianapolis** Noblesville, IN Tel: 317-773-8323 Fax: 317-773-5453 Tel: 317-536-2380 **Los Angeles** Mission Viejo, CA Tel: 949-462-9523 Fax: 949-462-9608 Tel: 951-273-7800 **Raleigh, NC** Tel: 919-844-7510 **New York, NY** Tel: 631-435-6000 **San Jose, CA** Tel: 408-735-9110 Tel: 408-436-4270 **Canada - Toronto** Tel: 905-695-1980 Fax: 905-695-2078	**Australia - Sydney** Tel: 61-2-9868-6733 **China - Beijing** Tel: 86-10-8569-7000 **China - Chengdu** Tel: 86-28-8665-5511 **China - Chongqing** Tel: 86-23-8980-9588 **China - Dongguan** Tel: 86-769-8702-9880 **China - Guangzhou** Tel: 86-20-8755-8029 **China - Hangzhou** Tel: 86-571-8792-8115 **China - Hong Kong SAR** Tel: 852-2943-5100 **China - Nanjing** Tel: 86-25-8473-2460 **China - Qingdao** Tel: 86-532-8502-7355 **China - Shanghai** Tel: 86-21-3326-8000 **China - Shenyang** Tel: 86-24-2334-2829 **China - Shenzhen** Tel: 86-755-8864-2200 **China - Suzhou** Tel: 86-186-6233-1526 **China - Wuhan** Tel: 86-27-5980-5300 **China - Xian** Tel: 86-29-8833-7252 **China - Xiamen** Tel: 86-592-2388138 **China - Zhuhai** Tel: 86-756-3210040	**India - Bangalore** Tel: 91-80-3090-4444 **India - New Delhi** Tel: 91-11-4160-8631 **India - Pune** Tel: 91-20-4121-0141 **Japan - Osaka** Tel: 81-6-6152-7160 **Japan - Tokyo** Tel: 81-3-6880- 3770 **Korea - Daegu** Tel: 82-53-744-4301 **Korea - Seoul** Tel: 82-2-554-7200 **Malaysia - Kuala Lumpur** Tel: 60-3-7651-7906 **Malaysia - Penang** Tel: 60-4-227-8870 **Philippines - Manila** Tel: 63-2-634-9065 **Singapore** Tel: 65-6334-8870 **Taiwan - Hsin Chu** Tel: 886-3-577-8366 **Taiwan - Kaohsiung** Tel: 886-7-213-7830 **Taiwan - Taipei** Tel: 886-2-2508-8600 **Thailand - Bangkok** Tel: 66-2-694-1351 **Vietnam - Ho Chi Minh** Tel: 84-28-5448-2100	**Austria - Wels** Tel: 43-7242-2244-39 Fax: 43-7242-2244-393 **Denmark - Copenhagen** Tel: 45-4485-5910 Fax: 45-4485-2829 **Finland - Espoo** Tel: 358-9-4520-820 **France - Paris** Tel: 33-1-69-53-63-20 Fax: 33-1-69-30-90-79 **Germany - Garching** Tel: 49-8931-9700 **Germany - Haan** Tel: 49-2129-3766400 **Germany - Heilbronn** Tel: 49-7131-72400 **Germany - Karlsruhe** Tel: 49-721-625370 **Germany - Munich** Tel: 49-89-627-144-0 Fax: 49-89-627-144-44 **Germany - Rosenheim** Tel: 49-8031-354-560 **Israel - Ra'anana** Tel: 972-9-744-7705 **Italy - Milan** Tel: 39-0331-742611 Fax: 39-0331-466781 **Italy - Padova** Tel: 39-049-7625286 **Netherlands - Drunen** Tel: 31-416-690399 Fax: 31-416-690340 **Norway - Trondheim** Tel: 47-72884388 **Poland - Warsaw** Tel: 48-22-3325737 **Romania - Bucharest** Tel: 40-21-407-87-50 **Spain - Madrid** Tel: 34-91-708-08-90 Fax: 34-91-708-08-91 **Sweden - Gothenberg** Tel: 46-31-704-60-40 **Sweden - Stockholm** Tel: 46-8-5090-4654 **UK - Wokingham** Tel: 44-118-921-5800 Fax: 44-118-921-5820

Downloaded from Arrow.com.