NOTES:

© 2004-2020 Microchip Technology Inc.

Downloaded from Arrow.com.

1.0 ELECTRICAL CHARACTERISTICS

Absolute Maximum Ratings†

$V_{DD} – V_{SS}$ 7.0V
Current at Analog Input Pins (V_{IN}+, V_{IN}-).....±2 mA
Analog Inputs (V_{IN}+, V_{IN}-)†† ..... V_{SS} – 1.0V to V_{DD} + 1.0V
All Other Inputs and Outputs ..... V_{SS} – 0.3V to V_{DD} + 0.3V
Difference Input Voltage ..... $|V_{DD} – V_{SS}|$
Output Short-Circuit Current .....Continuous
Current at Output and Supply Pins .....±30 mA
Storage Temperature .....-65°C to +150°C
Maximum Junction Temperature (T_J).....+150°C
ESD Protection on All Pins (HBM; MM) ..... ≥ 4 kV; 300V

† Notice: Stresses above those listed under "Absolute Maximum Ratings" may cause permanent damage to the device. This is a stress rating only and functional operation of the device at those or any other conditions above those indicated in the operational listings of this specification is not implied. Exposure to maximum rating conditions for extended periods may affect device reliability.

†† See **Section 4.1.2 "Input Voltage and Current Limits"**.

DC ELECTRICAL CHARACTERISTICS

Electrical Characteristics: Unless otherwise indicated, T_A = +25°C, V_{DD} = +1.8V to +5.5V, V_{SS} = GND, V_{CM} = V_{DD}/2, R_L = 100 kΩ to V_{DD}/2 and V_{OUT} ≈ V_{DD}/2.

Parameters	Sym	Min	Typ	Max	Units	Conditions
Input Offset						
Input Offset Voltage	V_{OS}	-5.0	—	+5.0	mV	V_{CM} = V_{SS}
Extended Temperature	V_{OS}	-7.0	—	+7.0	mV	T_A = -40°C to +125°C, V_{CM} = V_{SS} **(Note 1)**
Input Offset Drift with Temperature	$\Delta V_{OS}/\Delta T_A$	—	±3.0	—	µV/°C	T_A= -40°C to +125°C, V_{CM} = V_{SS}
Power Supply Rejection Ratio	PSRR	—	83	—	dB	V_{CM} = V_{SS}
Input Bias Current and Impedance						
Input Bias Current:	I_B	—	±1.0	—	pA	
At Temperature	I_B	—	20	—	pA	T_A = +85°C
At Temperature	I_B	—	1100	—	pA	T_A = +125°C
Input Offset Current	I_{OS}	—	±1.0	—	pA	
Common-Mode Input Impedance	Z_{CM}	—	10^{13}||6	—	Ω||pF	
Differential Input Impedance	Z_{DIFF}	—	10^{13}||3	—	Ω||pF	
Common-Mode						
Common-Mode Input Range	V_{CMR}	V_{SS} – 0.3	—	V_{DD} + 0.3	V	
Common-Mode Rejection Ratio	CMRR	61	75	—	dB	V_{CM} = -0.3V to 5.3V, V_{DD} = 5V
Open-Loop Gain						
DC Open-Loop Gain (large signal)	A_{OL}	90	110	—	dB	V_{OUT} = 0.3V to V_{DD} – 0.3V, V_{CM} = V_{SS}
Output						
Maximum Output Voltage Swing	V_{OL}, V_{OH}	V_{SS} + 35	—	V_{DD} – 35	mV	R_L =10 kΩ, 0.5V Input Overdrive
Output Short-Circuit Current	I_{SC}	—	±6	—	mA	V_{DD} = 1.8V
	I_{SC}	—	±23	—	mA	V_{DD} = 5.5V
Power Supply						
Supply Voltage	V_{DD}	1.8	—	6.0	V	
Quiescent Current per Amplifier	I_Q	10	20	30	µA	I_O = 0, V_{CM} = V_{DD} – 0.5V

Note 1: The SC70 package is only tested at +25°C.
2: All parts with date codes of February 2007 and later have been screened to ensure operation at V_{DD} = 6.0V. However, the other minimum and maximum specifications are measured at 1.8V and 5.5V.

© 2004-2020 Microchip Technology Inc.

Downloaded from Arrow.com.

AC ELECTRICAL CHARACTERISTICS

Electrical Characteristics: Unless otherwise indicated, T_A = +25°C, V_{DD} = +1.8 to 5.5V, V_{SS} = GND, V_{CM} = V_{DD}/2, V_{OUT} ≈ V_{DD}/2, R_L = 100 kΩ to V_{DD}/2 and C_L = 60 pF.

Parameters	Sym	Min	Typ	Max	Units	Conditions
AC Response						
Gain Bandwidth Product	GBWP	—	300	—	kHz	
Phase Margin	PM	—	65	—	°	G = +1 V/V
Slew Rate	SR	—	0.15	—	V/µs	
Noise						
Input Noise Voltage	E_{ni}	—	6.0	—	μV_{P-P}	f = 0.1 Hz to 10 Hz
Input Noise Voltage Density	e_{ni}	—	52	—	nV/√Hz	f = 1 kHz
Input Noise Current Density	i_{ni}	—	0.6	—	fA/√Hz	f = 1 kHz

TEMPERATURE CHARACTERISTICS

Electrical Characteristics: Unless otherwise indicated, V_{DD} = +1.8V to +5.5V and V_{SS} = GND.

Parameters	Sym	Min	Typ	Max	Units	Conditions
Temperature Ranges						
Extended Temperature Range	T_A	-40	—	+125	°C	
Operating Temperature Range	T_A	-40	—	+125	°C	**Note 1**
Storage Temperature Range	T_A	-65	—	+150	°C	
Thermal Package Resistances						
Thermal Resistance, 5L-SC70	θ_{JA}	—	331	—	°C/W	
Thermal Resistance, 5L-SOT-23	θ_{JA}	—	256	—	°C/W	
Thermal Resistance, 8L-DFN	θ_{JA}	—	84.5	—	°C/W	
Thermal Resistance, 8L-MSOP	θ_{JA}	—	206	—	°C/W	
Thermal Resistance, 8L-TDFN	θ_{JA}	—	41	—	°C/W	
Thermal Resistance, 8L-PDIP	θ_{JA}	—	85	—	°C/W	
Thermal Resistance, 8L-SOIC	θ_{JA}	—	163	—	°C/W	
Thermal Resistance, 14L-PDIP	θ_{JA}	—	70	—	°C/W	
Thermal Resistance, 14L-SOIC	θ_{JA}	—	120	—	°C/W	
Thermal Resistance, 14L-TSSOP	θ_{JA}	—	100	—	°C/W	

Note 1: The internal Junction Temperature (T_J) must not exceed the absolute maximum specification of +150°C.

© 2004-2020 Microchip Technology Inc.

Downloaded from Arrow.com.

1.1 Test Circuits

The test circuits used for the DC and AC tests are shown in Figure 1-1 and Figure 1-2. The bypass capacitors are laid out according to the rules discussed in **Section 4.6 "PCB Surface Leakage"**.

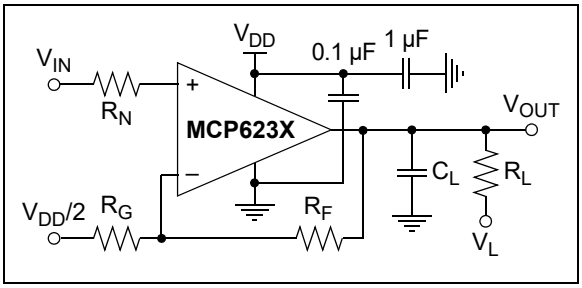

FIGURE 1-1: *AC and DC Test Circuit for Most Noninverting Gain Conditions.*

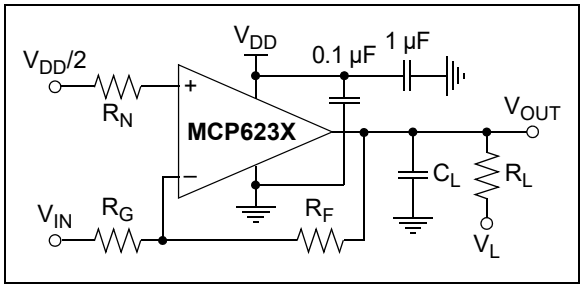

FIGURE 1-2: *AC and DC Test Circuit for Most Inverting Gain Conditions.*

Downloaded from Arrow.com.

NOTES:

© 2004-2020 Microchip Technology Inc.

Downloaded from Arrow.com.

2.0 TYPICAL PERFORMANCE CURVES

Note: The graphs and tables provided following this note are a statistical summary based on a limited number of samples and are provided for informational purposes only. The performance characteristics listed herein are not tested or guaranteed. In some graphs or tables, the data presented may be outside the specified operating range (e.g., outside specified power supply range) and therefore outside the warranted range.

Note: Unless otherwise indicated, T_A = +25°C, V_{DD} = +1.8V to +5.5V, V_{SS} = GND, V_{CM} = V_{DD}/2, V_{OUT} ≈ V_{DD}/2, R_L = 100 kΩ to V_{DD}/2 and C_L = 60 pF.

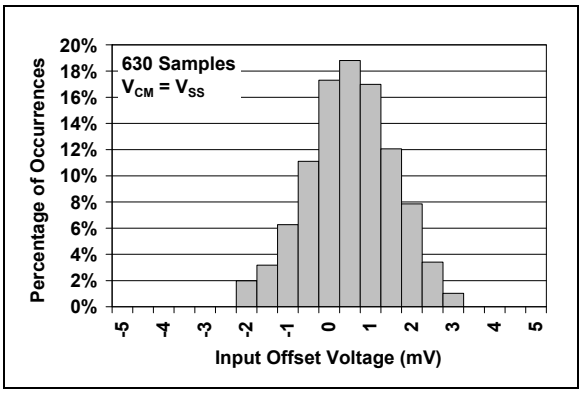

FIGURE 2-1: *Input Offset Voltage.*

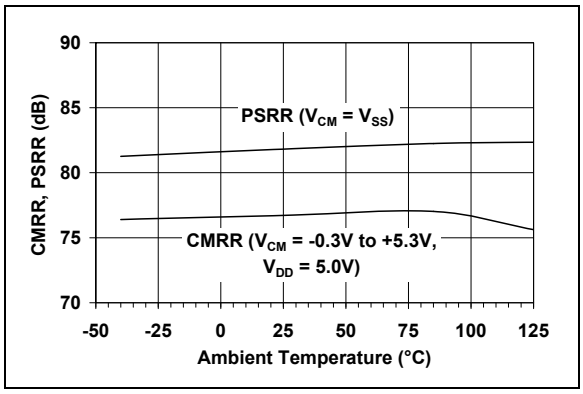

FIGURE 2-4: *CMRR, PSRR vs. Ambient Temperature.*

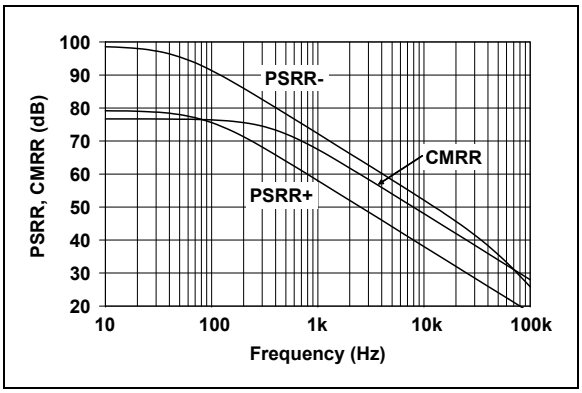

FIGURE 2-2: *PSRR, CMRR vs. Frequency.*

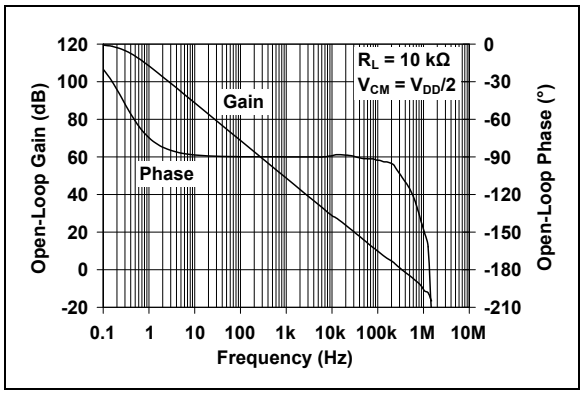

FIGURE 2-5: *Open-Loop Gain, Phase vs. Frequency.*

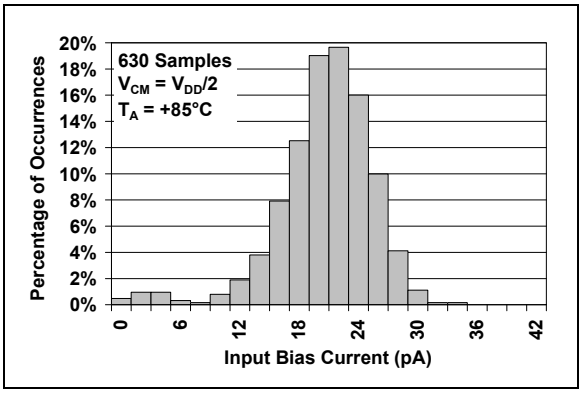

FIGURE 2-3: *Input Bias Current at +85°C.*

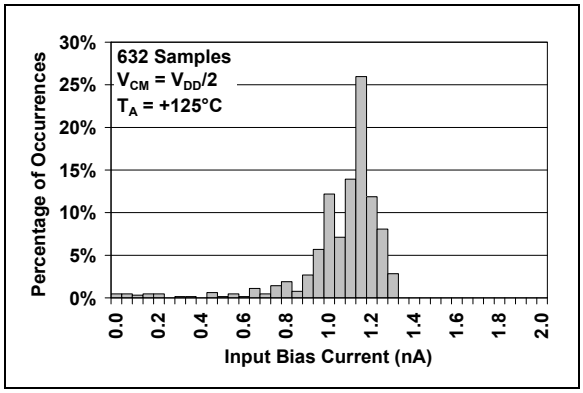

FIGURE 2-6: *Input Bias Current at +125°C.*

Downloaded from Arrow.com.

Note: Unless otherwise indicated, T_A = +25°C, V_{DD} = +1.8V to +5.5V, V_{SS} = GND, V_{CM} = V_{DD}/2, V_{OUT} ≈ V_{DD}/2, R_L = 100 kΩ to V_{DD}/2 and C_L = 60 pF.

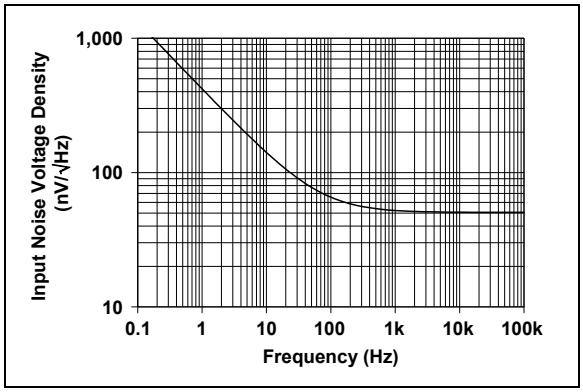

FIGURE 2-7: *Input Noise Voltage Density vs. Frequency.*

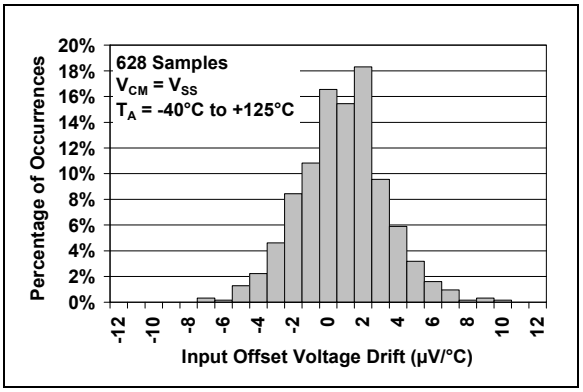

FIGURE 2-10: *Input Offset Voltage Drift.*

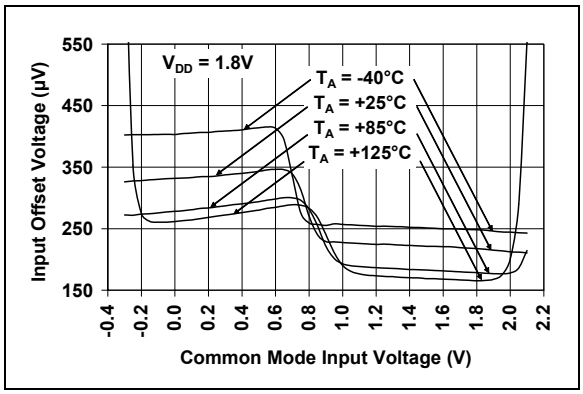

FIGURE 2-8: *Input Offset Voltage vs. Common-Mode Input Voltage at V_{DD} = 1.8V.*

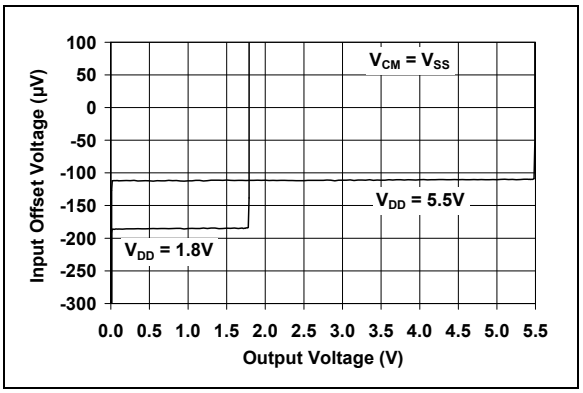

FIGURE 2-11: *Input Offset Voltage vs. Output Voltage.*

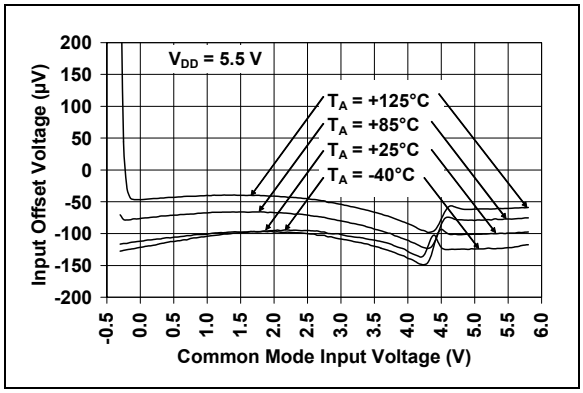

FIGURE 2-9: *Input Offset Voltage vs. Common-Mode Input Voltage at V_{DD} = 5.5V.*

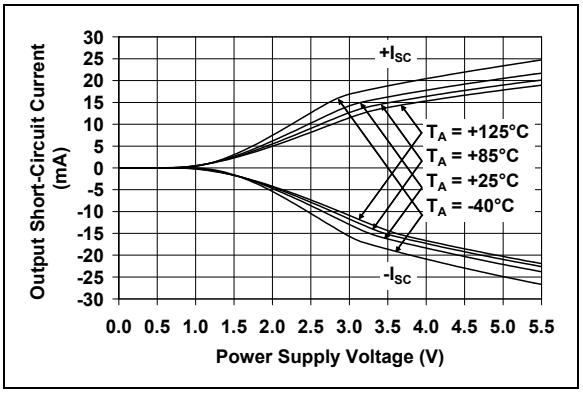

FIGURE 2-12: *Output Short-Circuit Current vs. Ambient Temperature.*

© 2004-2020 Microchip Technology Inc.

Downloaded from Arrow.com.

Note: Unless otherwise indicated, T_A = +25°C, V_{DD} = +1.8V to +5.5V, V_{SS} = GND, V_{CM} = V_{DD}/2, V_{OUT} ≈ V_{DD}/2, R_L = 100 kΩ to V_{DD}/2 and C_L = 60 pF.

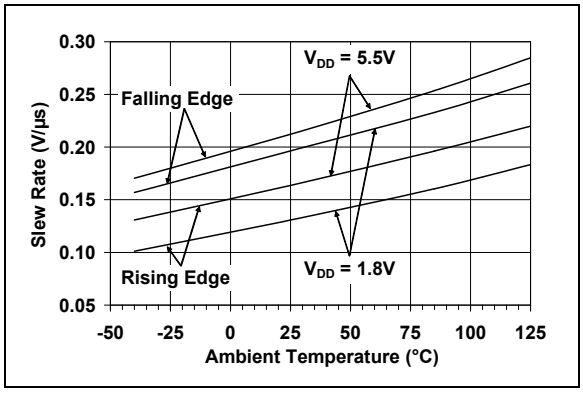

FIGURE 2-13: *Slew Rate vs. Ambient Temperature.*

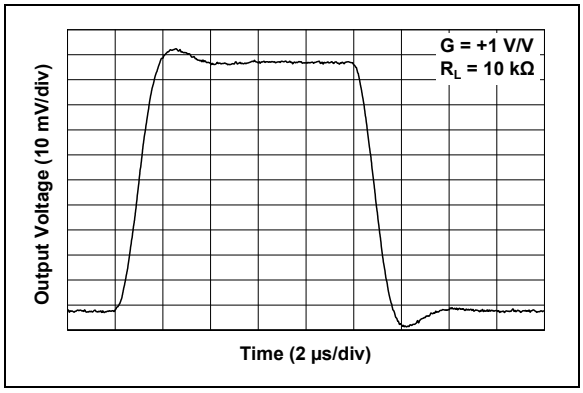

FIGURE 2-16: *Small-Signal, Noninverting Pulse Response.*

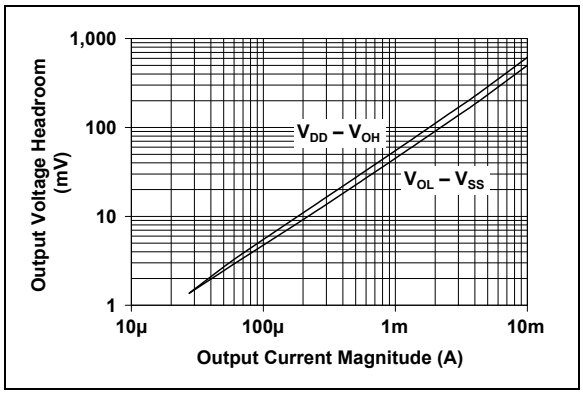

FIGURE 2-14: *Output Voltage Headroom vs. Output Current Magnitude.*

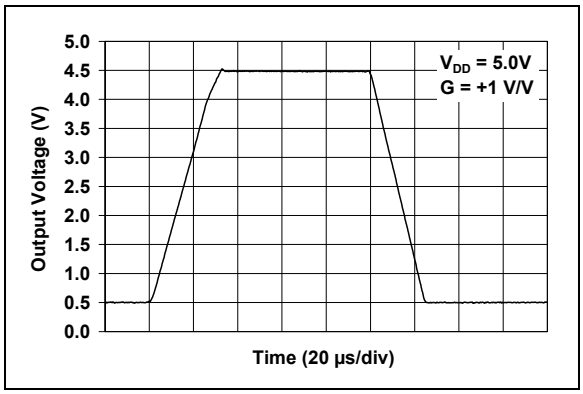

FIGURE 2-17: *Large-Signal, Noninverting Pulse Response.*

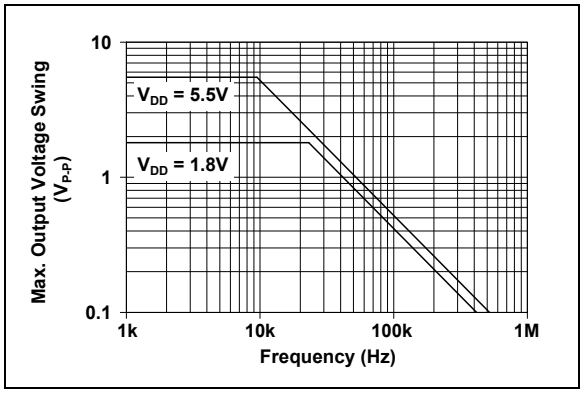

FIGURE 2-15: *Maximum Output Voltage Swing vs. Frequency.*

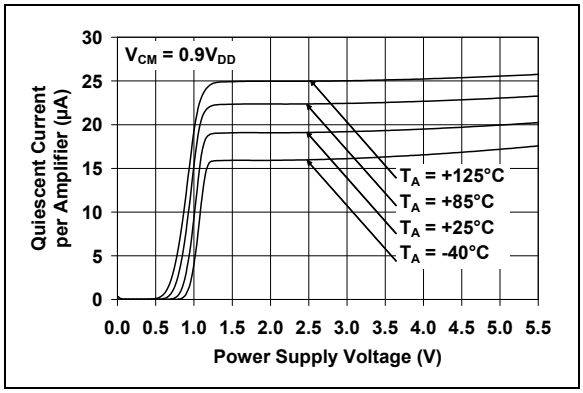

FIGURE 2-18: *Quiescent Current vs. Power Supply Voltage.*

Downloaded from Arrow.com.

Note: Unless otherwise indicated, T_A = +25°C, V_{DD} = +1.8V to +5.5V, V_{SS} = GND, V_{CM} = V_{DD}/2, V_{OUT} ≈ V_{DD}/2, R_L = 100 kΩ to V_{DD}/2 and C_L = 60 pF.

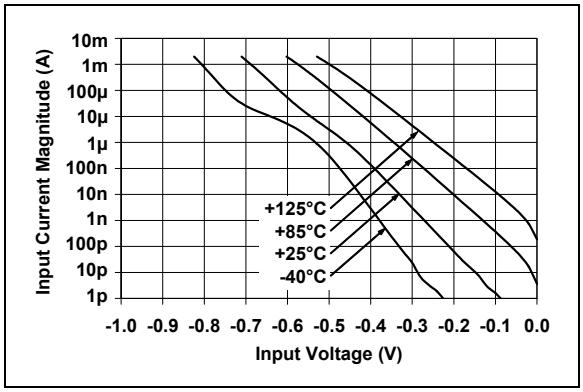

FIGURE 2-19: *Measured Input Current vs. Input Voltage (below V_{SS}).*

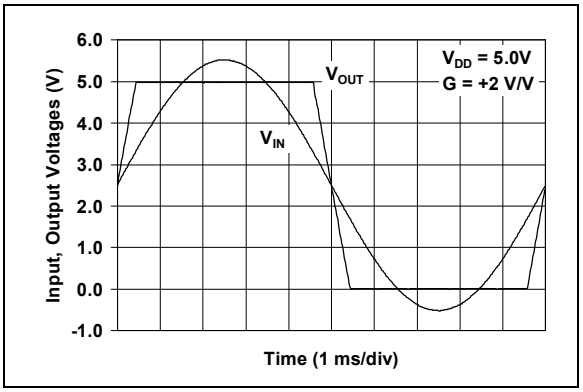

FIGURE 2-20: *The MCP6231/1R/1U/2/4 Show No Phase Reversal.*

© 2004-2020 Microchip Technology Inc.

Downloaded from Arrow.com.

3.0 PIN DESCRIPTIONS

Descriptions of the pins are listed in Table 3-1 (single op amps) and Table 3-2 (dual and quad op amps).

TABLE 3-1: PIN FUNCTION TABLE FOR SINGLE OP AMPS

MCP6231		MCP6231R	MCP6231U	Symbol	Description
DFN, MSOP, PDIP, SOIC	SOT-23-5	SOT-23-5	SOT-23-5 SC70		
6	1	1	4	V_{OUT}	Analog Output
2	4	4	3	V_{IN}-	Inverting Input
3	3	3	1	V_{IN}+	Noninverting Input
7	5	2	5	V_{DD}	Positive Power Supply
4	2	5	2	V_{SS}	Negative Power Supply
1, 5, 8	—	—	—	NC	No Internal Connection
9	—	—	—	EP	Exposed Thermal Pad (EP); must be connected to V_{SS}.

TABLE 3-2: PIN FUNCTION TABLE FOR DUAL AND QUAD OP AMPS

MCP6232	MCP6234	Symbol	Description
MSOP, PDIP, SOIC, TDFN	PDIP, SOIC, TSSOP		
1	1	V_{OUTA}	Analog Output (Op Amp A)
2	2	V_{INA}-	Inverting Input (Op Amp A)
3	3	V_{INA}+	Noninverting Input (Op Amp A)
8	4	V_{DD}	Positive Power Supply
5	5	V_{INB}+	Noninverting Input (Op Amp B)
6	6	V_{INB}-	Inverting Input (Op Amp B)
7	7	V_{OUTB}	Analog Output (Op Amp B)
—	8	V_{OUTC}	Analog Output (Op Amp C)
—	9	V_{INC}-	Inverting Input (Op Amp C)
—	10	V_{INC}+	Noninverting Input (Op Amp C)
4	11	V_{SS}	Negative Power Supply
—	12	V_{IND}+	Noninverting Input (Op Amp D)
—	13	V_{IND}-	Inverting Input (Op Amp D)
—	14	V_{OUTD}	Analog Output (Op Amp D)
9	—	—	Exposed Thermal Pad (EP); must be connected to V_{SS}.

© 2004-2020 Microchip Technology Inc.

Downloaded from Arrow.com.

3.1 Analog Outputs

The output pins are low-impedance voltage sources.

3.2 Analog Inputs

The noninverting and inverting inputs are high-impedance CMOS inputs with low bias currents.

3.3 Power Supply (V_{SS} and V_{DD})

The positive power supply (V_{DD}) is 1.8V to 6.0V higher than the negative power supply (V_{SS}). For normal operation, the other pins are between V_{SS} and V_{DD}.

Typically, these parts are used in a single (positive) supply configuration. In this case, V_{SS} is connected to ground and V_{DD} is connected to the supply. V_{DD} will need bypass capacitors.

3.4 Exposed Thermal Pad (EP)

There is an internal electrical connection between the Exposed Thermal Pad (EP) and the V_{SS} pin; they must be connected to the same potential on the Printed Circuit Board (PCB).

© 2004-2020 Microchip Technology Inc.

Downloaded from Arrow.com.

4.0 APPLICATION INFORMATION

The MCP6231/1R/1U/2/4 family of op amps is manufactured using Microchip's state-of-the-art CMOS process and is specifically designed for low-cost, low-power and general purpose applications. The low supply voltage, low quiescent current and wide bandwidth makes the MCP6231/1R/1U/2/4 ideal for battery-powered applications.

4.1 Rail-to-Rail Inputs

4.1.1 PHASE REVERSAL

The MCP6231/1R/1U/2/4 op amp is designed to prevent phase reversal when the input pins exceed the supply voltages. Figure 4-1 shows the input voltage exceeding the supply voltage without any phase reversal.

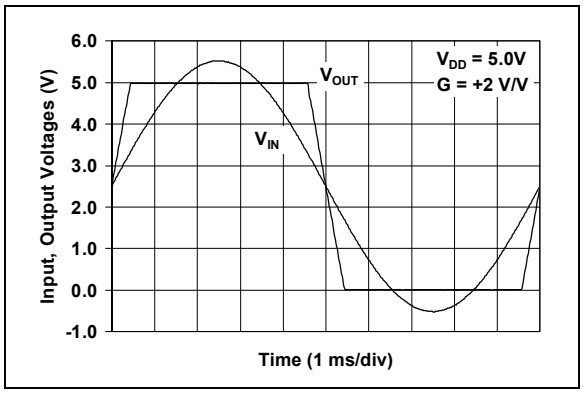

FIGURE 4-1: *The MCP6231/1R/1U/2/4 Show No Phase Reversal.*

4.1.2 INPUT VOLTAGE AND CURRENT LIMITS

The ESD protection on the inputs can be depicted as shown in Figure 4-2. This structure was chosen to protect the input transistors and to minimize input bias current (I_B). The input ESD diodes clamp the inputs when they try to go more than one diode drop below V_{SS}. They also clamp any voltages that go too far above V_{DD}; their breakdown voltage is high enough to allow normal operation and low enough to bypass quick ESD events within the specified limits.

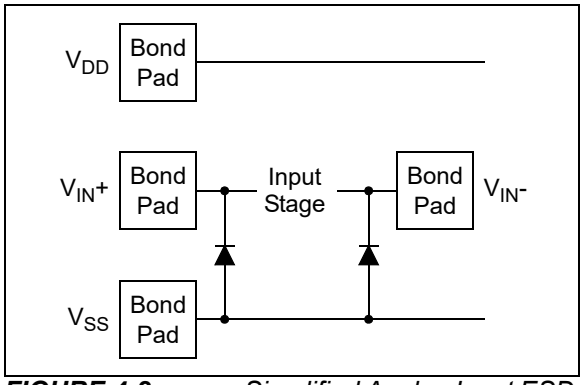

FIGURE 4-2: *Simplified Analog Input ESD Structures.*

In order to prevent damage and/or improper operation of these op amps, the circuit they are in must limit the currents and voltages at the V_{IN}+ and V_{IN}- pins (see **Absolute Maximum Ratings†** at the beginning of **Section 1.0 "Electrical Characteristics"**). Figure 4-3 shows the recommended approach to protecting these inputs. The internal ESD diodes prevent the input pins (V_{IN}+ and V_{IN}-) from going too far below ground and the resistors, R_1 and R_2, limit the possible current drawn out of the input pins. Diodes D_1 and D_2 prevent the input pins (V_{IN}+ and V_{IN}-) from going too far above V_{DD} and dump any currents onto V_{DD}. When implemented as shown, resistors R_1 and R_2, also limit the current through D_1 and D_2.

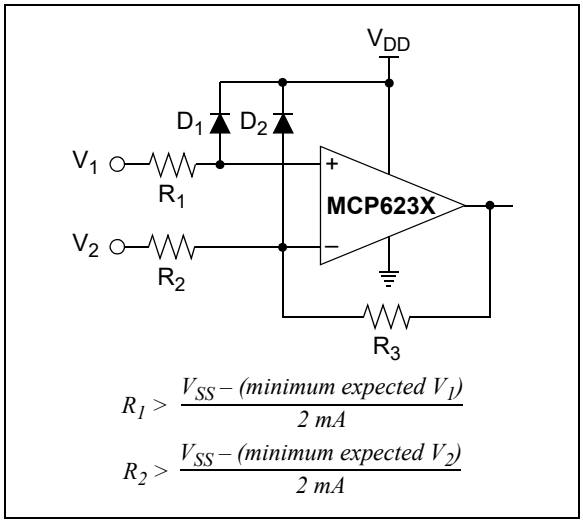

FIGURE 4-3: *Protecting the Analog Inputs.*

It is also possible to connect the diodes to the left of resistors, R_1 and R_2. In this case, current through the diodes, D_1 and D_2, needs to be limited by some other mechanism. The resistors then serve as in-rush current limiters; the DC current into the input pins (V_{IN}+ and V_{IN}-) should be very small.

Downloaded from Arrow.com.

A significant amount of current can flow out of the inputs when the Common-mode voltage (V_{CM}) is below ground (V_{SS}); see Figure 2-19. Applications that are high-impedance may need to limit the usable voltage range.

4.1.3 NORMAL OPERATION

The input stage of the MCP6231/1R/1U/2/4 op amps use two differential CMOS input stages in parallel. One operates at low Common-mode input voltage (V_{CM}), while the other operates at high V_{CM}. With this topology, the device operates with V_{CM} up to 0.3V above V_{DD} and 0.3V below V_{SS}.

4.2 Rail-to-Rail Output

The output voltage range of the MCP6231/1R/1U/2/4 op amps is V_{DD} – 35 mV (maximum) and V_{SS} + 35 mV (minimum) when R_L = 10 kΩ is connected to $V_{DD}/2$ and V_{DD} = 5.5V. Refer to Figure 2-14 for more information.

4.3 Capacitive Loads

Driving large capacitive loads can cause stability problems for voltage feedback op amps. As the load capacitance increases, the feedback loop's phase margin decreases and the closed-loop bandwidth is reduced. This produces gain peaking in the frequency response, with overshoot and ringing in the step response. A unity gain buffer (G = +1) is the most sensitive to capacitive loads, but all gains show the same general behavior.

When driving large capacitive loads with these op amps (e.g., >60 pF when G = +1), a small series resistor at the output (R_{ISO} in Figure 4-4) improves the feedback loop's phase margin (stability) by making the output load resistive at higher frequencies. The bandwidth will be generally lower than the bandwidth with no capacitive load.

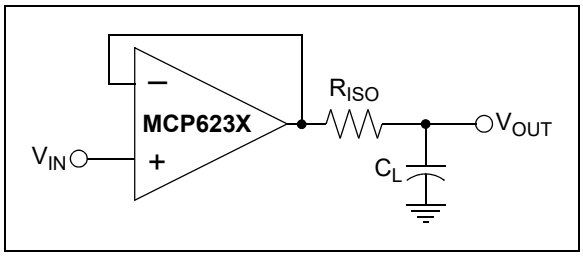

FIGURE 4-4: *Output Resistor, R_{ISO}, Stabilizes Large Capacitive Loads.*

Figure 4-5 gives recommended R_{ISO} values for different capacitive loads and gains. The x-axis is the normalized load capacitance (C_L/G_N), where G_N is the circuit's noise gain. For noninverting gains, G_N and the signal gain are equal. For inverting gains, G_N is 1 + |Signal Gain| (e.g., –1 V/V gives G_N = +2 V/V).

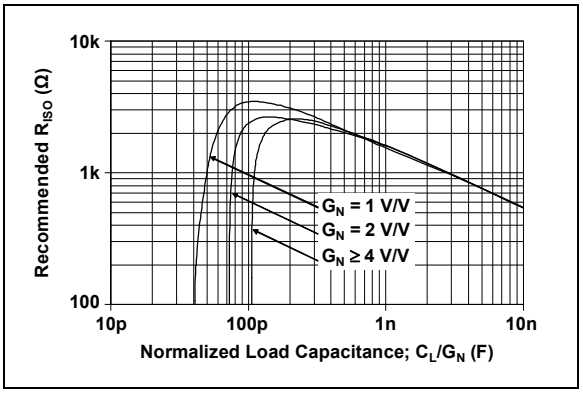

FIGURE 4-5: *Recommended R_{ISO} Values for Capacitive Loads.*

After selecting R_{ISO} for your circuit, double-check the resulting frequency response peaking and step response overshoot. Evaluation on the bench and simulations with the MCP6231/1R/1U/2/4 SPICE macro model are very helpful. Modify R_{ISO}'s value until the response is reasonable.

4.4 Supply Bypass

With this op amp, the power supply pin (V_{DD} for single-supply) should have a local bypass capacitor (i.e., 0.01 µF to 0.1 µF) within 2 mm for good high-frequency performance. It can use a bulk capacitor (i.e., 1 µF or larger) within 100 mm to provide large, slow currents. This bulk capacitor can be shared with other nearby analog parts.

4.5 Unused Op Amps

An unused op amp in a quad package (MCP6234) should be configured as shown in Figure 4-6. Both circuits prevent the output from toggling and causing crosstalk. Circuit A can use any reference voltage between the supplies, provides a buffered DC voltage and minimizes the supply current draw of the unused op amp. Circuit B minimizes the number of components, but may draw a little more supply current for the unused op amp.

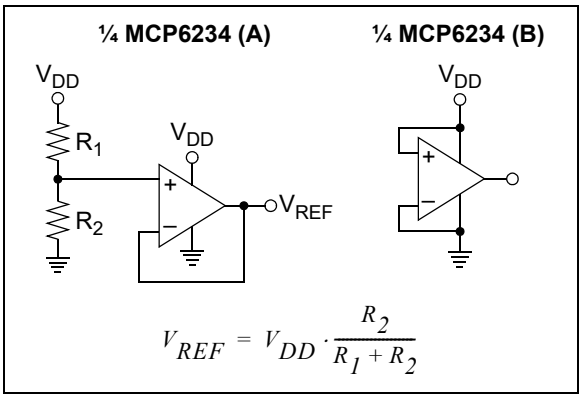

FIGURE 4-6: *Unused Op Amps.*

© 2004-2020 Microchip Technology Inc.

Downloaded from Arrow.com.

4.6 PCB Surface Leakage

In applications where low input bias current is critical, Printed Circuit Board (PCB) surface leakage effects need to be considered. Surface leakage is caused by humidity, dust or other contamination on the board. Under low humidity conditions, a typical resistance between nearby traces is $10^{12}\Omega$. A 5V difference would cause 5 pA of current to flow, which is greater than the MCP6231/1R/1U/2/4 family's bias current at +25°C (1 pA, typical).

The easiest way to reduce surface leakage is to use a guard ring around sensitive pins (or traces). The guard ring is biased at the same voltage as the sensitive pin. An example of this type of layout is shown in Figure 4-7.

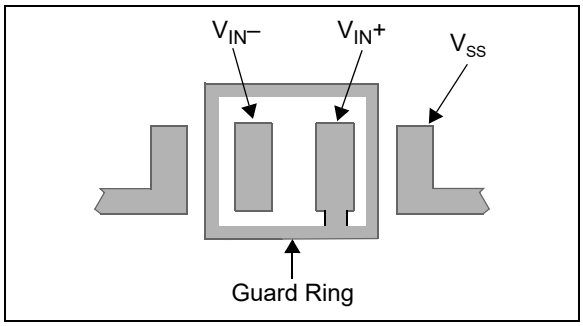

FIGURE 4-7: *Example Guard Ring Layout for Inverting Gain.*

1. Noninverting Gain and Unity-Gain Buffer:
   a) Connect the noninverting pin ($V_{IN}+$) to the input with a wire that does not touch the PCB surface.
   b) Connect the guard ring to the inverting input pin ($V_{IN}-$). This biases the guard ring to the Common-mode input voltage.
2. Inverting Gain and Transimpedance Amplifiers (convert current to voltage, such as photo detectors):
   a) Connect the guard ring to the noninverting input pin ($V_{IN}+$). This biases the guard ring to the same reference voltage as the op amp (e.g., $V_{DD}/2$ or ground).
   b) Connect the inverting pin ($V_{IN}-$) to the input with a wire that does not touch the PCB surface.

4.7 Application Circuits

4.7.1 MATCHING THE IMPEDANCE AT THE INPUTS

To minimize the effect of input bias current in an amplifier circuit (this is important for very high source impedance applications, such as pH meters and transimpedance amplifiers), the impedances at the inverting and noninverting inputs need to be matched. This is done by choosing the circuit resistor values so that the total resistance at each input is the same. Figure 4-8 shows a summing amplifier circuit.

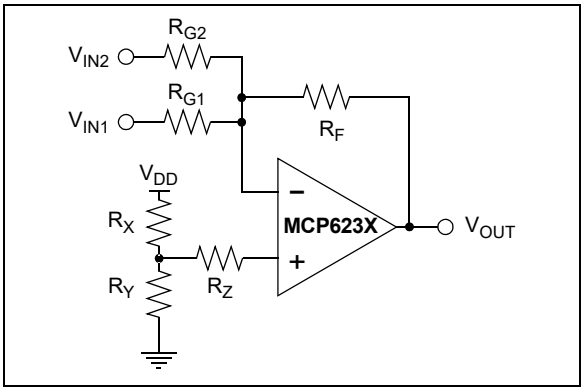

FIGURE 4-8: *Summing Amplifier Circuit.*

To match the inputs, set all voltage sources to ground and calculate the total resistance at the input nodes. In this summing amplifier circuit, the resistance at the inverting input is calculated by setting V_{IN1}, V_{IN2} and V_{OUT} to ground. In this case, R_{G1}, R_{G2} and R_F are in parallel. The total resistance at the inverting input is:

EQUATION 4-1:

$$R_{VIN-} = \frac{1}{\left(\frac{1}{R_{G1}} + \frac{1}{R_{G2}} + \frac{1}{R_F}\right)}$$

Where:

R_{VIN-} = Total Resistance at the Inverting Input

At the noninverting input, V_{DD} is the only voltage source. When V_{DD} is set to ground, both R_X and R_Y are in parallel. The total resistance at the noninverting input is:

EQUATION 4-2:

$$R_{VIN+} = \frac{1}{\left(\frac{1}{R_X} + \frac{1}{R_Y}\right)} + R_Z$$

Where:

R_{VIN+} = Total Resistance at the Inverting Input

Downloaded from Arrow.com.

To minimize output offset voltage and increase circuit accuracy, the resistor values need to meet the conditions:

EQUATION 4-3:

$$R_{VIN}+ = R_{VIN}-$$

4.7.2 COMPENSATING FOR THE PARASITIC CAPACITANCE

In analog circuit design, the PCB parasitic capacitance can compromise the circuit behavior; Figure 4-9 shows a typical scenario. If the input of an amplifier sees parasitic capacitance of several picofarad (C_{PARA}, which includes the Common-mode capacitance of 6 pF, typical), as well as large R_F and R_G, the frequency response of the circuit will include a zero. This parasitic zero introduces gain peaking and can cause circuit instability.

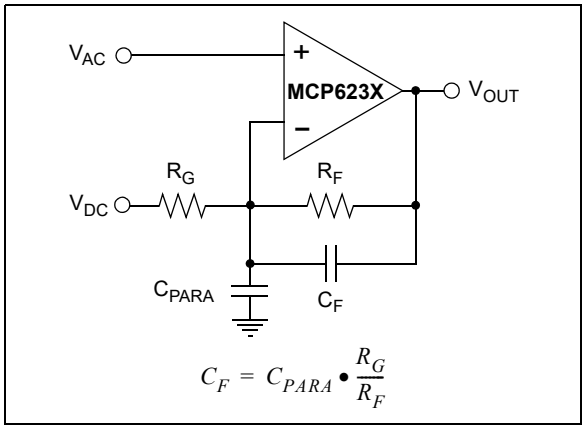

FIGURE 4-9: *Effect of Parasitic Capacitance at the Input.*

One solution is to use smaller resistor values to push the zero to a higher frequency. Another solution is to compensate by introducing a pole at the point at which the zero occurs. This can be done by adding C_F in parallel with the feedback resistor (R_F). C_F needs to be selected so that the ratio, C_{PARA}:C_F, is equal to the ratio of R_F:R_G.

© 2004-2020 Microchip Technology Inc.

Downloaded from Arrow.com.

5.0 DESIGN AIDS

Microchip provides the basic design tools needed for the MCP6231/1R/1U/2/4 family of op amps.

5.1 SPICE Macro Model

The latest SPICE macro model for the MCP6231/1R/1U/2/4 op amps is available on the Microchip website at www.microchip.com. This model is intended to be an initial design tool that works well in the op amp's linear region of operation over the temperature range. See the model file for information on its capabilities.

Bench testing is a very important part of any design and cannot be replaced with simulations. Also, simulation results using this macro model need to be validated by comparing them to the data sheet specifications and characteristic curves.

5.2 FilterLab® Software

Microchip's FilterLab® software is an innovative software tool that simplifies analog active filter (using op amps) design. Available at no cost from the Microchip website at www.microchip.com/filterlab, the FilterLab design tool provides full schematic diagrams of the filter circuit with component values. It also outputs the filter circuit in SPICE format, which can be used with the macro model to simulate actual filter performance.

5.3 Mindi™ Circuit Designer and Simulator

Microchip's Mindi™ Circuit Designer and Simulator aids in the design of various circuits useful for active filter, amplifier and power management applications. It is a free online circuit designer and simulator available from the Microchip website at www.microchip.com/mindi. This interactive circuit designer and simulator enables designers to quickly generate circuit diagrams, and simulate circuits. Circuits developed using the Mindi Circuit Designer and Simulator can be downloaded to a personal computer or workstation.

5.4 Microchip Advanced Part Selector (MAPS)

MAPS is a software tool that helps semiconductor professionals efficiently identify Microchip devices that fit a particular design requirement. Available at no cost from the Microchip website at www.microchip.com/maps, MAPS is an overall selection tool for Microchip's product portfolio that includes Analog, Memory, MCUs and DSCs. Using this tool you can define a filter to sort features for a parametric search of devices and export side-by-side technical comparison reports. Helpful links are also provided for data sheets, purchase and sampling of Microchip parts.

5.5 Analog Demonstration and Evaluation Boards

Microchip offers a broad spectrum of Analog Demonstration and Evaluation Boards that are designed to help you achieve faster time to market. For a complete listing of these boards and their corresponding user's guides and technical information, visit the Microchip website at:

www.microchip.com/analogtools

Two of our boards that are especially useful are:

- **P/N SOIC8EV:** *8-Pin SOIC/MSOP/TSSOP/DIP Evaluation Board*
- **P/N SOIC14EV:** *14-Pin SOIC/TSSOP/DIP Evaluation Board*

5.6 Application Notes

The following Microchip Application Notes are available on the Microchip website at www.microchip. com/appnotes and are recommended as supplemental reference resources.

- **ADN003:** *"Select the Right Operational Amplifier for your Filtering Circuits,"* DS21821
- **AN722:** *"Operational Amplifier Topologies and DC Specifications,"* DS00722
- **AN723:** *"Operational Amplifier AC Specifications and Applications,"* DS00723
- **AN884:** *"Driving Capacitive Loads With Op Amps,"* DS00884
- **AN990:** *"Analog Sensor Conditioning Circuits – An Overview,"* DS00990

These application notes and others are listed in the design guide:

- *"Signal Chain Design Guide,"* DS21825

Downloaded from Arrow.com.

NOTES:

© 2004-2020 Microchip Technology Inc.

Downloaded from Arrow.com.

6.0 PACKAGING INFORMATION

6.1 Package Marking Information

5-Lead SC70 **(MCP6231U Only)**

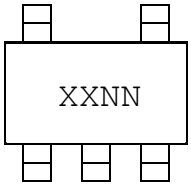

Example:

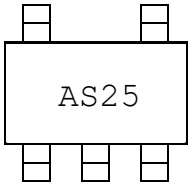

5-Lead SOT-23

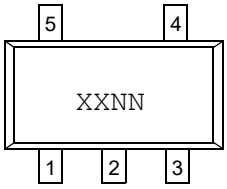

Device	Code
MCP6231	BJNN
MCP6231R	BKNN
MCP6231U	BLNN

Note: Applies to 5-Lead SOT-23.

Example:

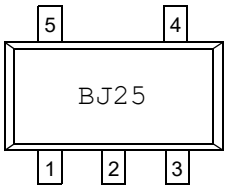

8-Lead DFN (2 x 3 mm) (**MCP6231**)

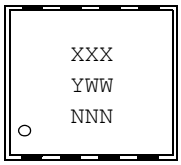

Example:

8-Lead TDFN (2 x 3 mm) (**MCP6232**)

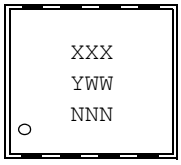

Example:

8-Lead MSOP

Example:

Legend:	XX...X	Customer-specific information
	Y	Year code (last digit of calendar year)
	YY	Year code (last 2 digits of calendar year)
	WW	Week code (week of January 1 is week ‘01’)
	NNN	Alphanumeric traceability code
	(e3)	Pb-free JEDEC designator for Matte Tin (Sn)
	*	This package is Pb-free. The Pb-free JEDEC designator ((e3)) can be found on the outer packaging for this package.

Note: In the event the full Microchip part number cannot be marked on one line, it will be carried over to the next line, thus limiting the number of available characters for customer-specific information.

Downloaded from Arrow.com.

Package Marking Information (Continued)

8-Lead PDIP (300 mil)

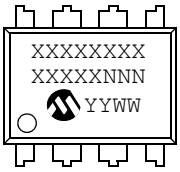

Example:

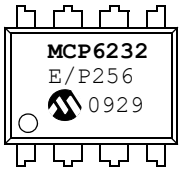

OR

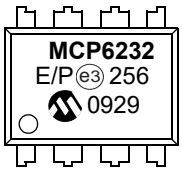

8-Lead SOIC (150 mil)

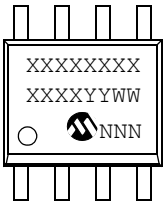

Example:

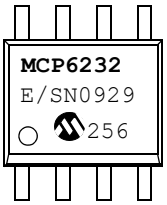

OR

14-Lead PDIP (300 mil) **(MCP6234)**

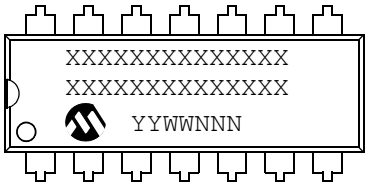

Example:

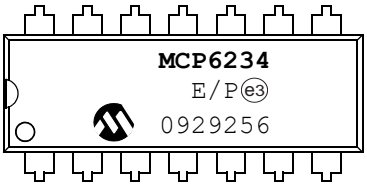

14-Lead SOIC (150 mil) **(MCP6234)**

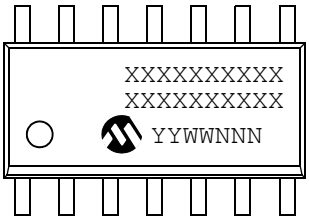

Example:

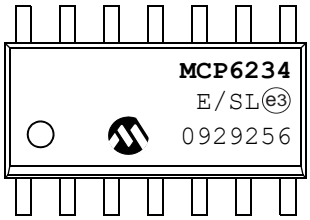

14-Lead TSSOP **(MCP6234)**

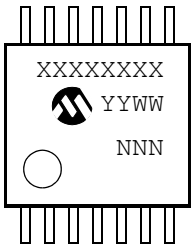

Example:

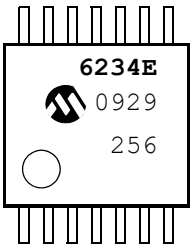

© 2004-2020 Microchip Technology Inc.

Downloaded from Arrow.com.

5-Lead Plastic Small Outline Transistor (LT) [SC70]

Note: For the most current package drawings, please see the Microchip Packaging Specification located at http://www.microchip.com/packaging

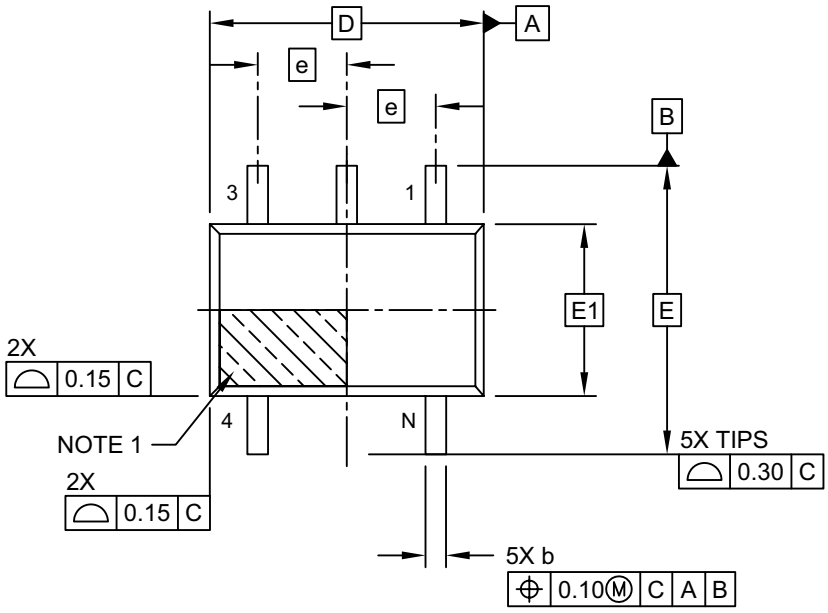

TOP VIEW

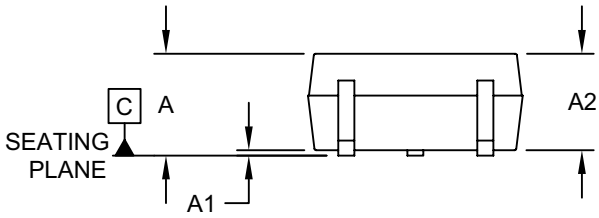

SIDE VIEW

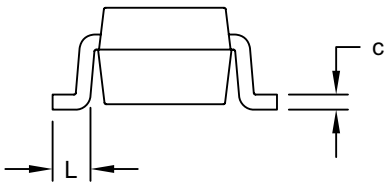

END VIEW

Microchip Technology Drawing C04-061-LT Rev E Sheet 1 of 2

Downloaded from Arrow.com.

5-Lead Plastic Small Outline Transistor (LT) [SC70]

Note: For the most current package drawings, please see the Microchip Packaging Specification located at http://www.microchip.com/packaging

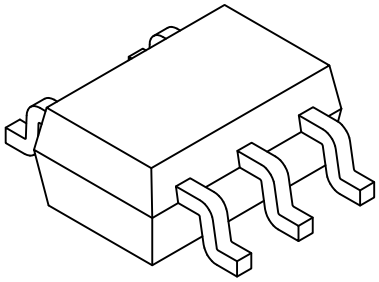

Units		MILLIMETERS		
Dimension Limits		MIN	NOM	MAX
Number of Pins	N	5		
Pitch	e	0.65 BSC		
Overall Height	A	0.80	-	1.10
Standoff	A1	0.00	-	0.10
Molded Package Thickness	A2	0.80	-	1.00
Overall Length	D	2.00 BSC		
Overall Width	E	2.10 BSC		
Molded Package Width	E1	1.25 BSC		
Terminal Width	b	0.15	-	0.40
Terminal Length	L	0.10	0.20	0.46
Lead Thickness	c	0.08	-	0.26

Notes:

1. Pin 1 visual index feature may vary, but must be located within the hatched area.
2. Dimensions D and E1 do not include mold flash or protrusions. Mold flash or protrusions shall not exceed 0.15mm per side.
3. Dimensioning and tolerancing per ASME Y14.5M

   BSC: Basic Dimension. Theoretically exact value shown without tolerances.

   REF: Reference Dimension, usually without tolerance, for information purposes only.

Microchip Technology Drawing C04-061-LT Rev E Sheet 2 of 2

© 2004-2020 Microchip Technology Inc.

Downloaded from Arrow.com.

5-Lead Plastic Small Outline Transistor (LT) [SC70]

Note: For the most current package drawings, please see the Microchip Packaging Specification located at http://www.microchip.com/packaging

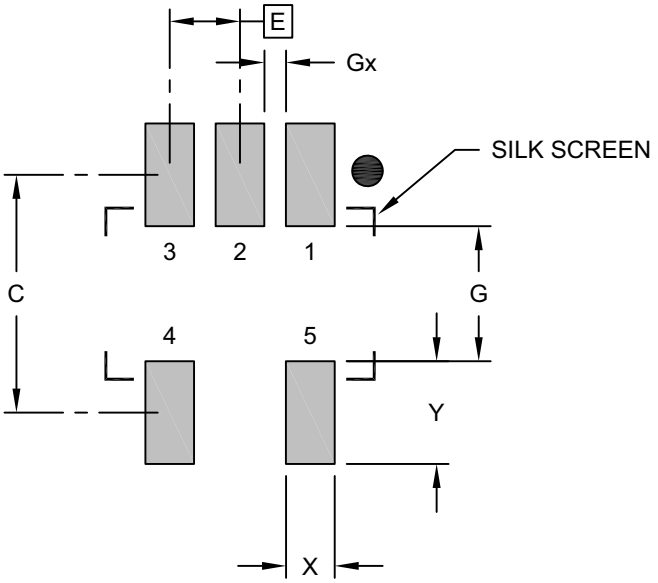

RECOMMENDED LAND PATTERN

Units		MILLIMETERS		
Dimension Limits		MIN	NOM	MAX
Contact Pitch	E		0.65 BSC	
Contact Pad Spacing	C		2.20	
Contact Pad Width	X			0.45
Contact Pad Length	Y			0.95
Distance Between Pads	G	1.25		
Distance Between Pads	Gx	0.20		

Notes:

1. Dimensioning and tolerancing per ASME Y14.5M
   BSC: Basic Dimension. Theoretically exact value shown without tolerances.

Microchip Technology Drawing No. C04-2061-LT Rev E

Downloaded from Arrow.com.

5-Lead Plastic Small Outline Transistor (OT) [SOT23]

Note: For the most current package drawings, please see the Microchip Packaging Specification located at http://www.microchip.com/packaging

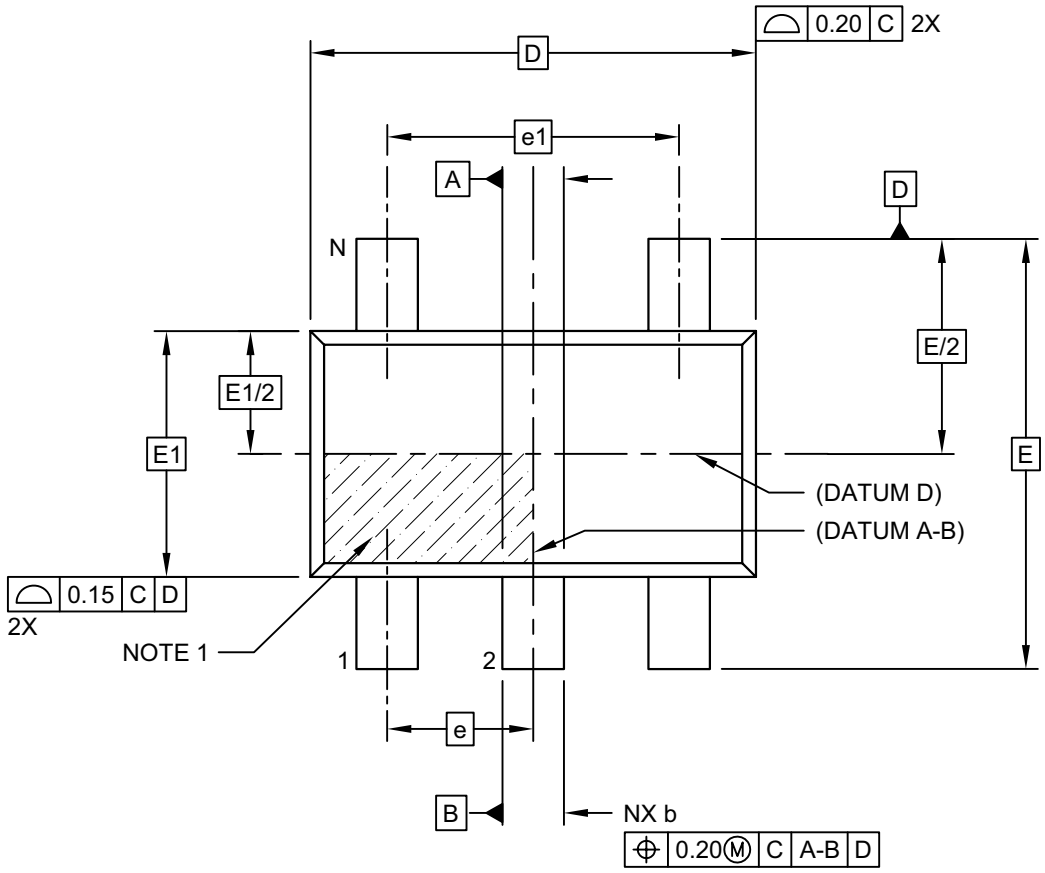

TOP VIEW

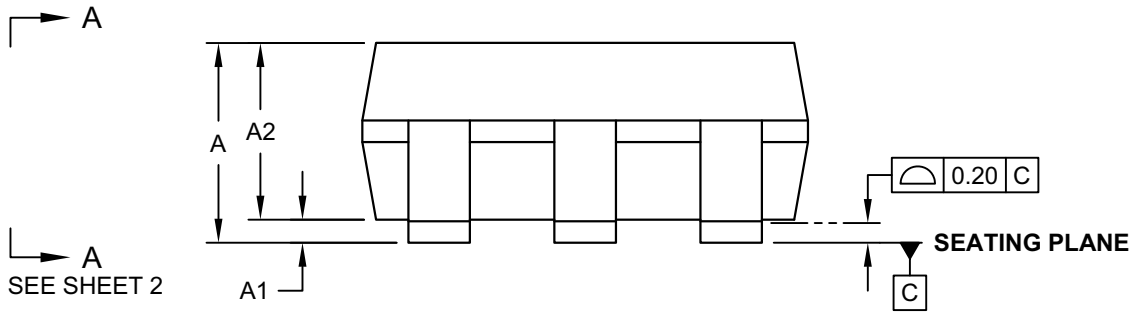

SIDE VIEW

Microchip Technology Drawing C04-091-OT Rev F Sheet 1 of 2

© 2004-2020 Microchip Technology Inc.

Downloaded from Arrow.com.

5-Lead Plastic Small Outline Transistor (OT) [SOT23]

Note: For the most current package drawings, please see the Microchip Packaging Specification located at http://www.microchip.com/packaging

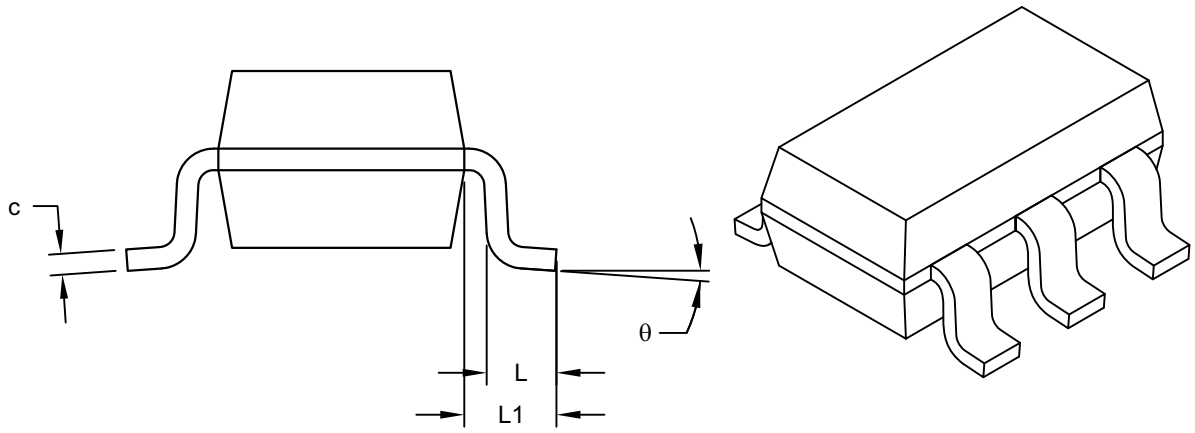

VIEW A-A
SHEET 1

Units		MILLIMETERS		
Dimension Limits		MIN	NOM	MAX
Number of Pins	N	5		
Pitch	e	0.95 BSC		
Outside lead pitch	e1	1.90 BSC		
Overall Height	A	0.90	-	1.45
Molded Package Thickness	A2	0.89	-	1.30
Standoff	A1	-	-	0.15
Overall Width	E	2.80 BSC		
Molded Package Width	E1	1.60 BSC		
Overall Length	D	2.90 BSC		
Foot Length	L	0.30	-	0.60
Footprint	L1	0.60 REF		
Foot Angle	ϕ	0°	-	10°
Lead Thickness	c	0.08	-	0.26
Lead Width	b	0.20	-	0.51

Notes:
1. Dimensions D and E1 do not include mold flash or protrusions. Mold flash or protrusions shall not exceed 0.25mm per side.
2. Dimensioning and tolerancing per ASME Y14.5M
   BSC: Basic Dimension. Theoretically exact value shown without tolerances.
   REF: Reference Dimension, usually without tolerance, for information purposes only.

Microchip Technology Drawing C04-091-OT Rev F Sheet 2 of 2

Downloaded from Arrow.com.

5-Lead Plastic Small Outline Transistor (OT) [SOT23]

Note: For the most current package drawings, please see the Microchip Packaging Specification located at http://www.microchip.com/packaging

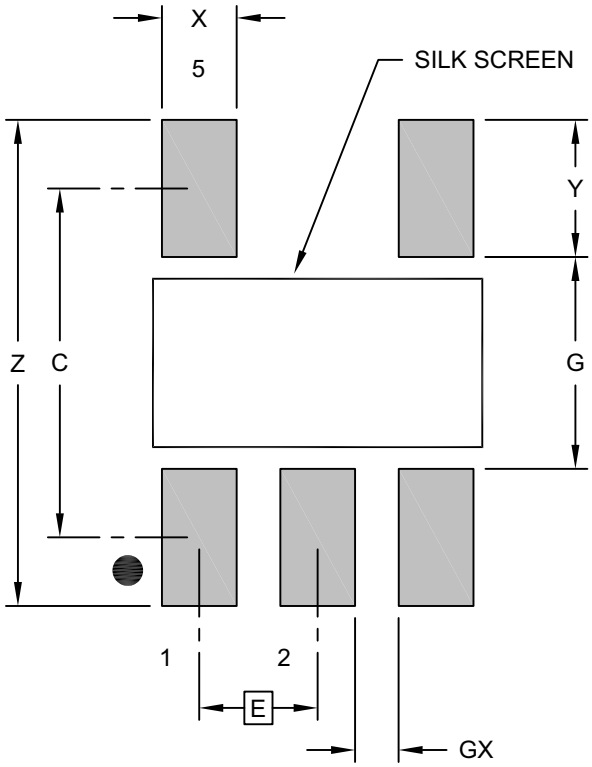

RECOMMENDED LAND PATTERN

Units		MILLIMETERS		
Dimension Limits		MIN	NOM	MAX
Contact Pitch	E		0.95 BSC	
Contact Pad Spacing	C		2.80	
Contact Pad Width (X5)	X			0.60
Contact Pad Length (X5)	Y			1.10
Distance Between Pads	G	1.70		
Distance Between Pads	GX	0.35		
Overall Width	Z			3.90

Notes:

1. Dimensioning and tolerancing per ASME Y14.5M
   BSC: Basic Dimension. Theoretically exact value shown without tolerances.

Microchip Technology Drawing No. C04-2091-OT Rev F

© 2004-2020 Microchip Technology Inc.

Downloaded from Arrow.com.

8-Lead Plastic Dual Flat, No Lead Package (MC) – 2x3x0.9 mm Body [DFN]

Note: For the most current package drawings, please see the Microchip Packaging Specification located at http://www.microchip.com/packaging

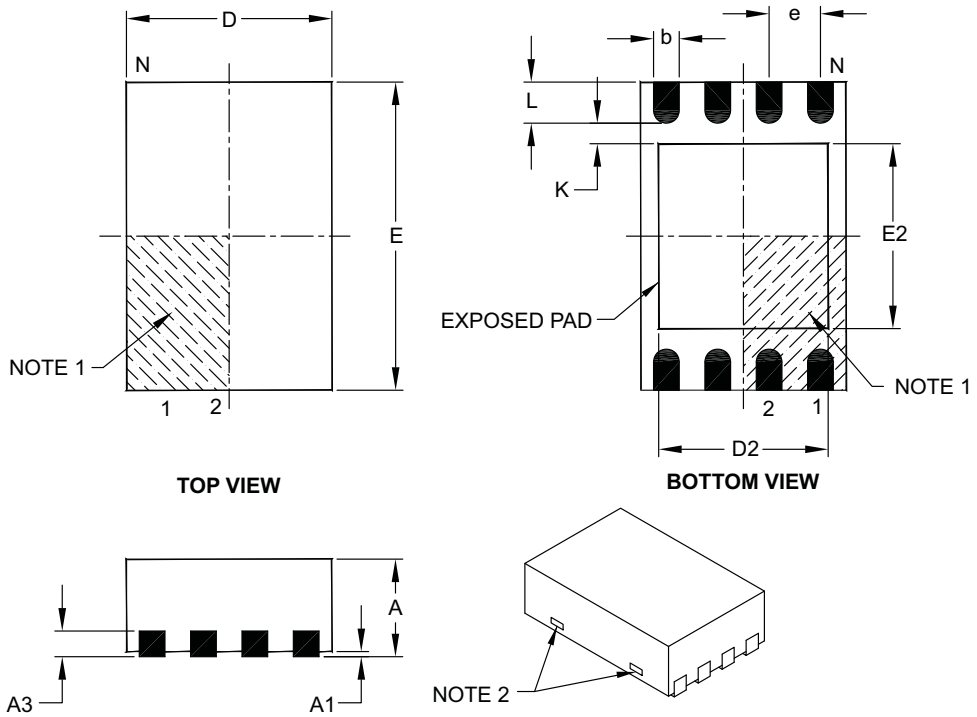

Units		MILLIMETERS		
Dimension Limits		MIN	NOM	MAX
Number of Pins	N	8		
Pitch	e	0.50 BSC		
Overall Height	A	0.80	0.90	1.00
Standoff	A1	0.00	0.02	0.05
Contact Thickness	A3	0.20 REF		
Overall Length	D	2.00 BSC		
Overall Width	E	3.00 BSC		
Exposed Pad Length	D2	1.30	–	1.55
Exposed Pad Width	E2	1.50	–	1.75
Contact Width	b	0.20	0.25	0.30
Contact Length	L	0.30	0.40	0.50
Contact-to-Exposed Pad	K	0.20	–	–

Notes:

1. Pin 1 visual index feature may vary, but must be located within the hatched area.
2. Package may have one or more exposed tie bars at ends.
3. Package is saw singulated.
4. Dimensioning and tolerancing per ASME Y14.5M.
   BSC: Basic Dimension. Theoretically exact value shown without tolerances.
   REF: Reference Dimension, usually without tolerance, for information purposes only.

Microchip Technology Drawing C04-123C

Downloaded from Arrow.com.

8-Lead Plastic Dual Flat, No Lead Package (MC) - 2x3x0.9mm Body [DFN]

Note: For the most current package drawings, please see the Microchip Packaging Specification located at http://www.microchip.com/packaging

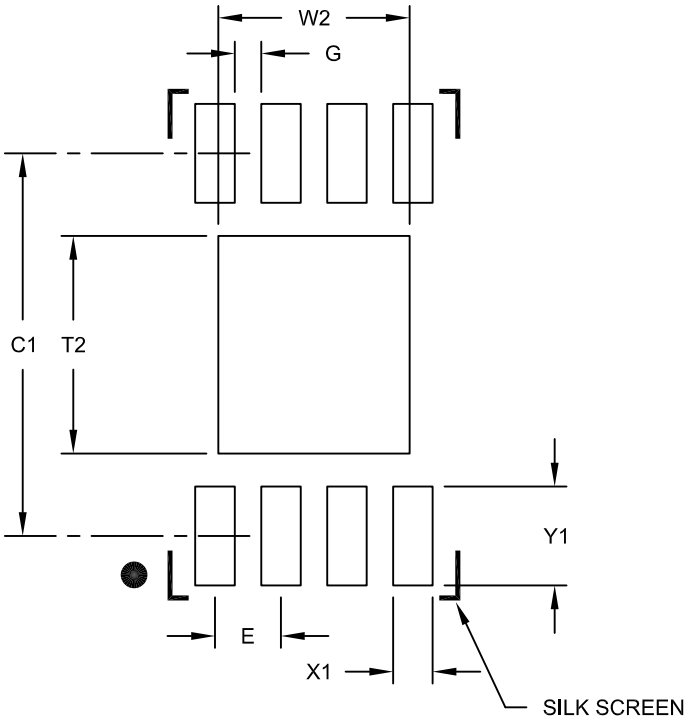

RECOMMENDED LAND PATTERN

Units		MILLIMETERS		
Dimension Limits		MIN	NOM	MAX
Contact Pitch	E		0.50 BSC	
Optional Center Pad Width	W2			1.45
Optional Center Pad Length	T2			1.75
Contact Pad Spacing	C1		2.90	
Contact Pad Width (X8)	X1			0.30
Contact Pad Length (X8)	Y1			0.75
Distance Between Pads	G	0.20		

Notes:

1. Dimensioning and tolerancing per ASME Y14.5M

BSC: Basic Dimension. Theoretically exact value shown without tolerances.

Microchip Technology Drawing No. C04-2123B

© 2004-2020 Microchip Technology Inc.

Downloaded from Arrow.com.

8-Lead Plastic Dual Flat, No Lead Package (MN) – 2x3x0.8 mm Body [TDFN] With 1.4x1.3 mm Exposed Pad (JEDEC Package type WDFN)

Note:	For the most current package drawings, please see the Microchip Packaging Specification located at http://www.microchip.com/packaging

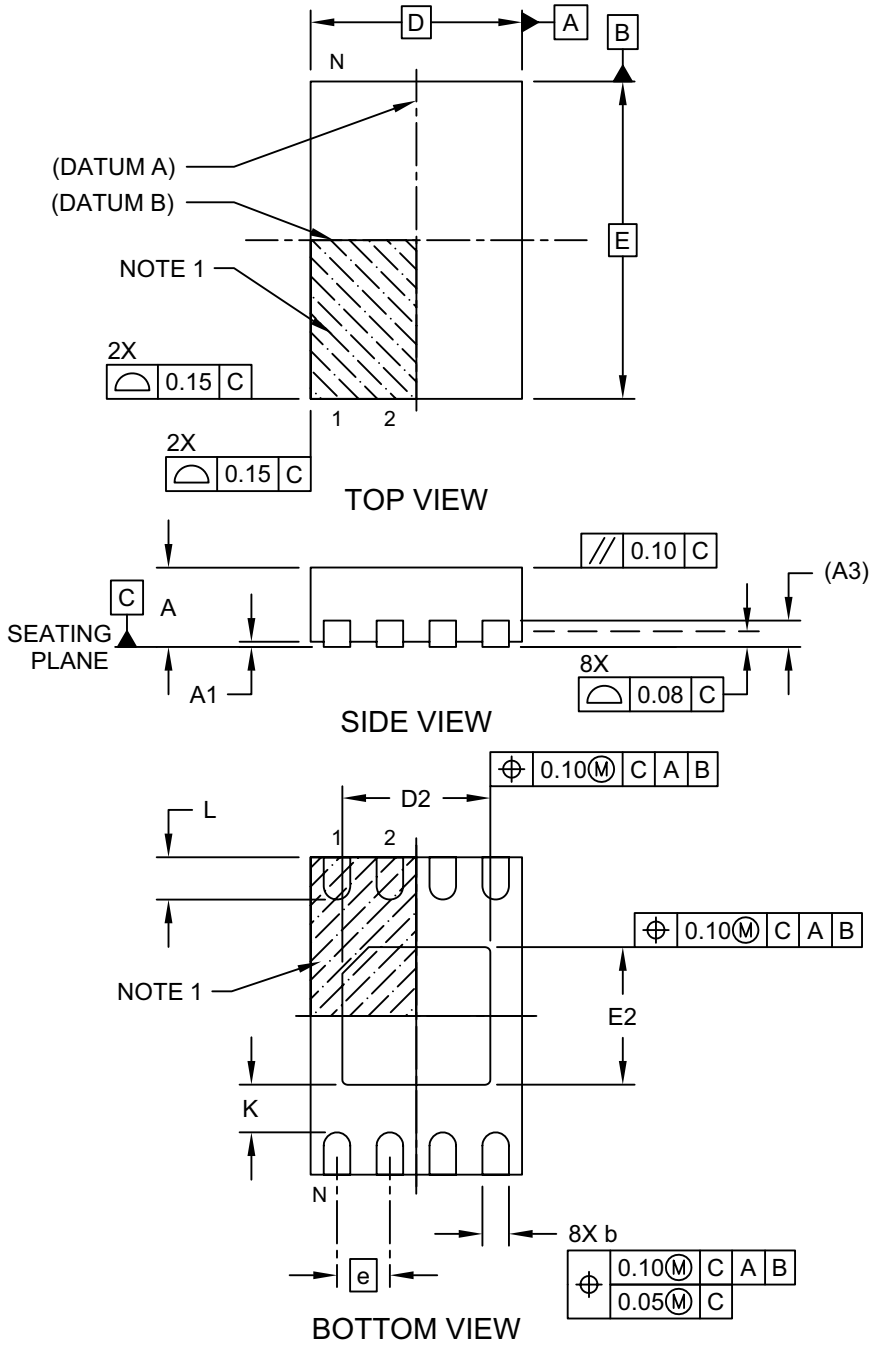

Microchip Technology Drawing No. C04-129-MN Rev E Sheet 1 of 2

Downloaded from Arrow.com.

8-Lead Plastic Dual Flat, No Lead Package (MN) – 2x3x0.8 mm Body [TDFN] With 1.4x1.3 mm Exposed Pad (JEDEC Package type WDFN)

Note: For the most current package drawings, please see the Microchip Packaging Specification located at http://www.microchip.com/packaging

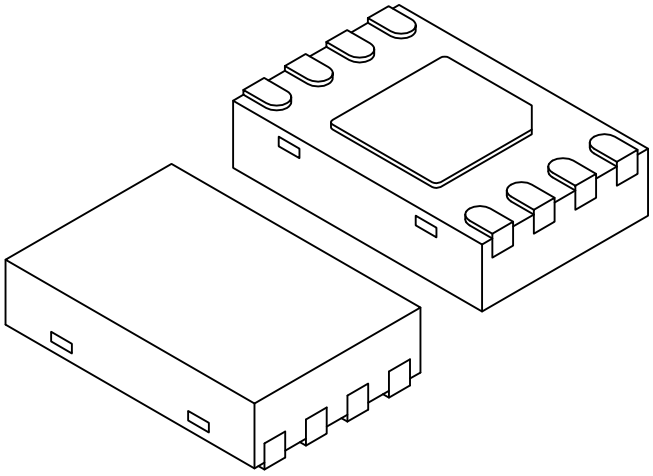

Units		MILLIMETERS		
Dimension Limits		MIN	NOM	MAX
Number of Pins	N	8		
Pitch	e	0.50 BSC		
Overall Height	A	0.70	0.75	0.80
Standoff	A1	0.00	0.02	0.05
Contact Thickness	A3	0.20 REF		
Overall Length	D	2.00 BSC		
Overall Width	E	3.00 BSC		
Exposed Pad Length	D2	1.35	1.40	1.45
Exposed Pad Width	E2	1.25	1.30	1.35
Contact Width	b	0.20	0.25	0.30
Contact Length	L	0.25	0.30	0.45
Contact-to-Exposed Pad	K	0.20	-	-

Notes:

1. Pin 1 visual index feature may vary, but must be located within the hatched area.
2. Package may have one or more exposed tie bars at ends.
3. Package is saw singulated
4. Dimensioning and tolerancing per ASME Y14.5M

   BSC: Basic Dimension. Theoretically exact value shown without tolerances.

   REF: Reference Dimension, usually without tolerance, for information purposes only.

Microchip Technology Drawing No. C04-129-MN Rev E Sheet 2 of 2

© 2004-2020 Microchip Technology Inc.

Downloaded from Arrow.com.

8-Lead Plastic Dual Flat, No Lead Package (MN) – 2x3x0.8 mm Body [TDFN] With 1.4x1.3 mm Exposed Pad (JEDEC Package type WDFN)

Note: For the most current package drawings, please see the Microchip Packaging Specification located at http://www.microchip.com/packaging

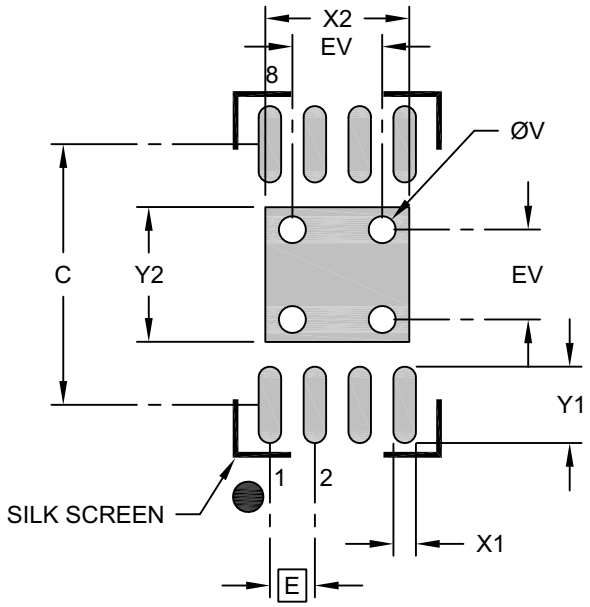

RECOMMENDED LAND PATTERN

Units		MILLIMETERS		
Dimension Limits		MIN	NOM	MAX
Contact Pitch	E		0.50 BSC	
Optional Center Pad Width	X2			1.60
Optional Center Pad Length	Y2			1.50
Contact Pad Spacing	C		2.90	
Contact Pad Width (X8)	X1			0.25
Contact Pad Length (X8)	Y1			0.85
Thermal Via Diameter	V		0.30	
Thermal Via Pitch	EV		1.00	

Notes:

1. Dimensioning and tolerancing per ASME Y14.5M
   BSC: Basic Dimension. Theoretically exact value shown without tolerances.
2. For best soldering results, thermal vias, if used, should be filled or tented to avoid solder loss during reflow process

Microchip Technology Drawing No. C04-129-MN Rev. B

Downloaded from Arrow.com.

8-Lead Plastic Micro Small Outline Package (MS) [MSOP]

Note: For the most current package drawings, please see the Microchip Packaging Specification located at http://www.microchip.com/packaging

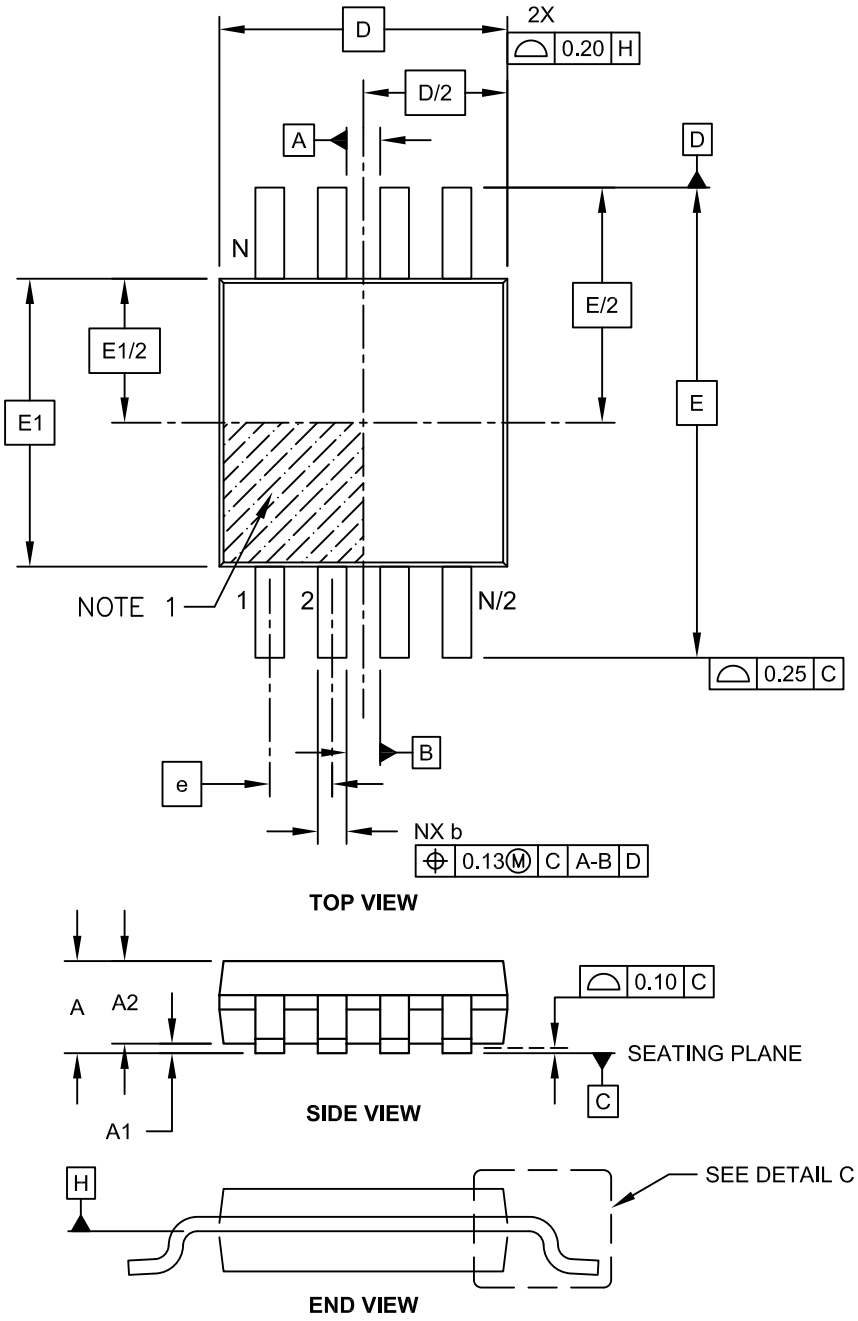

Microchip Technology Drawing C04-111C Sheet 1 of 2

© 2004-2020 Microchip Technology Inc.

Downloaded from Arrow.com.

8-Lead Plastic Micro Small Outline Package (MS) [MSOP]

Note: For the most current package drawings, please see the Microchip Packaging Specification located at http://www.microchip.com/packaging

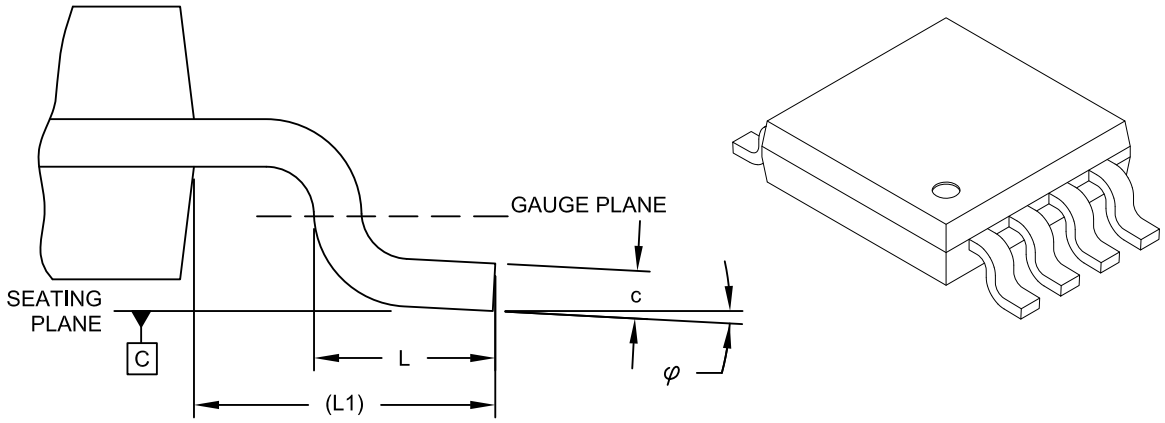

DETAIL C

Units		MILLIMETERS		
Dimension Limits		MIN	NOM	MAX
Number of Pins	N		8	
Pitch	e		0.65 BSC	
Overall Height	A	-	-	1.10
Molded Package Thickness	A2	0.75	0.85	0.95
Standoff	A1	0.00	-	0.15
Overall Width	E		4.90 BSC	
Molded Package Width	E1		3.00 BSC	
Overall Length	D		3.00 BSC	
Foot Length	L	0.40	0.60	0.80
Footprint	L1		0.95 REF	
Foot Angle	φ	0°	-	8°
Lead Thickness	c	0.08	-	0.23
Lead Width	b	0.22	-	0.40

Notes:

1. Pin 1 visual index feature may vary, but must be located within the hatched area.
2. Dimensions D and E1 do not include mold flash or protrusions. Mold flash or protrusions shall not exceed 0.15mm per side.
3. Dimensioning and tolerancing per ASME Y14.5M.
   BSC: Basic Dimension. Theoretically exact value shown without tolerances.
   REF: Reference Dimension, usually without tolerance, for information purposes only.

Microchip Technology Drawing C04-111C Sheet 2 of 2

Downloaded from Arrow.com.

8-Lead Plastic Micro Small Outline Package (MS) [MSOP]

Note: For the most current package drawings, please see the Microchip Packaging Specification located at http://www.microchip.com/packaging

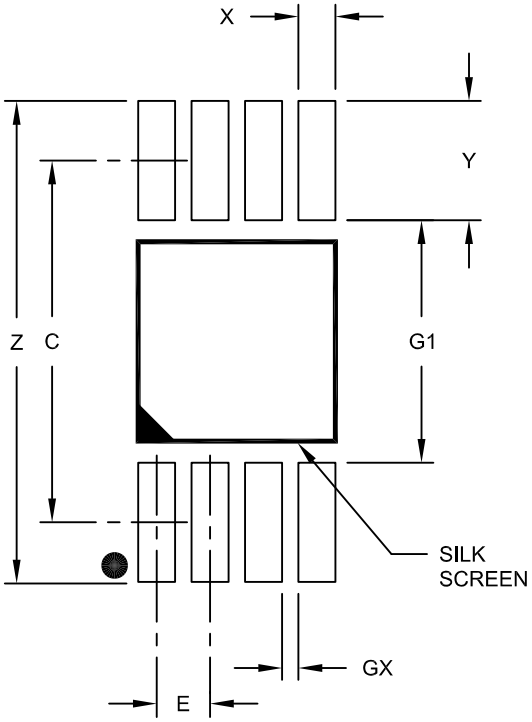

RECOMMENDED LAND PATTERN

Units		MILLIMETERS		
Dimension Limits		MIN	NOM	MAX
Contact Pitch	E		0.65 BSC	
Contact Pad Spacing	C		4.40	
Overall Width	Z			5.85
Contact Pad Width (X8)	X1			0.45
Contact Pad Length (X8)	Y1			1.45
Distance Between Pads	G1	2.95		
Distance Between Pads	GX	0.20		

Notes:

1. Dimensioning and tolerancing per ASME Y14.5M
   BSC: Basic Dimension. Theoretically exact value shown without tolerances.

Microchip Technology Drawing No. C04-2111A

© 2004-2020 Microchip Technology Inc.

Downloaded from Arrow.com.

8-Lead Plastic Dual In-Line (P) - 300 mil Body [PDIP]

Note: For the most current package drawings, please see the Microchip Packaging Specification located at http://www.microchip.com/packaging

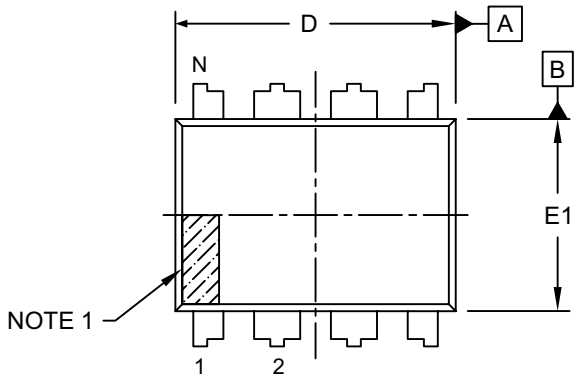

TOP VIEW

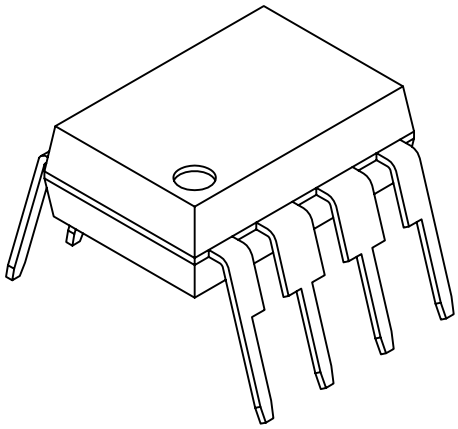

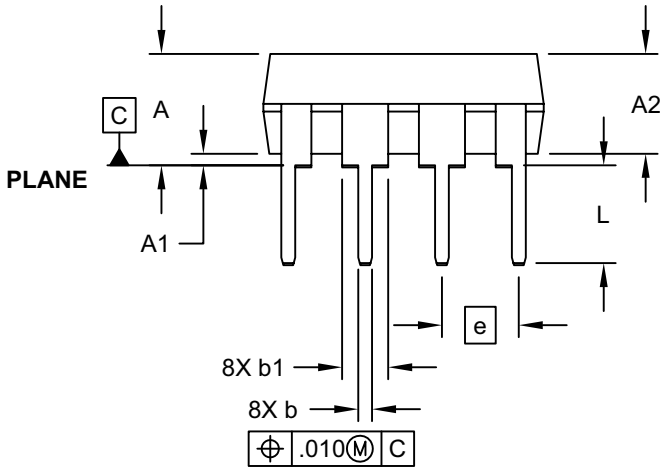

SIDE VIEW

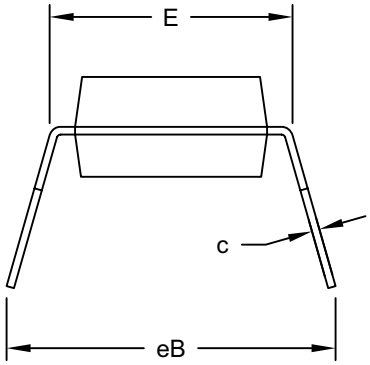

END VIEW

Microchip Technology Drawing No. C04-018-P Rev E Sheet 1 of 2

Downloaded from Arrow.com.

8-Lead Plastic Dual In-Line (P) - 300 mil Body [PDIP]

Note: For the most current package drawings, please see the Microchip Packaging Specification located at http://www.microchip.com/packaging

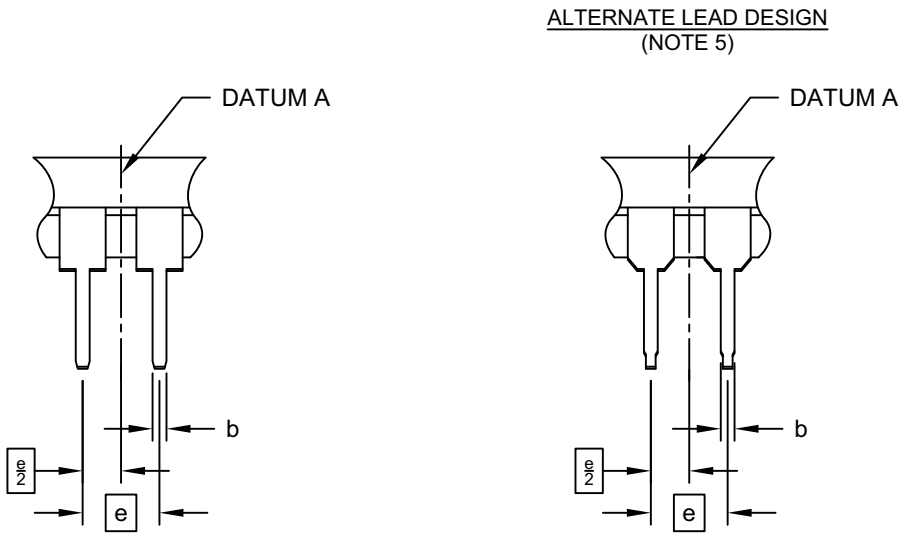

Units		INCHES		
Dimension Limits		MIN	NOM	MAX
Number of Pins	N	8		
Pitch	e	.100 BSC		
Top to Seating Plane	A	-	-	.210
Molded Package Thickness	A2	.115	.130	.195
Base to Seating Plane	A1	.015	-	-
Shoulder to Shoulder Width	E	.290	.310	.325
Molded Package Width	E1	.240	.250	.280
Overall Length	D	.348	.365	.400
Tip to Seating Plane	L	.115	.130	.150
Lead Thickness	c	.008	.010	.015
Upper Lead Width	b1	.040	.060	.070
Lower Lead Width	b	.014	.018	.022
Overall Row Spacing §	eB	-	-	.430

Notes:

1. Pin 1 visual index feature may vary, but must be located within the hatched area.
2. § Significant Characteristic
3. Dimensions D and E1 do not include mold flash or protrusions. Mold flash or protrusions shall not exceed .010" per side.
4. Dimensioning and tolerancing per ASME Y14.5M
   BSC: Basic Dimension. Theoretically exact value shown without tolerances.
5. Lead design above seating plane may vary, based on assembly vendor.

Microchip Technology Drawing No. C04-018-P Rev E Sheet 2 of 2

© 2004-2020 Microchip Technology Inc.

Downloaded from Arrow.com.

8-Lead Plastic Small Outline (SN) - Narrow, 3.90 mm (.150 In.) Body [SOIC]

Note: For the most current package drawings, please see the Microchip Packaging Specification located at http://www.microchip.com/packaging

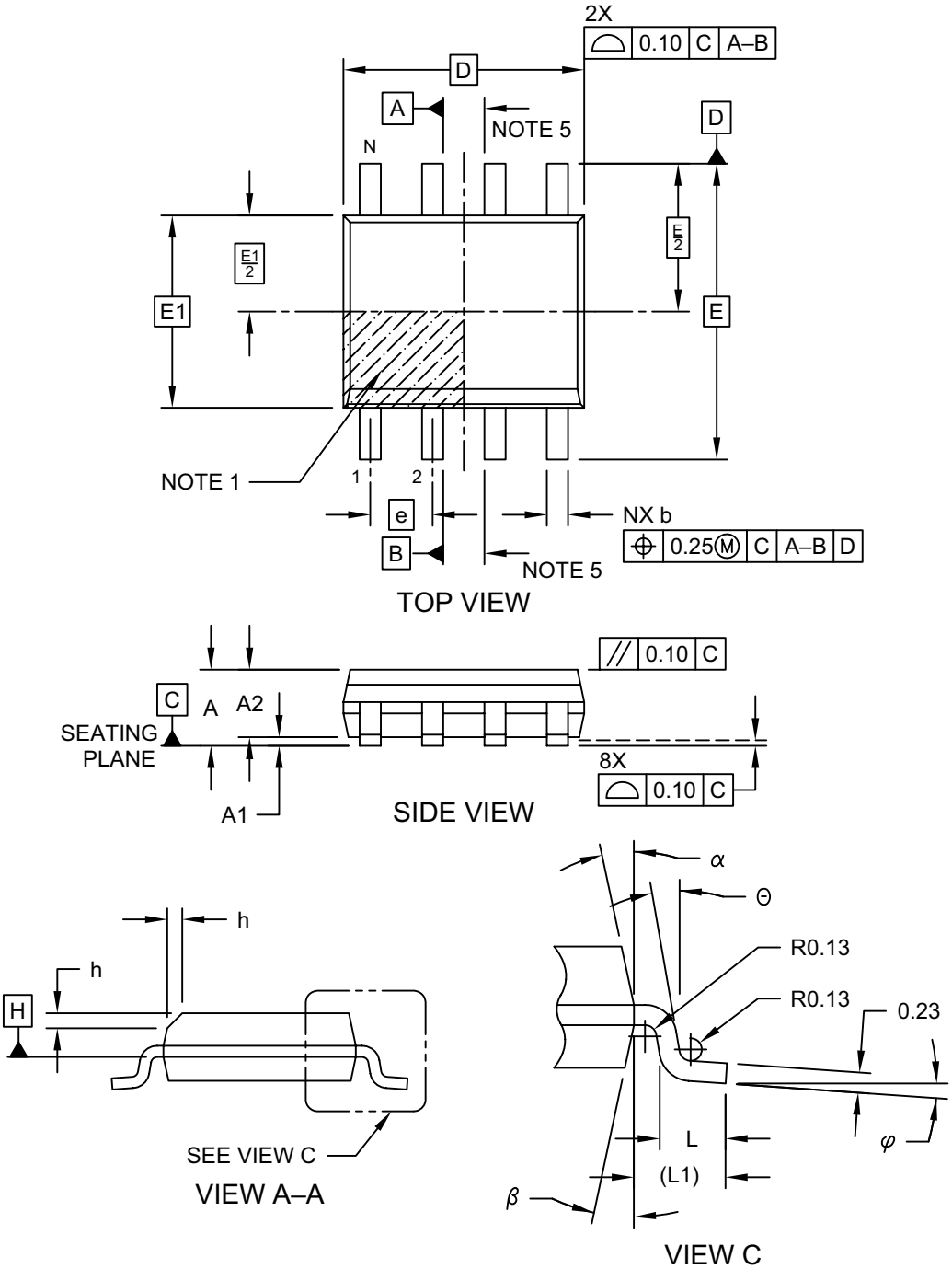

Microchip Technology Drawing No. C04-057-SN Rev E Sheet 1 of 2

Downloaded from Arrow.com.

8-Lead Plastic Small Outline (SN) - Narrow, 3.90 mm (.150 In.) Body [SOIC]

Note: For the most current package drawings, please see the Microchip Packaging Specification located at http://www.microchip.com/packaging

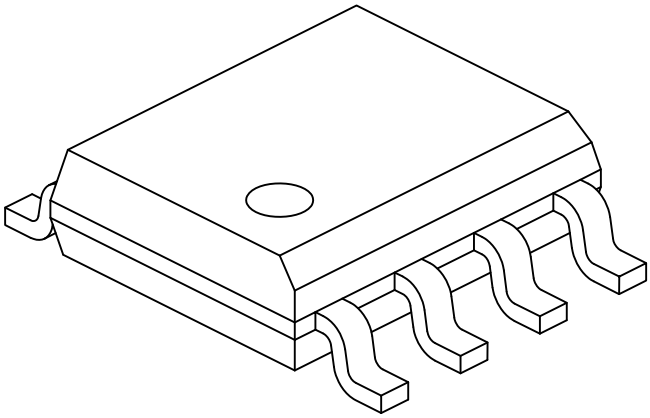

Units		MILLIMETERS		
Dimension Limits		MIN	NOM	MAX
Number of Pins	N	8		
Pitch	e	1.27 BSC		
Overall Height	A	-	-	1.75
Molded Package Thickness	A2	1.25	-	-
Standoff §	A1	0.10	-	0.25
Overall Width	E	6.00 BSC		
Molded Package Width	E1	3.90 BSC		
Overall Length	D	4.90 BSC		
Chamfer (Optional)	h	0.25	-	0.50
Foot Length	L	0.40	-	1.27
Footprint	L1	1.04 REF		
Foot Angle	φ	0°	-	8°
Lead Thickness	c	0.17	-	0.25
Lead Width	b	0.31	-	0.51
Mold Draft Angle Top	α	5°	-	15°
Mold Draft Angle Bottom	β	5°	-	15°

Notes:

1. Pin 1 visual index feature may vary, but must be located within the hatched area.
2. § Significant Characteristic
3. Dimensions D and E1 do not include mold flash or protrusions. Mold flash or protrusions shall not exceed 0.15mm per side.
4. Dimensioning and tolerancing per ASME Y14.5M
   BSC: Basic Dimension. Theoretically exact value shown without tolerances.
   REF: Reference Dimension, usually without tolerance, for information purposes only.
5. Datums A & B to be determined at Datum H.

Microchip Technology Drawing No. C04-057-SN Rev E Sheet 2 of 2

© 2004-2020 Microchip Technology Inc.

Downloaded from Arrow.com.

8-Lead Plastic Small Outline (SN) - Narrow, 3.90 mm Body [SOIC]

Note: For the most current package drawings, please see the Microchip Packaging Specification located at http://www.microchip.com/packaging

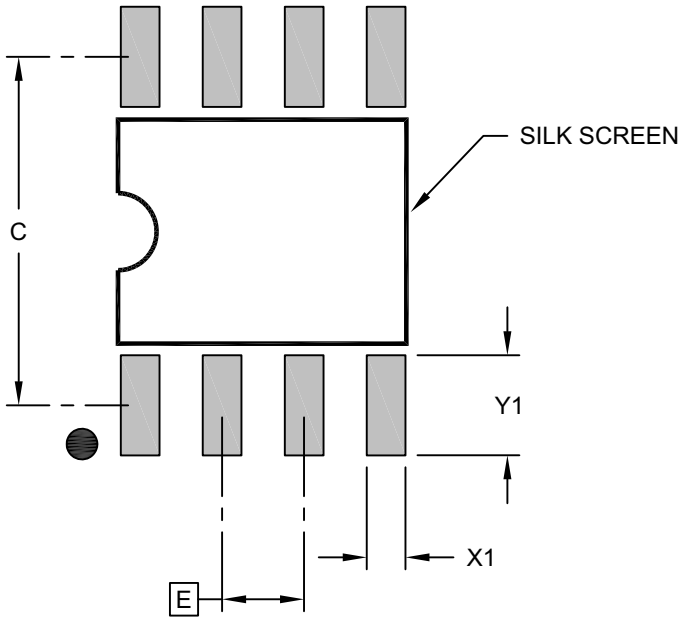

RECOMMENDED LAND PATTERN

Units		MILLIMETERS		
Dimension Limits		MIN	NOM	MAX
Contact Pitch	E	1.27 BSC		
Contact Pad Spacing	C		5.40	
Contact Pad Width (X8)	X1			0.60
Contact Pad Length (X8)	Y1			1.55

Notes:

1. Dimensioning and tolerancing per ASME Y14.5M
   BSC: Basic Dimension. Theoretically exact value shown without tolerances.

Microchip Technology Drawing C04-2057-SN Rev E

Downloaded from Arrow.com.

14-Lead Plastic Dual In-Line (P) – 300 mil Body [PDIP]

Note: For the most current package drawings, please see the Microchip Packaging Specification located at http://www.microchip.com/packaging

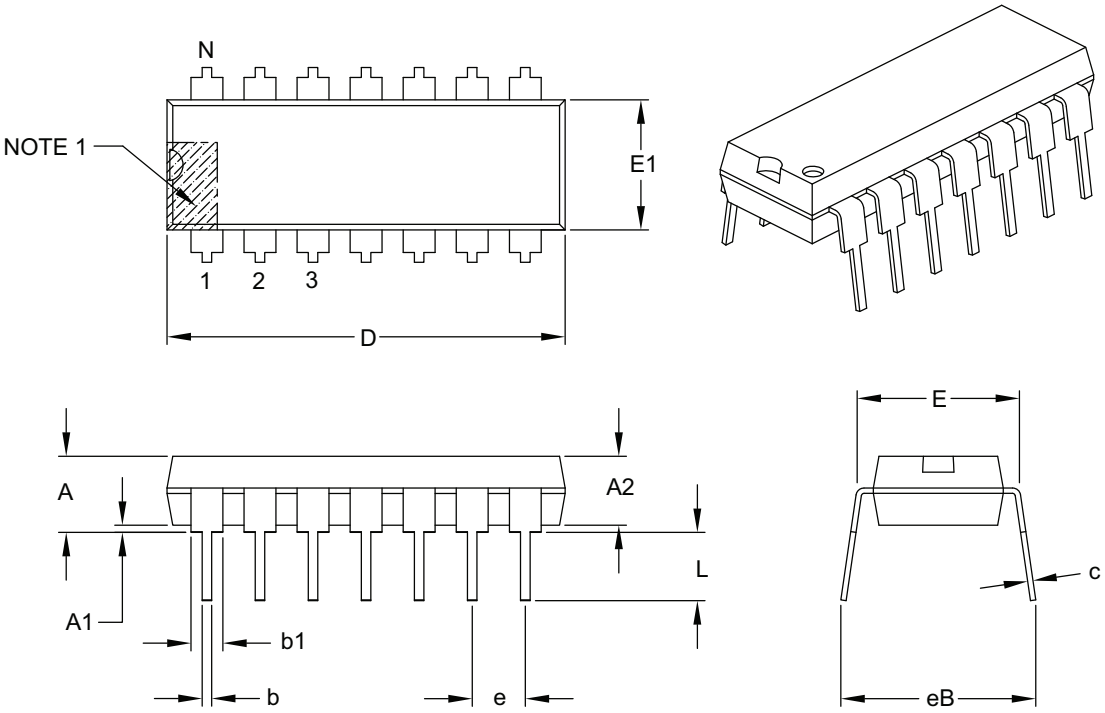

Units		INCHES		
Dimension Limits		MIN	NOM	MAX
Number of Pins	N	14		
Pitch	e	.100 BSC		
Top to Seating Plane	A	–	–	.210
Molded Package Thickness	A2	.115	.130	.195
Base to Seating Plane	A1	.015	–	–
Shoulder to Shoulder Width	E	.290	.310	.325
Molded Package Width	E1	.240	.250	.280
Overall Length	D	.735	.750	.775
Tip to Seating Plane	L	.115	.130	.150
Lead Thickness	c	.008	.010	.015
Upper Lead Width	b1	.045	.060	.070
Lower Lead Width	b	.014	.018	.022
Overall Row Spacing §	eB	–	–	.430

Notes:

1. Pin 1 visual index feature may vary, but must be located with the hatched area.
2. § Significant Characteristic.
3. Dimensions D and E1 do not include mold flash or protrusions. Mold flash or protrusions shall not exceed .010" per side.
4. Dimensioning and tolerancing per ASME Y14.5M.
   BSC: Basic Dimension. Theoretically exact value shown without tolerances.

Microchip Technology Drawing C04-005B

© 2004-2020 Microchip Technology Inc.

Downloaded from Arrow.com.

14-Lead Plastic Small Outline (SL) - Narrow, 3.90 mm Body [SOIC]

Note: For the most current package drawings, please see the Microchip Packaging Specification located at http://www.microchip.com/packaging

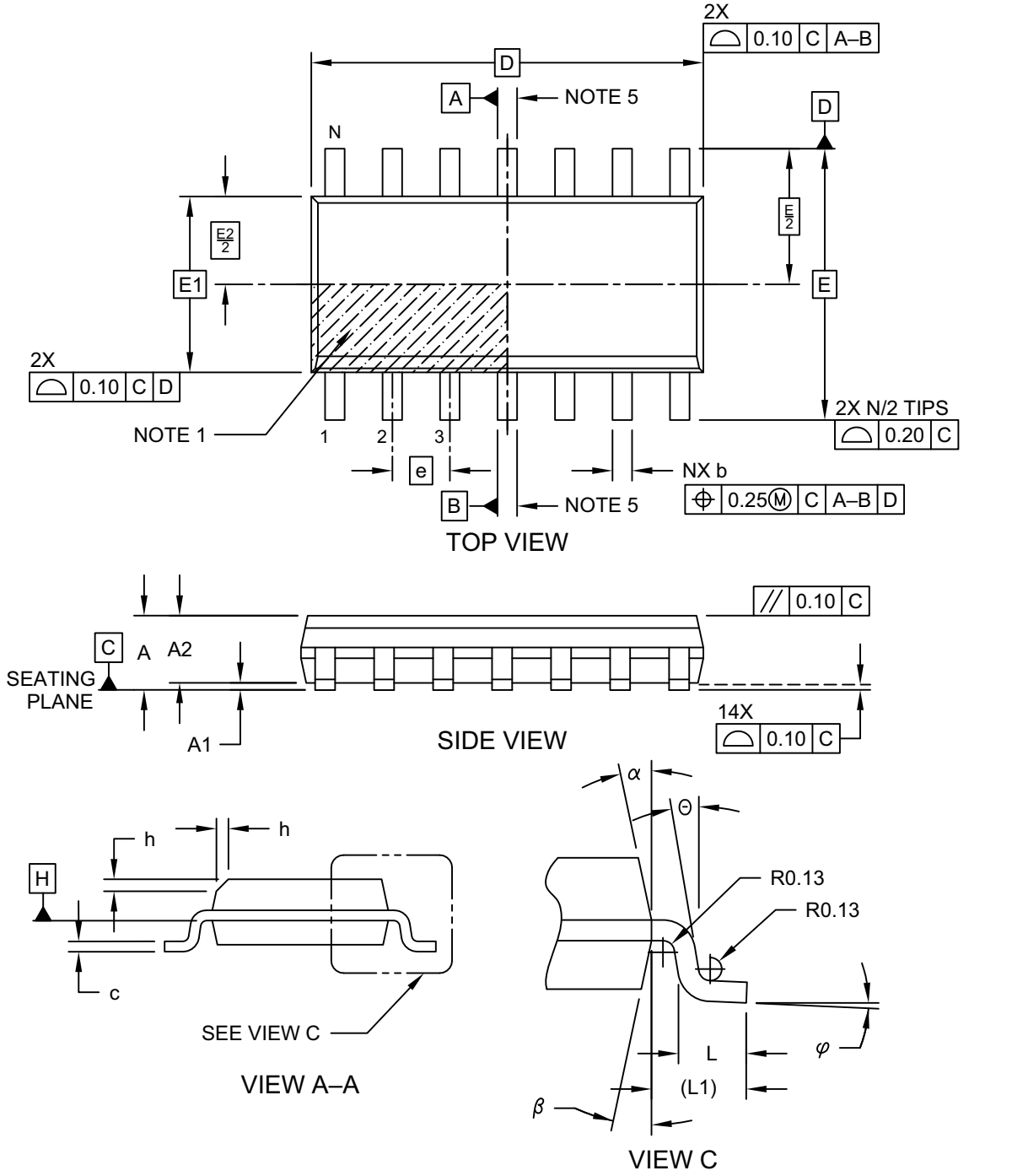

Microchip Technology Drawing No. C04-065-SL Rev D Sheet 1 of 2

Downloaded from Arrow.com.

14-Lead Plastic Small Outline (SL) - Narrow, 3.90 mm Body [SOIC]

Note: For the most current package drawings, please see the Microchip Packaging Specification located at http://www.microchip.com/packaging

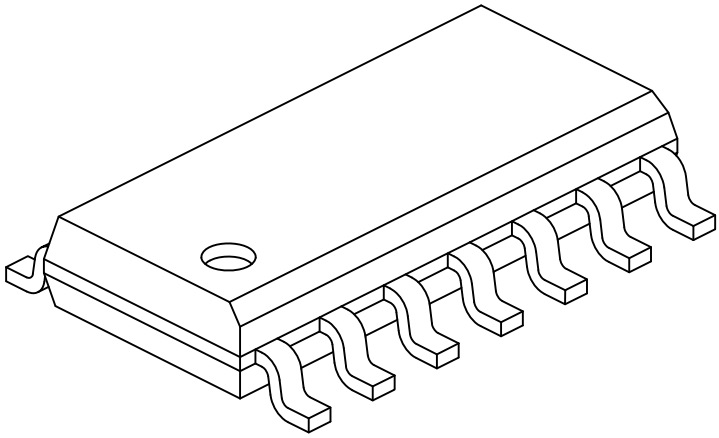

Units		MILLIMETERS		
Dimension Limits		MIN	NOM	MAX
Number of Pins	N	14		
Pitch	e	1.27 BSC		
Overall Height	A	-	-	1.75
Molded Package Thickness	A2	1.25	-	-
Standoff §	A1	0.10	-	0.25
Overall Width	E	6.00 BSC		
Molded Package Width	E1	3.90 BSC		
Overall Length	D	8.65 BSC		
Chamfer (Optional)	h	0.25	-	0.50
Foot Length	L	0.40	-	1.27
Footprint	L1	1.04 REF		
Lead Angle	Θ	0°	-	-
Foot Angle	φ	0°	-	8°
Lead Thickness	c	0.10	-	0.25
Lead Width	b	0.31	-	0.51
Mold Draft Angle Top	α	5°	-	15°
Mold Draft Angle Bottom	β	5°	-	15°

Notes:

1. Pin 1 visual index feature may vary, but must be located within the hatched area.
2. § Significant Characteristic
3. Dimension D does not include mold flash, protrusions or gate burrs, which shall not exceed 0.15 mm per end. Dimension E1 does not include interlead flash or protrusion, which shall not exceed 0.25 mm per side.
4. Dimensioning and tolerancing per ASME Y14.5M
   BSC: Basic Dimension. Theoretically exact value shown without tolerances.
   REF: Reference Dimension, usually without tolerance, for information purposes only.
5. Datums A & B to be determined at Datum H.

Microchip Technology Drawing No. C04-065-SL Rev D Sheet 2 of 2

© 2004-2020 Microchip Technology Inc.

Downloaded from Arrow.com.

14-Lead Plastic Small Outline (SL) - Narrow, 3.90 mm Body [SOIC]

Note: For the most current package drawings, please see the Microchip Packaging Specification located at http://www.microchip.com/packaging

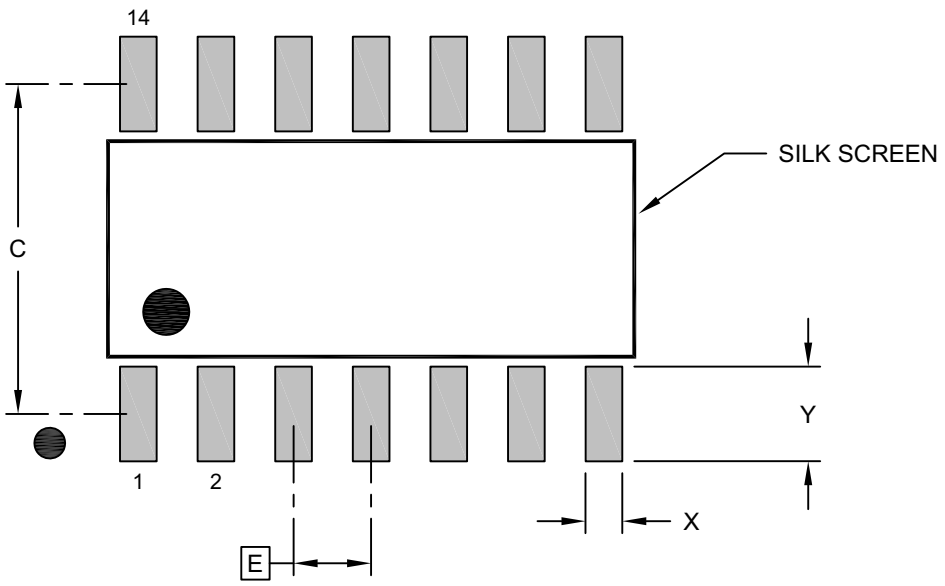

RECOMMENDED LAND PATTERN

Units		MILLIMETERS		
Dimension Limits		MIN	NOM	MAX
Contact Pitch	E		1.27 BSC	
Contact Pad Spacing	C		5.40	
Contact Pad Width (X14)	X			0.60
Contact Pad Length (X14)	Y			1.55

Notes:

1. Dimensioning and tolerancing per ASME Y14.5M
   BSC: Basic Dimension. Theoretically exact value shown without tolerances.

Microchip Technology Drawing No. C04-2065-SL Rev D

Downloaded from Arrow.com.

14-Lead Plastic Thin Shrink Small Outline (ST) - 4.4 mm Body [TSSOP]

Note: For the most current package drawings, please see the Microchip Packaging Specification located at http://www.microchip.com/packaging

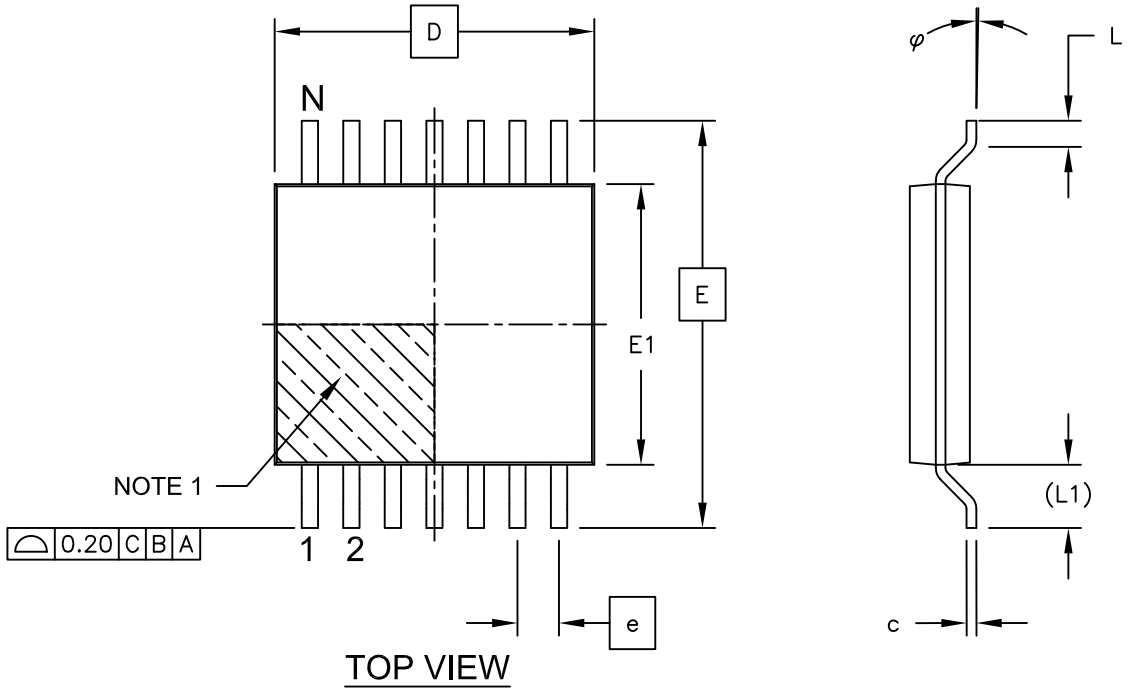

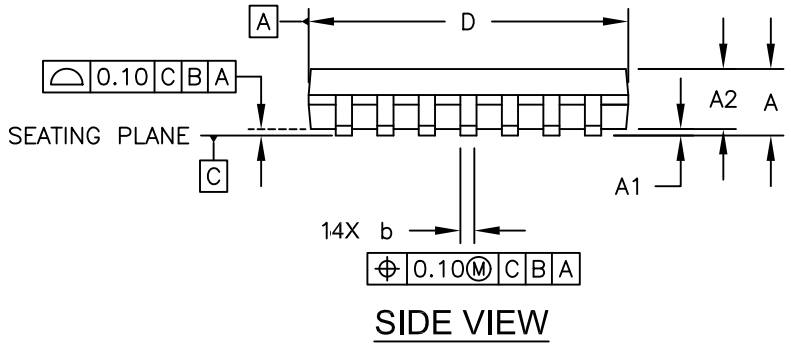

Microchip Technology Drawing C04-087C Sheet 1 of 2

© 2004-2020 Microchip Technology Inc.

Downloaded from Arrow.com.

14-Lead Plastic Thin Shrink Small Outline (ST) - 4.4 mm Body [TSSOP]

Note: For the most current package drawings, please see the Microchip Packaging Specification located at http://www.microchip.com/packaging

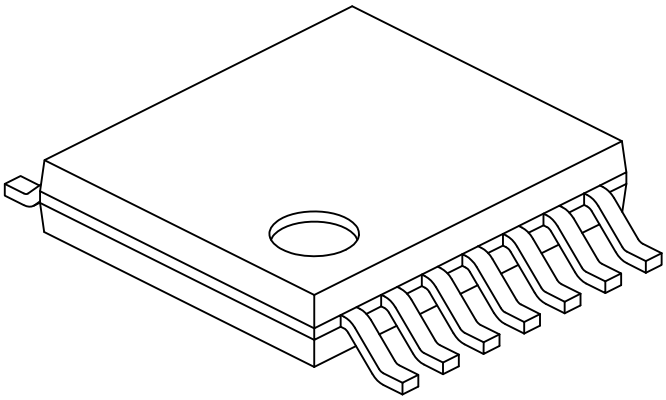

Units		MILLIMETERS		
Dimension Limits		MIN	NOM	MAX
Number of Pins	N	14		
Pitch	e	0.65 BSC		
Overall Height	A	-	-	1.20
Molded Package Thickness	A2	0.80	1.00	1.05
Standoff	A1	0.05	-	0.15
Overall Width	E	6.40 BSC		
Molded Package Width	E1	4.30	4.40	4.50
Molded Package Length	D	4.90	5.00	5.10
Foot Length	L	0.45	0.60	0.75
Footprint	(L1)	1.00 REF		
Foot Angle	φ	0°	-	8°
Lead Thickness	c	0.09	-	0.20
Lead Width	b	0.19	-	0.30

Notes:

1. Pin 1 visual index feature may vary, but must be located within the hatched area.
2. Dimensions D and E1 do not include mold flash or protrusions. Mold flash or protrusions shall not exceed 0.15mm per side.
3. Dimensioning and tolerancing per ASME Y14.5M

   BSC: Basic Dimension. Theoretically exact value shown without tolerances.

   REF: Reference Dimension, usually without tolerance, for information purposes only.

Microchip Technology Drawing No. C04-087C Sheet 2 of 2

Downloaded from Arrow.com.

14-Lead Plastic Thin Shrink Small Outline (ST) - 4.4 mm Body [TSSOP]

Note: For the most current package drawings, please see the Microchip Packaging Specification located at http://www.microchip.com/packaging

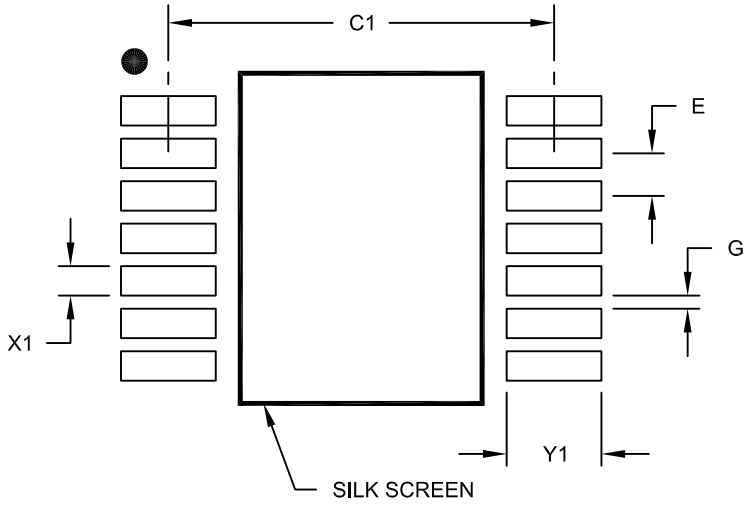

RECOMMENDED LAND PATTERN

Units		MILLIMETERS		
Dimension Limits		MIN	NOM	MAX
Contact Pitch	E	0.65 BSC		
Contact Pad Spacing	C1		5.90	
Contact Pad Width (X14)	X1			0.45
Contact Pad Length (X14)	Y1			1.45
Distance Between Pads	G	0.20		

Notes:

1. Dimensioning and tolerancing per ASME Y14.5M
   BSC: Basic Dimension. Theoretically exact value shown without tolerances.

Microchip Technology Drawing No. C04-2087A

© 2004-2020 Microchip Technology Inc.

Downloaded from Arrow.com.

APPENDIX A: REVISION HISTORY

Revision G (March 2020)

The following is the list of modifications:

1. Updated package drawings for the SC-70 package.

Revision F (October 2019)

The following is the list of modifications:

1. Updated **Section 6.0 "Packaging Information"**.

Revision E (August 2009)

The following is the list of modifications:

1. Added the 2x3 TDFN package for MCP6232.
2. Updated the 2x3 DFN package information for MCP6231.
3. Updated the **"Temperature Characteristics"** table.
4. Updated **Section 3.0 "Pin Descriptions"**.
5. Updated the Package Outline Drawings in **Section 6.0 "Packaging Information"**.
6. Updated the Product Identification System section.

Revision D (May 2008)

The following is the list of modifications:

1. Changed Heading "Available Tools" to "Design Aids".
2. **Design Aids:** Name change for Mindi Simulator Tool.
3. **Package Types:** Added DFN to MCP6231 Device.
4. **Absolute Maximum Ratings:** Numerous changes in this section.
5. Updated notes to **Section 1.0 "Electrical Characteristics"**.
6. Added Test Circuits to **Section 1.0 "Electrical Characteristics"**.
7. Corrected Figure 2-7.
8. Added Figure 2-19.
9. Numerous changes to **Section 3.0 "Pin Descriptions"**.
10. Added **Section 4.1.1 "Phase Reversal"**, **Section 4.1.2 "Input Voltage and Current Limits"**, and **Section 4.1.3 "Normal Operation"**.
11. Replaced **Section 5.0 "Design Aids"** with additional information.
12. Updated **Section 6.0 "Packaging Information"** with updated Package Outline Drawings.

Revision C (March 2005)

The following is the list of modifications:

1. Added the MCP6234 quad op amp.
2. Corrected plots in **Section 2.0 "Typical Performance Curves"**.
3. Added **Section 3.0 "Pin Descriptions"**.
4. Added new SC-70 package markings. Added PDIP-14, SOIC-14, and TSSOP-14 packages and corrected package marking information (**Section 6.0 "Packaging Information"**).
5. Added **Appendix A: "Revision History"**.

Revision B (August 2004)

- Undocumented changes.

Revision A (March 2004)

- Original Release of this Document.

Downloaded from Arrow.com.

NOTES:

© 2004-2020 Microchip Technology Inc.

Downloaded from Arrow.com.

PRODUCT IDENTIFICATION SYSTEM

To order or obtain information, e.g., on pricing or delivery, refer to the factory or the listed sales office.

PART NO.	X	-X	/XX
Device	Tape and Reel and/or Alternate Pinout	Temperature Range	Package

Device:	MCP6231:	Single Op Amp (MSOP, PDIP, SOIC)
	MCP6231T:	Single Op Amp (Tape and Reel) (MSOP, SOIC, SOT-23)
	MCP6231RT:	Single Op Amp (Tape and Reel) (SOT-23)
	MCP6231UT:	Single Op Amp (Tape and Reel) (SC70, SOT-23, TDFN)
	MCP6232:	Dual Op Amp
	MCP6232T:	Dual Op Amp (Tape and Reel) (MSOP, SOIC)
	MCP6234:	Quad Op Amp
	MCP6234T:	Quad Op Amp (Tape and Reel) (TSSOP, SOIC)
Temperature Range:	E =	-40°C to +125°C
Package:	LT =	Plastic Package (SC70), 5-Lead (MCP6231U only)
	MC =	Plastic Dual Flat No Lead (DFN) 2x3 mm, 8-Lead (MCP6231 only)
	MN =	Plastic Dual Flat No Lead (TDFN) 2x3 mm, 8-Lead (MCP6232 only)
	MS =	Plastic Micro Small Outline (MSOP), 8-Lead
	P =	Plastic DIP (300 mil Body), 8-Lead, 14-Lead
	OT =	Plastic Small Outline Transistor (SOT-23), 5-Lead (MCP6231, MCP6231R, MCP6231U)
	SN =	Plastic SOIC (150 mil Body), 8-Lead
	SL =	Plastic SOIC (3.90 mm), 14-Lead
	ST =	Plastic TSSOP (4.4 mm Body), 14-Lead

Examples:

a)	MCP6231-E/MC:	Extended Temperature, 8LD DFN package
b)	MCP6231-E/MS:	Extended Temperature, 8LD MSOP package
c)	MCP6231UT-E/LT:	Tape and Reel, Extended Temperature, 5LD SC70 package
d)	MCP6231-E/P:	Extended Temperature, 8LD PDIP package
e)	MCP6231RT-E/OT:	Tape and Reel, Extended Temperature, 5LD SOT-23 package
f)	MCP6231UT-E/OT:	Tape and Reel, Extended Temperature, 5LD SOT-23 package
g)	MCP6231-E/SN:	Extended Temperature, 8LD SOIC package
a)	MCP6232-E/SN:	Extended Temperature, 8LD SOIC package
b)	MCP6232-E/MS:	Extended Temperature, 8LD MSOP package
c)	MCP6232-E/P:	Extended Temperature, 8LD PDIP package
d)	MCP6232T-E/SN:	Tape and Reel, Extended Temperature, 8LD SOIC package
e)	MCP6232T-E/MNY:	Tape and Reel, Extended Temperature, 8LD TDFN package
a)	MCP6234-E/P:	Extended Temperature, 14LD PDIP package
b)	MCP6234-E/SL:	Extended Temperature, 14LD SOIC package
c)	MCP6234-E/ST:	Extended Temperature, 14LD TSSOP package
d)	MCP6234T-E/SL:	Tape and Reel, Extended Temperature, 14LD SOIC package
e)	MCP6234T-E/ST:	Tape and Reel, Extended Temperature, 14LD TSSOP package

Downloaded from Arrow.com.

NOTES:

© 2004-2020 Microchip Technology Inc.

Downloaded from Arrow.com.

Note the following details of the code protection feature on Microchip devices:

- Microchip products meet the specification contained in their particular Microchip Data Sheet.
- Microchip believes that its family of products is one of the most secure families of its kind on the market today, when used in the intended manner and under normal conditions.
- There are dishonest and possibly illegal methods used to breach the code protection feature. All of these methods, to our knowledge, require using the Microchip products in a manner outside the operating specifications contained in Microchip's Data Sheets. Most likely, the person doing so is engaged in theft of intellectual property.
- Microchip is willing to work with the customer who is concerned about the integrity of their code.
- Neither Microchip nor any other semiconductor manufacturer can guarantee the security of their code. Code protection does not mean that we are guaranteeing the product as "unbreakable."

Code protection is constantly evolving. We at Microchip are committed to continuously improving the code protection features of our products. Attempts to break Microchip's code protection feature may be a violation of the Digital Millennium Copyright Act. If such acts allow unauthorized access to your software or other copyrighted work, you may have a right to sue for relief under that Act.

Information contained in this publication regarding device applications and the like is provided only for your convenience and may be superseded by updates. It is your responsibility to ensure that your application meets with your specifications. MICROCHIP MAKES NO REPRESENTATIONS OR WARRANTIES OF ANY KIND WHETHER EXPRESS OR IMPLIED, WRITTEN OR ORAL, STATUTORY OR OTHERWISE, RELATED TO THE INFORMATION, INCLUDING BUT NOT LIMITED TO ITS CONDITION, QUALITY, PERFORMANCE, MERCHANTABILITY OR FITNESS FOR PURPOSE**.** Microchip disclaims all liability arising from this information and its use. Use of Microchip devices in life support and/or safety applications is entirely at the buyer's risk, and the buyer agrees to defend, indemnify and hold harmless Microchip from any and all damages, claims, suits, or expenses resulting from such use. No licenses are conveyed, implicitly or otherwise, under any Microchip intellectual property rights unless otherwise stated.

For information regarding Microchip's Quality Management Systems, please visit www.microchip.com/quality.

Trademarks

The Microchip name and logo, the Microchip logo, Adaptec, AnyRate, AVR, AVR logo, AVR Freaks, BesTime, BitCloud, chipKIT, chipKIT logo, CryptoMemory, CryptoRF, dsPIC, FlashFlex, flexPWR, HELDO, IGLOO, JukeBlox, KeeLoq, Kleer, LANCheck, LinkMD, maXStylus, maXTouch, MediaLB, megaAVR, Microsemi, Microsemi logo, MOST, MOST logo, MPLAB, OptoLyzer, PackeTime, PIC, picoPower, PICSTART, PIC32 logo, PolarFire, Prochip Designer, QTouch, SAM-BA, SenGenuity, SpyNIC, SST, SST Logo, SuperFlash, Symmetricom, SyncServer, Tachyon, TempTrackr, TimeSource, tinyAVR, UNI/O, Vectron, and XMEGA are registered trademarks of Microchip Technology Incorporated in the U.S.A. and other countries.

APT, ClockWorks, The Embedded Control Solutions Company, EtherSynch, FlashTec, Hyper Speed Control, HyperLight Load, IntelliMOS, Libero, motorBench, mTouch, Powermite 3, Precision Edge, ProASIC, ProASIC Plus, ProASIC Plus logo, Quiet-Wire, SmartFusion, SyncWorld, Temux, TimeCesium, TimeHub, TimePictra, TimeProvider, Vite, WinPath, and ZL are registered trademarks of Microchip Technology Incorporated in the U.S.A.

Adjacent Key Suppression, AKS, Analog-for-the-Digital Age, Any Capacitor, AnyIn, AnyOut, BlueSky, BodyCom, CodeGuard, CryptoAuthentication, CryptoAutomotive, CryptoCompanion, CryptoController, dsPICDEM, dsPICDEM.net, Dynamic Average Matching, DAM, ECAN, EtherGREEN, In-Circuit Serial Programming, ICSP, INICnet, Inter-Chip Connectivity, JitterBlocker, KleerNet, KleerNet logo, memBrain, Mindi, MiWi, MPASM, MPF, MPLAB Certified logo, MPLIB, MPLINK, MultiTRAK, NetDetach, Omniscient Code Generation, PICDEM, PICDEM.net, PICkit, PICtail, PowerSmart, PureSilicon, QMatrix, REAL ICE, Ripple Blocker, SAM-ICE, Serial Quad I/O, SMART-I.S., SQI, SuperSwitcher, SuperSwitcher II, Total Endurance, TSHARC, USBCheck, VariSense, ViewSpan, WiperLock, Wireless DNA, and ZENA are trademarks of Microchip Technology Incorporated in the U.S.A. and other countries.

SQTP is a service mark of Microchip Technology Incorporated in the U.S.A.

The Adaptec logo, Frequency on Demand, Silicon Storage Technology, and Symmcom are registered trademarks of Microchip Technology Inc. in other countries.

GestIC is a registered trademark of Microchip Technology Germany II GmbH & Co. KG, a subsidiary of Microchip Technology Inc., in other countries.

All other trademarks mentioned herein are property of their respective companies.

© 2004-2020, Microchip Technology Incorporated, All Rights Reserved.

ISBN: 978-1-5224-5810-4

Downloaded from Arrow.com.

Worldwide Sales and Service

AMERICAS

Corporate Office
2355 West Chandler Blvd.
Chandler, AZ 85224-6199
Tel: 480-792-7200
Fax: 480-792-7277
Technical Support:
http://www.microchip.com/support
Web Address:
www.microchip.com

Atlanta
Duluth, GA
Tel: 678-957-9614
Fax: 678-957-1455

Austin, TX
Tel: 512-257-3370

Boston
Westborough, MA
Tel: 774-760-0087
Fax: 774-760-0088

Chicago
Itasca, IL
Tel: 630-285-0071
Fax: 630-285-0075

Dallas
Addison, TX
Tel: 972-818-7423
Fax: 972-818-2924

Detroit
Novi, MI
Tel: 248-848-4000

Houston, TX
Tel: 281-894-5983

Indianapolis
Noblesville, IN
Tel: 317-773-8323
Fax: 317-773-5453
Tel: 317-536-2380

Los Angeles
Mission Viejo, CA
Tel: 949-462-9523
Fax: 949-462-9608
Tel: 951-273-7800

Raleigh, NC
Tel: 919-844-7510

New York, NY
Tel: 631-435-6000

San Jose, CA
Tel: 408-735-9110
Tel: 408-436-4270

Canada - Toronto
Tel: 905-695-1980
Fax: 905-695-2078

ASIA/PACIFIC

Australia - Sydney
Tel: 61-2-9868-6733

China - Beijing
Tel: 86-10-8569-7000

China - Chengdu
Tel: 86-28-8665-5511

China - Chongqing
Tel: 86-23-8980-9588

China - Dongguan
Tel: 86-769-8702-9880

China - Guangzhou
Tel: 86-20-8755-8029

China - Hangzhou
Tel: 86-571-8792-8115

China - Hong Kong SAR
Tel: 852-2943-5100

China - Nanjing
Tel: 86-25-8473-2460

China - Qingdao
Tel: 86-532-8502-7355

China - Shanghai
Tel: 86-21-3326-8000

China - Shenyang
Tel: 86-24-2334-2829

China - Shenzhen
Tel: 86-755-8864-2200

China - Suzhou
Tel: 86-186-6233-1526

China - Wuhan
Tel: 86-27-5980-5300

China - Xian
Tel: 86-29-8833-7252

China - Xiamen
Tel: 86-592-2388138

China - Zhuhai
Tel: 86-756-3210040

ASIA/PACIFIC

India - Bangalore
Tel: 91-80-3090-4444

India - New Delhi
Tel: 91-11-4160-8631

India - Pune
Tel: 91-20-4121-0141

Japan - Osaka
Tel: 81-6-6152-7160

Japan - Tokyo
Tel: 81-3-6880- 3770

Korea - Daegu
Tel: 82-53-744-4301

Korea - Seoul
Tel: 82-2-554-7200

Malaysia - Kuala Lumpur
Tel: 60-3-7651-7906

Malaysia - Penang
Tel: 60-4-227-8870

Philippines - Manila
Tel: 63-2-634-9065

Singapore
Tel: 65-6334-8870

Taiwan - Hsin Chu
Tel: 886-3-577-8366

Taiwan - Kaohsiung
Tel: 886-7-213-7830

Taiwan - Taipei
Tel: 886-2-2508-8600

Thailand - Bangkok
Tel: 66-2-694-1351

Vietnam - Ho Chi Minh
Tel: 84-28-5448-2100

EUROPE

Austria - Wels
Tel: 43-7242-2244-39
Fax: 43-7242-2244-393

Denmark - Copenhagen
Tel: 45-4485-5910
Fax: 45-4485-2829

Finland - Espoo
Tel: 358-9-4520-820

France - Paris
Tel: 33-1-69-53-63-20
Fax: 33-1-69-30-90-79

Germany - Garching
Tel: 49-8931-9700

Germany - Haan
Tel: 49-2129-3766400

Germany - Heilbronn
Tel: 49-7131-72400

Germany - Karlsruhe
Tel: 49-721-625370

Germany - Munich
Tel: 49-89-627-144-0
Fax: 49-89-627-144-44

Germany - Rosenheim
Tel: 49-8031-354-560

Israel - Ra'anana
Tel: 972-9-744-7705

Italy - Milan
Tel: 39-0331-742611
Fax: 39-0331-466781

Italy - Padova
Tel: 39-049-7625286

Netherlands - Drunen
Tel: 31-416-690399
Fax: 31-416-690340

Norway - Trondheim
Tel: 47-7288-4388

Poland - Warsaw
Tel: 48-22-3325737

Romania - Bucharest
Tel: 40-21-407-87-50

Spain - Madrid
Tel: 34-91-708-08-90
Fax: 34-91-708-08-91

Sweden - Gothenberg
Tel: 46-31-704-60-40

Sweden - Stockholm
Tel: 46-8-5090-4654

UK - Wokingham
Tel: 44-118-921-5800
Fax: 44-118-921-5820

© 2020 Microchip Technology Inc.

Downloaded from Arrow.com.