Downloaded from Arrow.com.

HI2220R301R-10

UNCONTROLLED DOCUMENT

PHYSICAL DIMENSIONS:

A	5.59 [.220]	±	0.51 [.020]
B	5.08 [.200]	±	0.25 [.010]
C	3.20 [.126]	±	0.25 [.010]
D	0.76 [.030]	±	0.25 [.010]

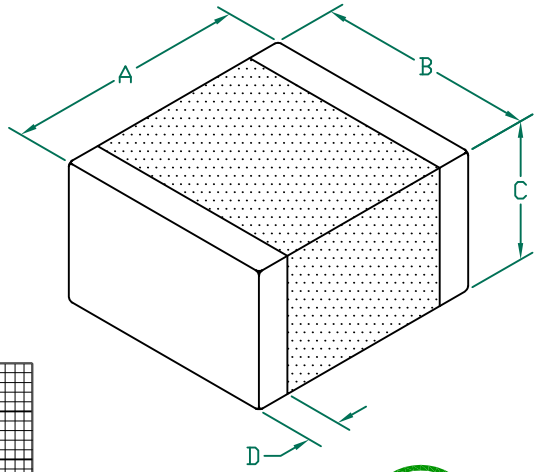

ELECTRICAL CHARACTERISTICS:

	Z @ 100MHz (Ω)	DCR (Ω)	Rated Current
Nominal	300		
Minimum	225		
Maximum	375	0.020	5000 mA

NOTES: UNLESS OTHERWISE SPECIFIED

1. TAPED AND REELED per CURRENT EIA SPECIFICATIONS 13" REELS, 2,000 PCS/REEL.
2. TERMINATION FINISH IS 100% TIN.
3. COMPONENTS SHOULD BE ADEQUATELY PREHEATED BEFORE SOLDERING.
4. OPERATEING TEMPERATURE TEMP: −40°C~+125°C (INCLUDING SELF−HEATING)

Z vs. FREQUENCY
IMPEDANCE UNDER DC BIAS

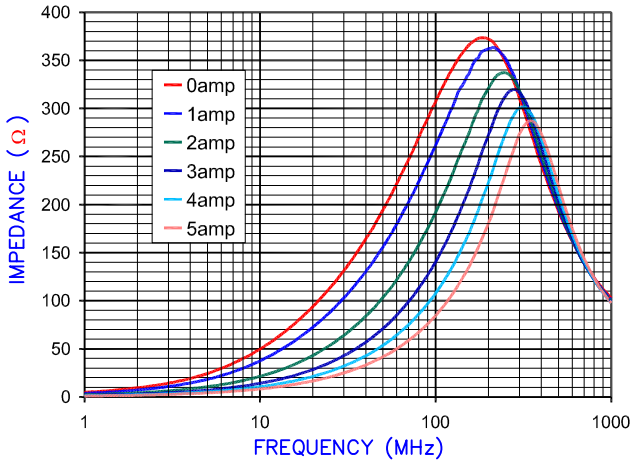

|Z| , R, AND XL vs. FREQUENCY

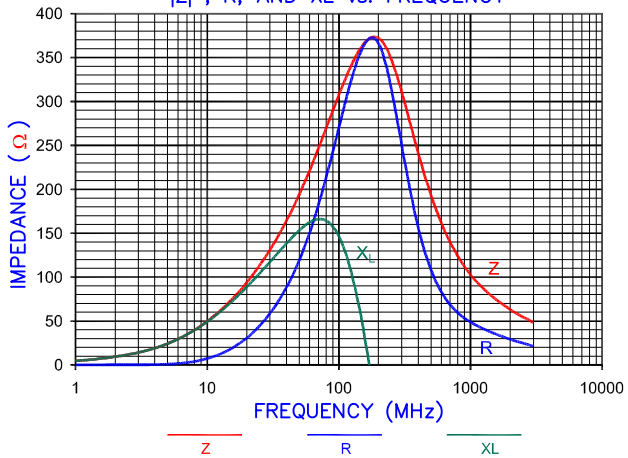

AGILENT E4991A RF Impedance/Material Analyzer
HP 16092A Test Fixture. TEST REF. 3185

LAND PATTERNS FOR REFLOW SOLDERING

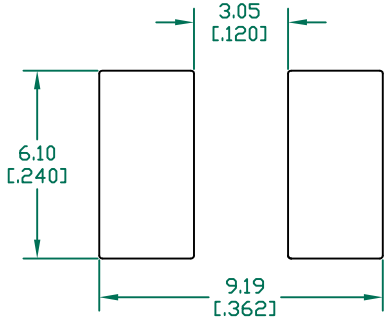

(For wave soldering, add 0.762 [0.030] to this dimension)

RECOMMENDED SOLDERING CONDITIONS

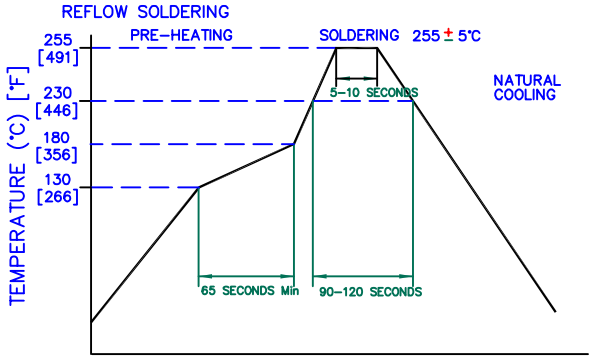

RoHS 2002/95/EC

DIMENSIONS ARE IN mm [INCHES].

This print is the property of Laird Tech. and is loaned in confidence subject to return upon request and with the understanding that no copies shall be made without the written consent of Laird Tech. All rights to design or invention are reserved.

Laird

REV	DESCRIPTION	DATE	INT
C	ADD OPERATING TEMPERATURE UPDATE LAIRD LOGO AND REFLOW CURVE	08/05/13	QU
B	UPDATE COMPANY LOGO ADD ROHS	01/28/08	JRK
A	ORIGINAL DRAFT	04/03/04	TMB

PROJECT/PART NUMBER:	REV	PART TYPE:	DRAWN BY:
HI2220R301R−10	C	CO−FIRE	TMB

DATE: 04/03/04 SCALE: NTS SHEET: 2 of 2
CAD # HI2220R301R−10−C TOOL # −