Downloaded from Arrow.com.

Customer Information Sheet

DRAWING No.: M80-866XXXX	SHEET 2 OF 2	IF IN DOUBT - ASK	©	NOT TO SCALE	THIRD ANGLE PROJECTION	ALL DIMENSIONS IN mm

SPECIFICATONS:
- MATERIAL:
  - MOULDING = GLASS-FILLED POLYESTER, UL94V-0, BLACK
  - CONTACTS = PHOSPHOR BRONZE
  - LATCHES = BERYLLIUM COPPER
- FINISH:
  - CONTACTS:
    - 05 = 0.75µ GOLD
    - 22 = 0.75µ GOLD ON CONTACT AREA. 3.0µ 90/10 TIN/LEAD ON TAILS
  - LATCH = 1.25µ NICKEL
- ELECTRICAL:
  - CURRENT RATING (25°C) = 3.0A MAX.
  - CURRENT RATING (85°C) = 2.2A MAX.
  - WORKING VOLTAGE = 120V AC/DC
  - VOLTAGE PROOF = 360V AC/DC
  - CONTACT RESISTANCE:
    - INITIAL = 20 mΩ MAX.
    - AFTER CONDITIONING = 25 mΩ MAX.
  - INSULATION RESISTANCE:
    - INITIAL = 1000 MΩ MIN.
    - AFTER CONDITIONING = 100 MΩ MIN.
- MECHANICAL:
  - DURABILITY = 500 OPERATIONS
- ENVIRONMENTAL:
  - TEMPERATURE RANGE = -55°C TO +125°C
- PACKING:
  - TUBE

FOR COMPLETE SPECIFICATION, SEE COMPONENT SPECIFICIATION C005XX (LATEST ISSUE)

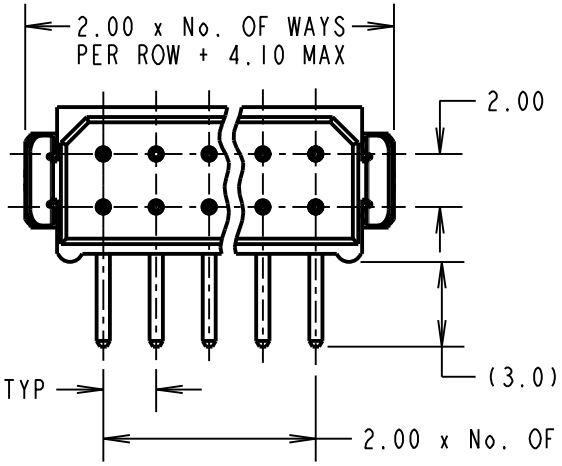

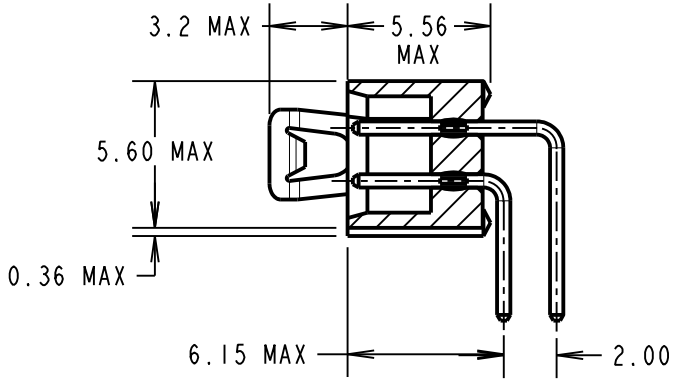

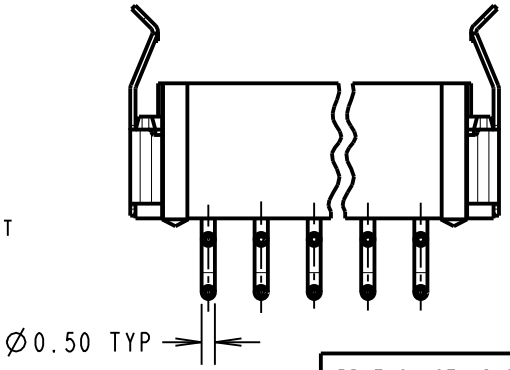

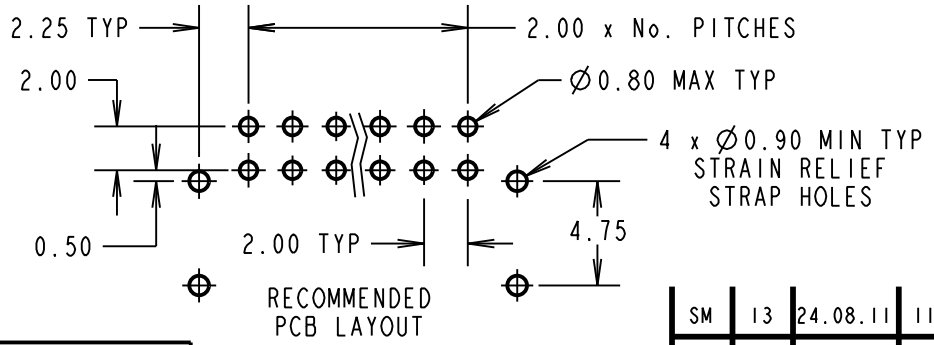

NOTES:
1. 2-OFF STRAIN RELIEF STRAPS M80-0030006 ARE INCLUDED WITH THIS CONNECTOR.
2. FOR RoHS COMPLIANT EQUIVALENT PRODUCT USE M80-851XXXX CONNECTORS.

BRITISH STANDARD ORDER CODE:
B5743-2XX-M-L-X
- TOTAL No. OF WAYS: 04, 06, 08, 10, 12, 14, 16, 18, 20, 26, 34, 44
- FINISH:
  - 1 = SELECTIVE GOLD + TIN/LEAD
  - 3 = GOLD

ORDER CODE:
M80-866XXXX
- TOTAL No. OF WAYS: 04, 06, 08, 10, 12, 14, 16, 18, 20, 26, 34, 44
- FINISH:
  - 05 = GOLD
  - 22 = SELECTIVE GOLD & TIN/LEAD

SM	13	24.08.11	11434
NAME	ISS.	DATE	C/NOTE

APPROVED: S. MCCULLAGH
CHECKED: M. G. PLESTED
DRAWN: K. SHIER
CUSTOMER REF.:
ASSEMBLY DRG:

HARWIN

HARWIN USA	HARWIN Europe (UK)	HARWIN Asia
TEL: 603 893 5376	TEL: 023 9231 4545	TEL: +65 6 779 4909
FAX: 603 893 5396	FAX: 023 9231 4590	FAX: +65 6 779 3868
mis@harwin.com	mis@harwin.co.uk	mis@harwin.com.sg

THIS DRAWING AND ANY INFORMATION OR DESCRIPTIVE MATTER SET OUT HEREON ARE CONFIDENTIAL AND COPYRIGHT PROPERTY OF THE HARWIN GROUP AND MUST NOT BE DISCLOSED, LOANED, COPIED OR USED FOR MANUFACTURING, TENDERING OR FOR ANY OTHER PURPOSE WITHOUT THEIR WRITTEN PERMISSION.

TOLERANCES
X. = ±1mm
X.X = ±0.25mm
X.XX = ±0.10mm
X.XXX = ±0.01mm
ANGLES = ±5°
UNLESS STATED

MATERIAL: SEE ABOVE
FINISH: SEE ABOVE
S/AREA: mm²

TITLE: DATAMATE DIL HORIZONTAL MALE PC TAIL ASSEMBLY - LATCHED

DRAWING NUMBER: M80-866XXXX

SHT 2 OF 2