TABLE OF CONTENTS

Features ... 1
Applications ... 1
Functional Block Diagram ... 1
General Description ... 1
Revision History ... 2
Specifications ... 3
Dual Supply ... 3
Single Supply ... 4
Absolute Maximum Ratings ... 6
Thermal Resistance ... 6
ESD Caution ... 6
Pin Configuration and Function Descriptions ... 7
Terminology ... 8
Typical Performance Characteristics ... 9
Test Circuits ... 13
Outline Dimensions ... 15
Ordering Guide ... 15

REVISION HISTORY

9/2017—Rev. A to Rev. B

Change to Features Section ... 1

3/2009—Rev. 0 to Rev. A

Changes to Power Requirements, I_{DD}, Digital Inputs = 5 V Parameter, Table 1 ... 4
Changes to t_{ON} Parameter and Power Requirements, I_{DD}, Digital Inputs = 5 V Parameter, Table 2 ... 5

2/2007—Rev. 0: Initial Version

Downloaded from Arrow.com.

SPECIFICATIONS

DUAL SUPPLY

V_{DD} = 15 V ± 10%, V_{SS} = −15 V ± 10%, GND = 0 V, unless otherwise noted.

Table 1.

Parameter	Temperature 25°C	−40°C to +85°C	−40°C to +125°C	Unit	Test Conditions/Comments
ANALOG SWITCH					
Analog Signal Range			V_{DD} to V_{SS}	V	
On Resistance, R_{ON}					V_{DD} = +13.5 V, V_{SS} = −13.5 V, V_S = ±10 V, I_S = −1 mA (see Figure 23)
	120			Ω typ	
	200	240	270	Ω max	
On Resistance Match Between Channels, ΔR_{ON}					V_S = ±10 V, I_S = −1 mA
	2.5			Ω typ	
	6	10	12	Ω max	
On Resistance Flatness, $R_{FLAT(ON)}$					V_S = −5 V/0 V/+5 V; I_S = −1 mA
	20			Ω typ	
	64	76	83	Ω max	
LEAKAGE CURRENTS					V_{DD} = +16.5 V, V_{SS} = −16.5 V
Source Off Leakage, I_S (Off)					V_S = ±10 V, V_D = ±10 V (see Figure 24)
	±0.002			nA typ	
	±0.1	±0.6	±1	nA max	
Drain Off Leakage, I_D (Off)					V_S = ±10 V, V_D = ±10 V (see Figure 24)
	±0.002			nA typ	
	±0.1	±0.6	±1	nA max	
Channel On Leakage, I_D, I_S (On)					V_S = V_D = ±10 V (see Figure 25)
	±0.01			nA typ	
	±0.2	±0.6	±1	nA max	
DIGITAL INPUTS					
Input High Voltage, V_{INH}			2.0	V min	
Input Low Voltage, V_{INL}			0.8	V max	
Input Current, I_{INL} or I_{INH}					V_{IN} = V_{INL} or V_{INH}
	0.005			µA typ	
			±0.1	µA max	
Digital Input Capacitance, C_{IN}	2.5			pF typ	
DYNAMIC CHARACTERISTICS[1]					
t_{ON}					R_L = 300 Ω, C_L = 35 pF, V_S = 10 V (see Figure 26)
	130			ns typ	
	170	210	240	ns max	
t_{OFF}					R_L = 300 Ω, C_L = 35 pF, V_S = 10 V (see Figure 26)
	85			ns typ	
	105	130	140	ns max	
Break-Before-Make Time Delay (ADG1223 Only), t_{BBM}					R_L = 300 Ω, C_L = 35 pF, V_{S1} = V_{S2} = 10 V (see Figure 27)
	40			ns typ	
			10	ns min	
Charge Injection, Q_{INJ}	0.1			pC typ	V_S = 0 V, R_S = 0 Ω, C_L = 1 nF (see Figure 28)
Off Isolation	75			dB typ	R_L = 50 Ω, C_L = 1 pF, f = 1 MHz (see Figure 29)

Downloaded from Arrow.com.

Parameter	Temperature 25°C	−40°C to +85°C	−40°C to +125°C	Unit	Test Conditions/Comments
Channel-to-Channel Crosstalk	90			dB typ	R_L = 50 Ω, C_L = 1 pF, f = 1 MHz (see Figure 30)
Total Harmonic Distortion + Noise, THD + N	0.15			% typ	R_L = 10 kΩ, 5 V rms, f = 20 Hz to 20 kHz
−3 dB Bandwidth	960			MHz typ	R_L = 50 Ω, C_L = 1 pF (see Figure 31)
C_S (Off)					V_S = 0 V, f = 1 MHz
	1.7			pF typ	
	2.2			pF max	
C_D (Off)					V_S = 0 V, f = 1 MHz
	1.7			pF typ	
	2.2			pF max	
C_D, C_S (On)					V_S = 0 V, f = 1 MHz
	3			pF typ	
	4			pF max	
POWER REQUIREMENTS					V_{DD} = +16.5 V, V_{SS} = −16.5 V
I_{DD}					
	0.001			µA typ	Digital inputs = 0 V or V_{DD}
			1.0	µA max	Digital inputs = 0 V or V_{DD}
	140			µA typ	Digital inputs = 5 V
			190	µA max	Digital inputs = 5 V
I_{SS}					Digital inputs = 0 V, 5 V, or V_{DD}
	0.001			µA typ	
			1.0	µA max	
V_{DD}/V_{SS}			±5/±16.5	V min/max	GND = 0 V

[1] Guaranteed by design, not subject to production test.

SINGLE SUPPLY

V_{DD} = 12 V ± 10%, V_{SS} = 0 V, GND = 0 V, unless otherwise noted.

Table 2.

Parameter	Temperature 25°C	−40°C to +85°C	−40°C to +125°C	Unit	Test Conditions/Comments
ANALOG SWITCH					
Analog Signal Range			0 V to V_{DD}	V	
On Resistance, R_{ON}					V_{DD} = 10.8 V, V_{SS} = 0 V, V_S = 0 V to 10 V, I_S = −1 mA (see Figure 23)
	300			Ω typ	
	475	567	625	Ω max	
On Resistance Match Between Channels, ΔR_{ON}					V_S = 0 V to 10 V, I_S = −1 mA
	4.5			Ω typ	
	16	26	27	Ω max	
On Resistance Flatness, $R_{FLAT(ON)}$	60			Ω typ	V_S = 3 V/6 V/9 V, I_S = −1 mA
LEAKAGE CURRENTS					V_{DD} = 13.2 V, V_{SS} = 0 V
Source Off Leakage, I_S (Off)					V_S = 1 V/10 V, V_D = 10 V/1 V (see Figure 24)
	±0.002			nA typ	
	±0.1	±0.6	±1	nA max	

Downloaded from Arrow.com.

Parameter	Temperature 25°C	–40°C to +85°C	–40°C to +125°C	Unit	Test Conditions/Comments
Drain Off Leakage, I_D (Off)					V_S = 1 V/10 V, V_D = 10 V/1 V (see Figure 24)
	±0.002			nA typ	
	±0.1	±0.6	±1	nA max	
Channel On Leakage, I_D, I_S (On)					V_S = V_D = 1 V or 10 V (see Figure 25)
	±0.01			nA typ	
	±0.2	±0.6	±1	nA max	
DIGITAL INPUTS					
Input High Voltage, V_{INH}			2.0	V min	
Input Low Voltage, V_{INL}			0.8	V max	
Input Current, I_{INL} or I_{INH}					V_{IN} = V_{INL} or V_{INH}
	0.001			µA typ	
			±0.1	µA max	
Digital Input Capacitance, C_{IN}	3			pF typ	
DYNAMIC CHARACTERISTICS[1]					
t_{ON}					R_L = 300 Ω, C_L = 35 pF, V_S = 8 V (see Figure 26)
	190			ns typ	
	250	300	345	ns max	
t_{OFF}					R_L = 300 Ω, C_L = 35 pF, V_S = 8 V (see Figure 26)
	120			ns typ	
	150	190	225	ns max	
Break-Before-Make Time Delay (ADG1223 Only), t_{BBM}					R_L = 300 Ω, C_L = 35 pF, V_{S1} = V_{S2} = 8 V (see Figure 27)
	70			ns typ	
			10	ns min	
Charge Injection, Q_{INJ}	0.2			pC typ	V_S = 6 V, R_S = 0 Ω, C_L = 1 nF (see Figure 28)
Off Isolation	75			dB typ	R_L = 50 Ω, C_L =1 pF, f = 1 MHz (see Figure 29)
Channel-to-Channel Crosstalk	90			dB typ	R_L = 50 Ω, C_L = 1 pF, f = 1 MHz (see Figure 30)
–3 dB Bandwidth	550			MHz typ	R_L = 50 Ω, C_L = 1 pF (see Figure 31)
C_S (Off)					V_S = 6 V, f = 1 MHz
	2.1			pF typ	
	2.6			pF max	
C_D (Off)					V_S = 6 V, f = 1 MHz
	2.1			pF typ	
	2.6			pF max	
C_D, C_S (On)					V_S = 6 V, f = 1 MHz
	3.8			pF typ	
	4.6			pF max	
POWER REQUIREMENTS					V_{DD} = 13.2 V
I_{DD}	0.001			µA typ	Digital inputs = 0 V or V_{DD}
			1.0	µA max	Digital inputs = 0 V or V_{DD}
	140			µA typ	Digital inputs = 5 V
			190	µA max	Digital inputs = 5 V
V_{DD}			5/16.5	V min/max	V_{SS} = 0 V, GND = 0 V

[1] Guaranteed by design, not subject to production test.

Downloaded from Arrow.com.

ABSOLUTE MAXIMUM RATINGS

T_A = 25°C, unless otherwise noted.

Table 3.

Parameter	Rating
V_{DD} to V_{SS}	35 V
V_{DD} to GND	−0.3 V to +25 V
V_{SS} to GND	+0.3 V to −25 V
Analog Inputs[1]	V_{SS} − 0.3 V to V_{DD} + 0.3 V or 30 mA, whichever occurs first
Digital Inputs[1]	GND − 0.3 V to V_{DD} + 0.3 V or 30 mA, whichever occurs first
Peak Current, S or D	100 mA (pulsed at 1 ms, 10% duty cycle max)
Continuous Current per Channel, S or D	30 mA
Operating Temperature Range	−40°C to +125°C
Storage Temperature Range	−65°C to +150°C
Junction Temperature	150°C
Reflow Soldering Peak Temperature, Pb free	260°C

[1] Overvoltages at IN, S, or D are clamped by internal diodes. Current must be limited to the maximum ratings given.

Stresses at or above those listed under Absolute Maximum Ratings may cause permanent damage to the product. This is a stress rating only; functional operation of the product at these or any other conditions above those indicated in the operational section of this specification is not implied. Operation beyond the maximum operating conditions for extended periods may affect product reliability.

THERMAL RESISTANCE

θ_{JA} is specified for the worst-case conditions, that is, a device soldered in a circuit board for surface-mount packages.

Table 4. Thermal Resistance

Package Type	θ_{JA}	θ_{JC}	Unit
10-Lead MSOP (4-Layer Board)	206	44	°C/W

ESD CAUTION

ESD (electrostatic discharge) sensitive device. Charged devices and circuit boards can discharge without detection. Although this product features patented or proprietary protection circuitry, damage may occur on devices subjected to high energy ESD. Therefore, proper ESD precautions should be taken to avoid performance degradation or loss of functionality.

Downloaded from Arrow.com.

PIN CONFIGURATION AND FUNCTION DESCRIPTIONS

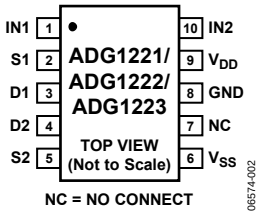

Figure 3. 10-Lead MSOP Pin Configuration

Table 5. Pin Function Descriptions

Pin No.	Mnemonic	Description
1	IN1	Logic Control Input.
2	S1	Source Terminal. Can be an input or output.
3	D1	Drain Terminal. Can be an input or output.
4	D2	Drain Terminal. Can be an input or output.
5	S2	Source Terminal. Can be an input or output.
6	V_{SS}	Most Negative Power Supply Potential.
7	NC	No Connect.
8	GND	Ground (0 V) Reference.
9	V_{DD}	Most Positive Power Supply Potential.
10	IN2	Logic Control Input.

Table 6. ADG1221/ADG1222 Truth Table

ADG1221 INx	ADG1222 INx	Switch Condition
1	0	On
0	1	Off

Table 7. ADG1223 Truth Table

ADG1223 INx	Switch 1 Condition	Switch 2 Condition
0	Off	On
1	On	Off

Downloaded from Arrow.com.

TERMINOLOGY

I_{DD}
The positive supply current.

I_{SS}
The negative supply current.

V_D (V_S)
The analog voltage on Terminal D and Terminal S.

R_{ON}
The ohmic resistance between Terminal D and Terminal S.

$R_{FLAT(ON)}$
Flatness is defined as the difference between the maximum and minimum value of on resistance, as measured over the specified analog signal range.

I_S (Off)
The source leakage current with the switch off.

I_D (Off)
The drain leakage current with the switch off.

I_D, I_S (On)
The channel leakage current with the switch on.

V_{INL}
The maximum input voltage for Logic 0.

V_{INH}
The minimum input voltage for Logic 1.

I_{INL} (I_{INH})
The input current of the digital input.

C_S (Off)
The off switch source capacitance, measured with reference to ground.

C_D (Off)
The off switch drain capacitance, measured with reference to ground.

C_D, C_S (On)
The on switch capacitance, measured with reference to ground.

C_{IN}
The digital input capacitance.

t_{ON}
The delay between applying the digital control input and the output switching on (see Figure 26).

t_{OFF}
The delay between applying the digital control input and the output switching off (see Figure 26).

t_{BBM}
Off time or on time measured between the 90% points of both switches, when switching from one address state to another (ADG1223 only).

Q_{INJ} (Charge Injection)
A measure of the glitch impulse transferred from the digital input to the analog output during switching.

Off Isolation
A measure of unwanted signal coupling through an off switch.

Crosstalk
A measure of unwanted signal that is coupled through from one channel to another as a result of parasitic capacitance.

–3 dB Bandwidth
The frequency at which the output is attenuated by 3 dB.

On Response
The frequency response of the on switch.

Insertion Loss
The loss due to the on resistance of the switch.

THD + N (Total Harmonic Noise Plus Distortion)
The ratio of the harmonic amplitude plus noise of the signal to the fundamental.

ACPSRR (AC Power Supply Rejection Ratio)
Measures the ability of a part to avoid coupling noise and spurious signals that appear on the supply voltage pin to the output of the switch. The dc voltage on the device is modulated by a sine wave of 0.62 V p-p. The ratio of the amplitude of signal on the output to the amplitude of the modulation is the ACPSRR.

Downloaded from Arrow.com.

TYPICAL PERFORMANCE CHARACTERISTICS

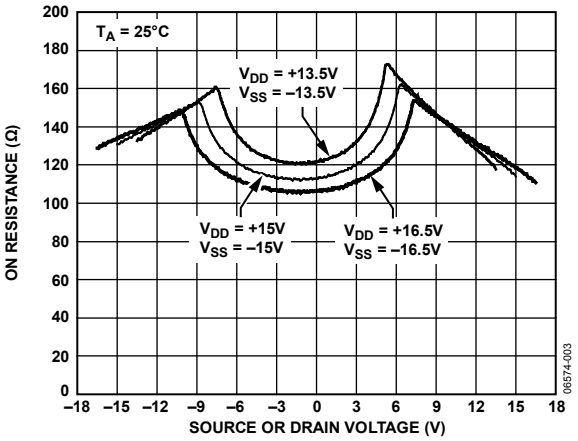

Figure 4. On Resistance as a Function of V_S (V_D), Dual Supply

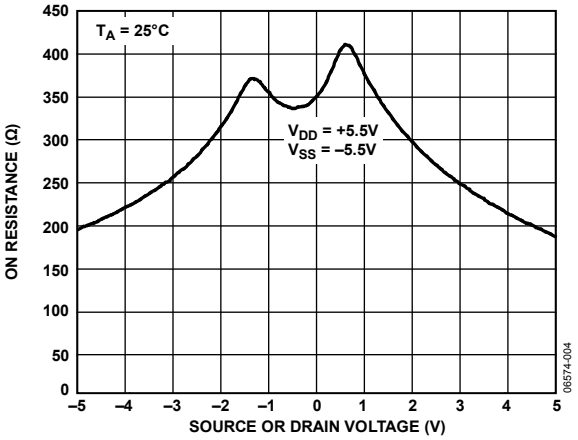

Figure 5. On Resistance as a Function of V_S (V_D), Dual Supply

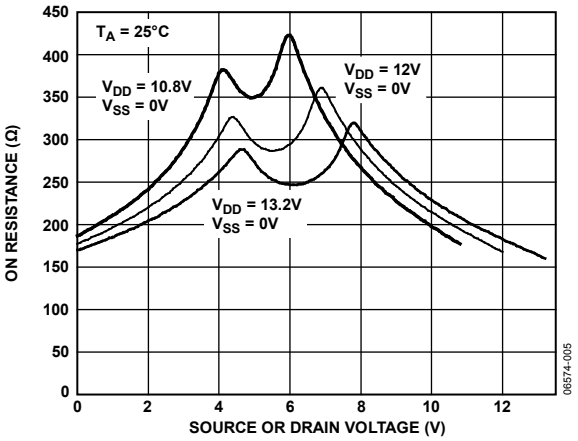

Figure 6. On Resistance as a Function of V_S (V_D), Single Supply

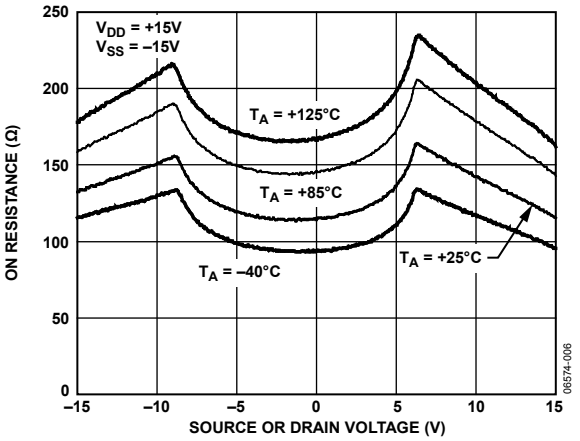

Figure 7. On Resistance as a Function of V_S (V_D) for Different Temperatures, Dual Supply

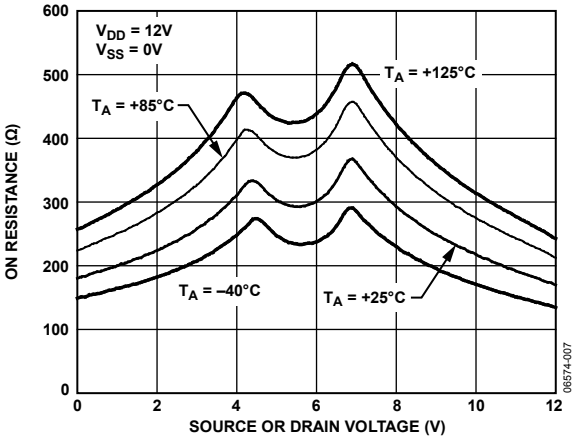

Figure 8. On Resistance as a Function of V_S (V_D) for Different Temperatures, Single Supply

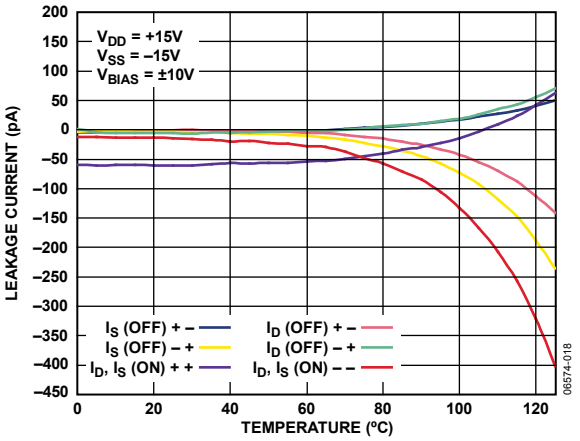

Figure 9. Leakage Current as a Function of Temperature, Dual Supply

Downloaded from Arrow.com.

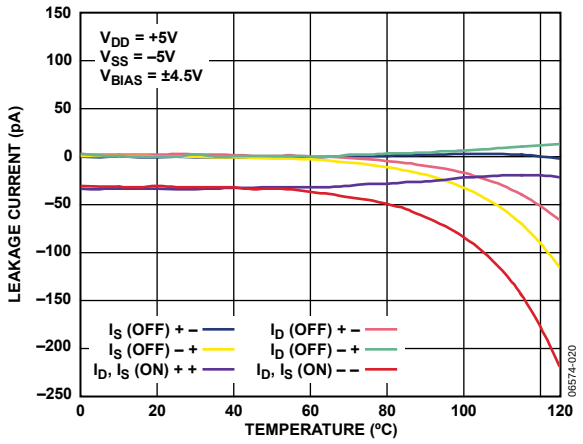

Figure 10. Leakage Current as a Function of Temperature, Dual Supply

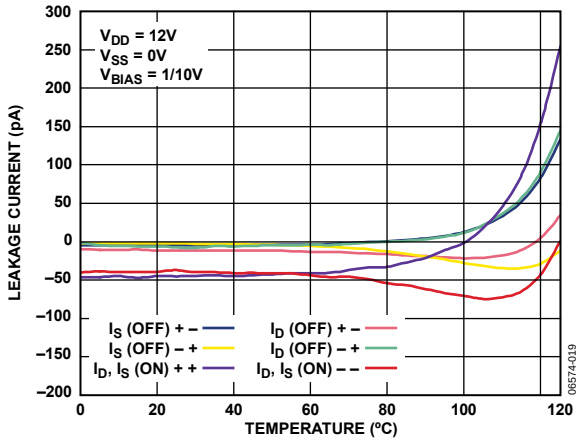

Figure 11. Leakage Current as a Function of Temperature, Single Supply

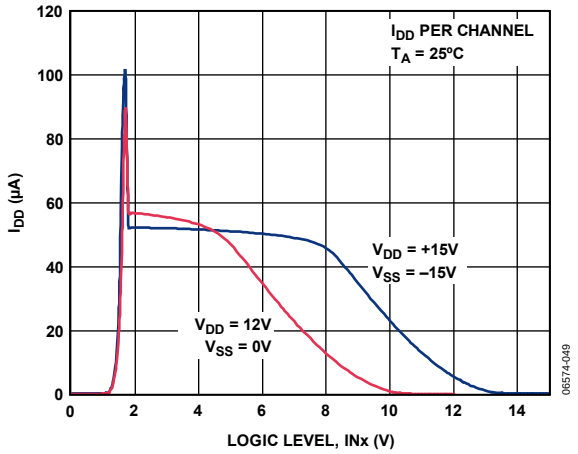

Figure 12. I_{DD} vs. Logic Level

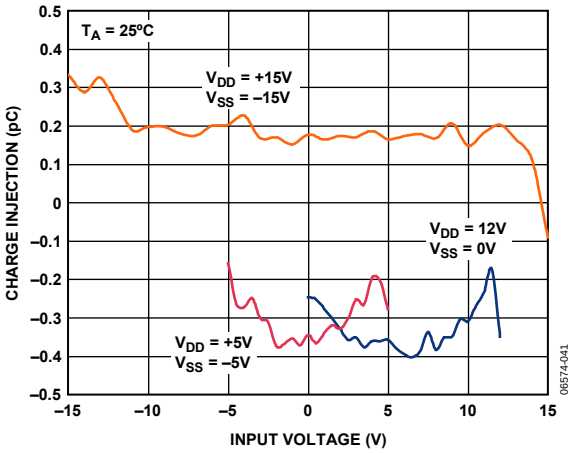

Figure 13. Charge Injection vs. Input Voltage

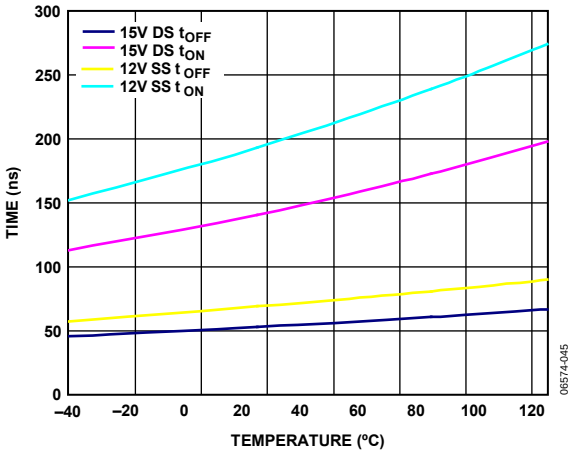

Figure 14. t_{ON}/t_{OFF} vs. Temperature

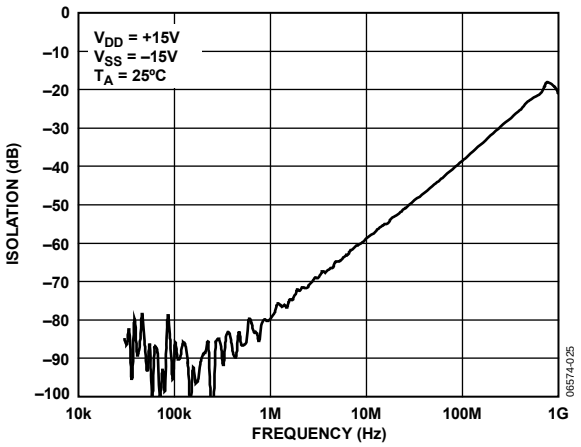

Figure 15. Off Isolation vs. Frequency

Downloaded from Arrow.com.

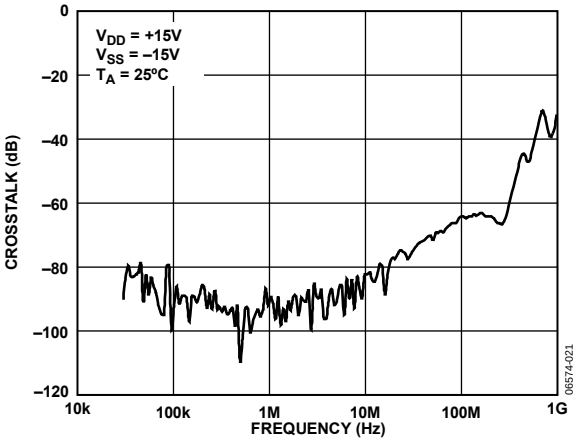

Figure 16. Crosstalk vs. Frequency

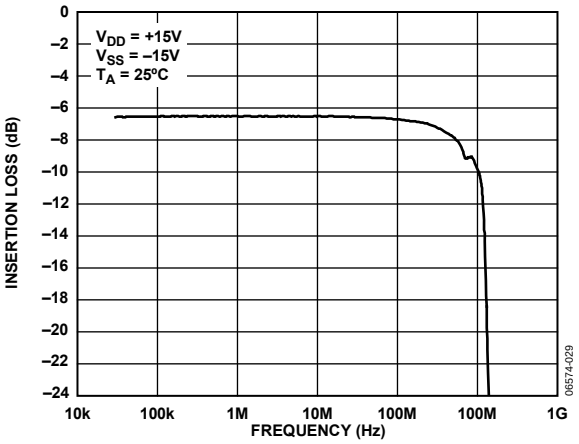

Figure 17. Insertion Loss vs. Frequency

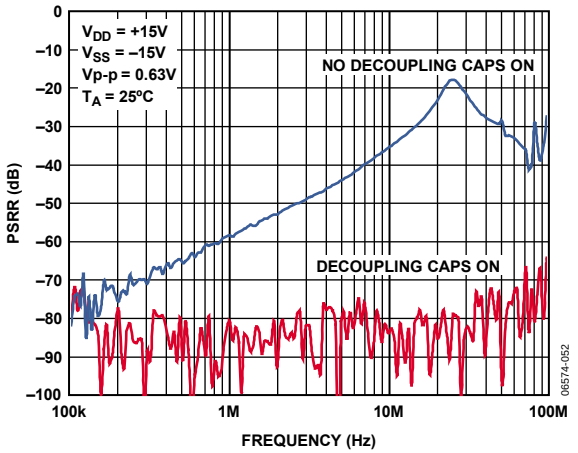

Figure 18. ACPSRR vs. Frequency

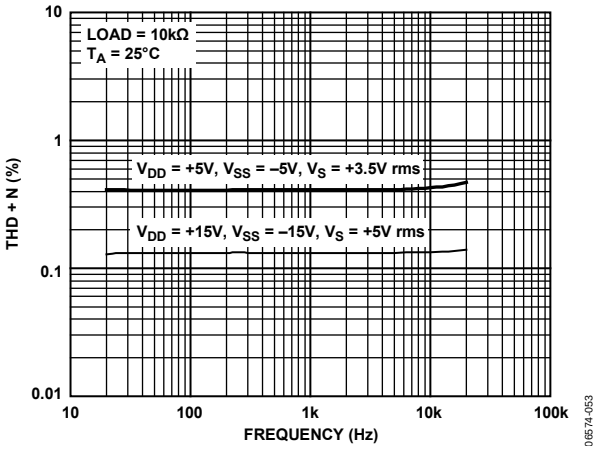

Figure 19. THD + N vs. Frequency

Downloaded from Arrow.com.

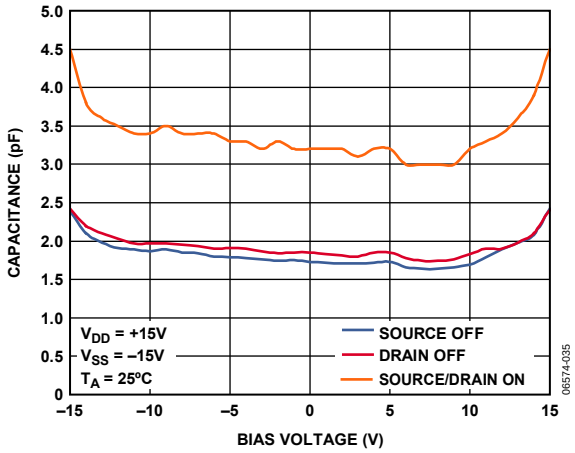

Figure 20. Capacitance vs. Bias Voltage

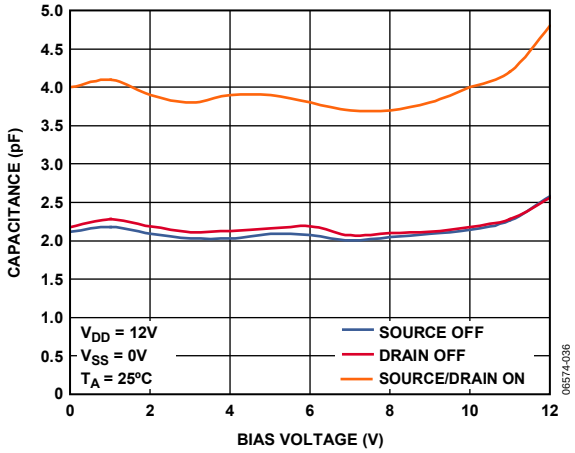

Figure 21. Capacitance vs. Bias Voltage

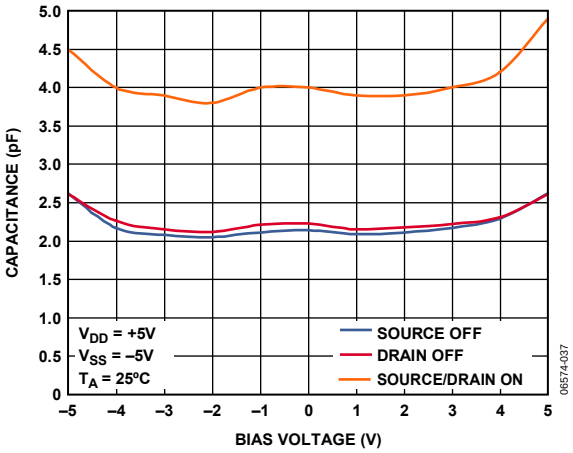

Figure 22. Capacitance vs. Bias Voltage

Downloaded from Arrow.com.

TEST CIRCUITS

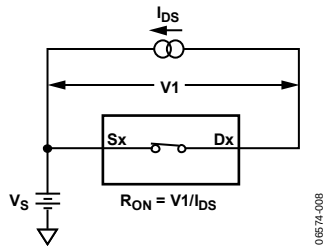

Figure 23. Test Circuit 1—On Resistance

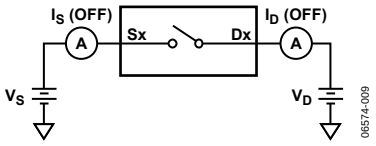

Figure 24. Test Circuit 2—Off Leakage

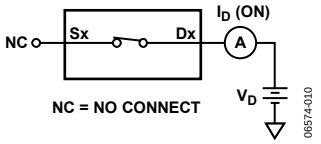

Figure 25. Test Circuit 3—On Leakage

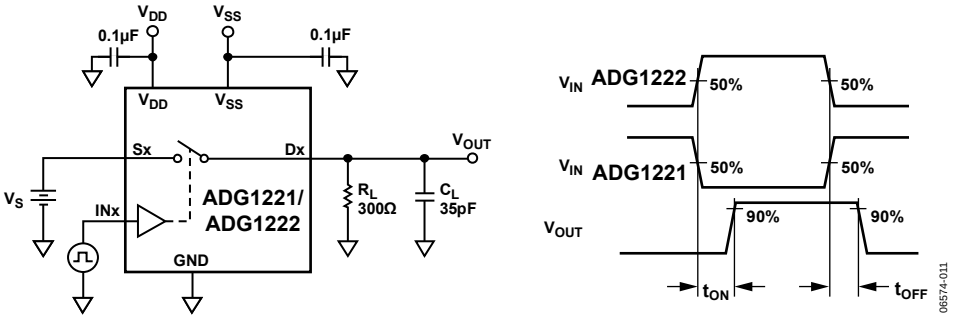

Figure 26. Test Circuit 4—Switching Times

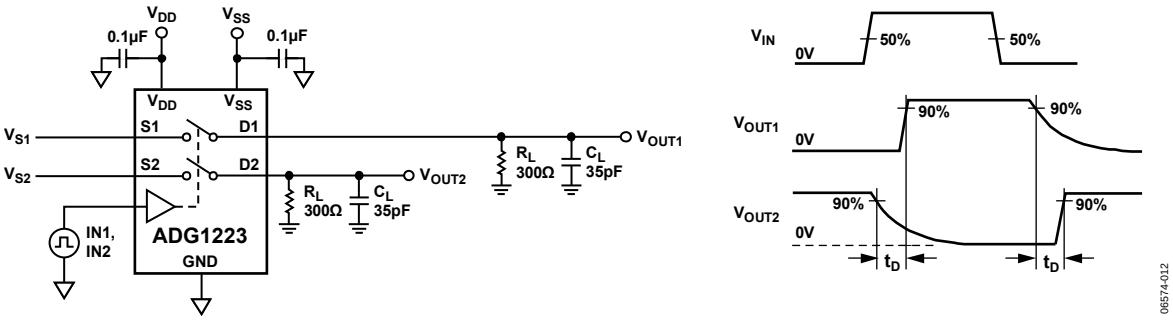

Figure 27. Test Circuit 5—Break-Before-Make Time Delay

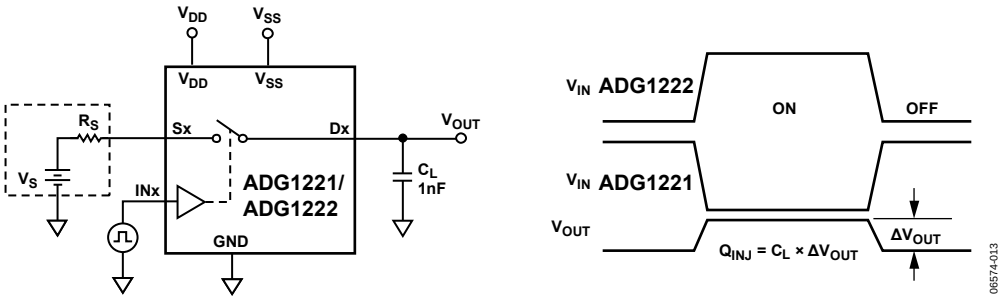

Figure 28. Test Circuit 6—Charge Injection

Downloaded from Arrow.com.

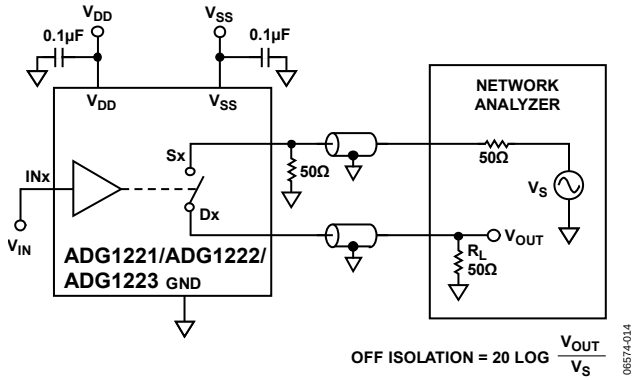

Figure 29. Test Circuit 7—Off Isolation

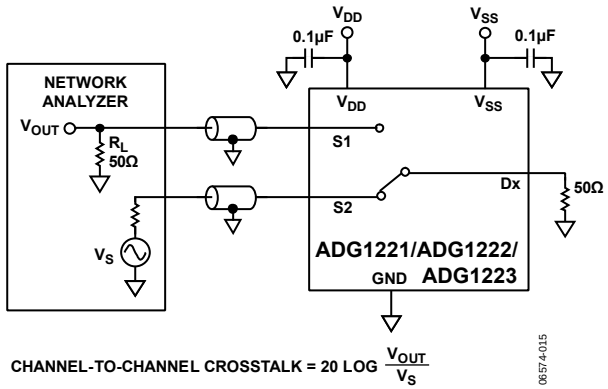

Figure 30. Test Circuit 8—Channel-to-Channel Crosstalk

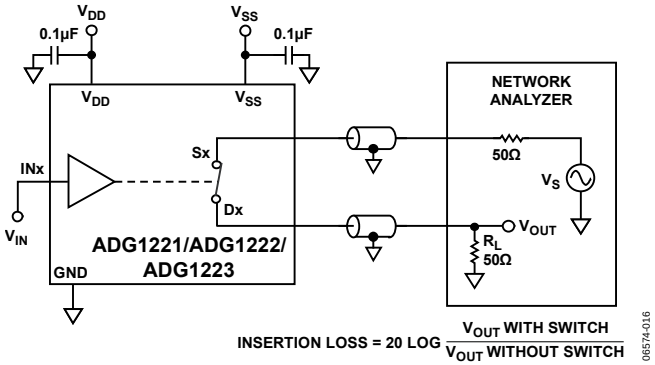

Figure 31. Test Circuit 9—Bandwidth

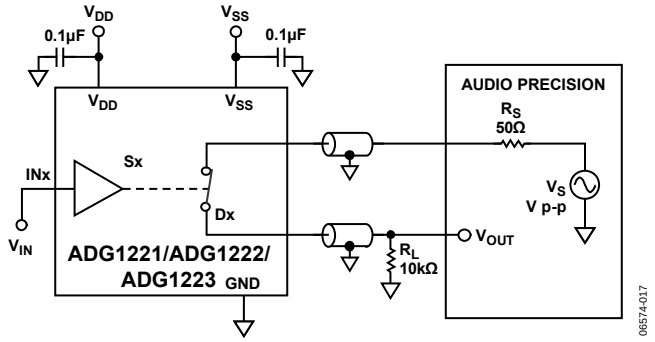

Figure 32. Test Circuit 10—Total Harmonic Distortion + Noise

Downloaded from Arrow.com.

OUTLINE DIMENSIONS

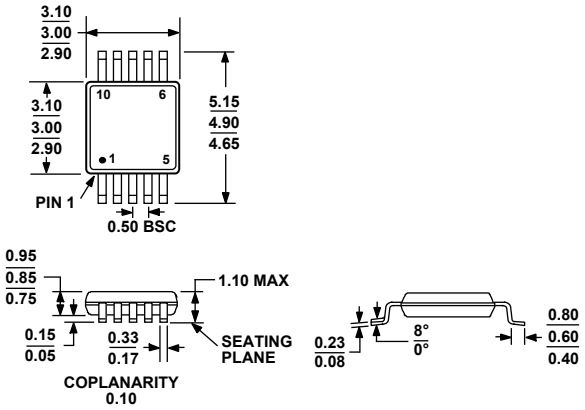

Figure 33. 10-Lead Mini Small Outline Package [MSOP] (RM-10) Dimensions shown in millimeters

ORDERING GUIDE

Model[1]	Temperature Range	Package Description	Package Option	Branding
ADG1221BRMZ	−40°C to +125°C	10-Lead Mini Small Outline Package (MSOP)	RM-10	S27
ADG1221BRMZ-REEL7	−40°C to +125°C	10-Lead Mini Small Outline Package (MSOP)	RM-10	S27
ADG1222BRMZ	−40°C to +125°C	10-Lead Mini Small Outline Package (MSOP)	RM-10	S28
ADG1222BRMZ-REEL7	−40°C to +125°C	10-Lead Mini Small Outline Package (MSOP)	RM-10	S28
ADG1223BRMZ	−40°C to +125°C	10-Lead Mini Small Outline Package (MSOP)	RM-10	S2J
ADG1223BRMZ-REEL7	−40°C to +125°C	10-Lead Mini Small Outline Package (MSOP)	RM-10	S2J

[1] Z = Pb-free part.

Downloaded from Arrow.com.

NOTES

©2007–2017 Analog Devices, Inc. All rights reserved. Trademarks and registered trademarks are the property of their respective owners.
D06574-0-9/17(B)

Downloaded from Arrow.com.