TOP LAYER DESCRIPTION	TABLE I PLATED THROUGH-HOLE REQUIREMENTS							
	DRILLED HOLE DIAMETER	COPPER THICKNESS	TIN-LEAD THICKNESS	NICKEL THICKNESS	GOLD THICKNESS	TIN THICKNESS	SILVER THICKNESS	FINISHED HOLE DIAMETER (DIM"A")
TIN-LEAD	0.81-0.86 (0.85 DRILL)	0.025 - 0.050	0.005 - 0.015	--	--	--	--	0.65 - 0.80
IMMERSION TIN	0.81-0.86 (0.85 DRILL)	0.025 - 0.050	--	--	--	0.9 - 1.5um	--	0.70 - 0.80
IMMERSION SILVER	0.81-0.86 (0.85 DRILL)	0.025 - 0.050	--	--	--	--	0.15 - 0.65um	0.70 - 0.80
COPPER (SEE NOTE 11)	0.81-0.86 (0.85 DRILL)	0.025 - 0.050	--	--	--	--	--	0.70 - 0.80
GOLD	0.81-0.86 (0.85 DRILL)	0.025 - 0.050	--	0.003 - 0.007	FLASH UP TO 0.0002	--	--	0.69 - 0.80

NOTES:

1. CONNECTOR MATERIALS:
   HOUSING: HIGH TEMPERATURE THERMOPLASTIC, BLACK
   UL 94V-0 COMPLIANT
   CONTACT: HIGH PERFORMANCE COPPER ALLOY
2. "LF" SUFFIX DENOTES "LEAD-FREE"
3. PRODUCT SPECIFICATION: GS-12-220
4. APPLICATION SPECIFICATION: GS-20-023
5. PRODUCT MARKING (PRODUCT NUMBER & LOT CODE) ON HOUSING.
6. MINIMUM NOMINAL PCB THICKNESS: 1.6mm
7. REFER TO CUSTOMER DRAWING SK100359II FOR INFORMATION REGARDING PCB LAYOUT OF POWER AND GUIDE MODULES RELATIVE TO SIGNAL MODULES.
8. PRODUCT MEETS EUROPEAN UNION DIRECTIVES AND OTHER COUNTRY REGULATIONS AS DESCRIBED IN FCI SPECIFICATION GS-22-008.
9. PACKAGING MEETS FCI SPECIFICATION GS-14-920.
10. HOUSING COMPONENT WILL WITHSTAND EXPOSURE TO 260°C PEAK TEMPERATURE FOR 60 SECONDS IN A CONVECTION, INFRA-RED, OR VAPOR PHASE REFLOW OVEN.
11. COPPER PLATING THICKNESS IN CENTER OF VIA HOLE CAN BE NO MORE THAN 0.003 LESS THAN OTHER AREAS.

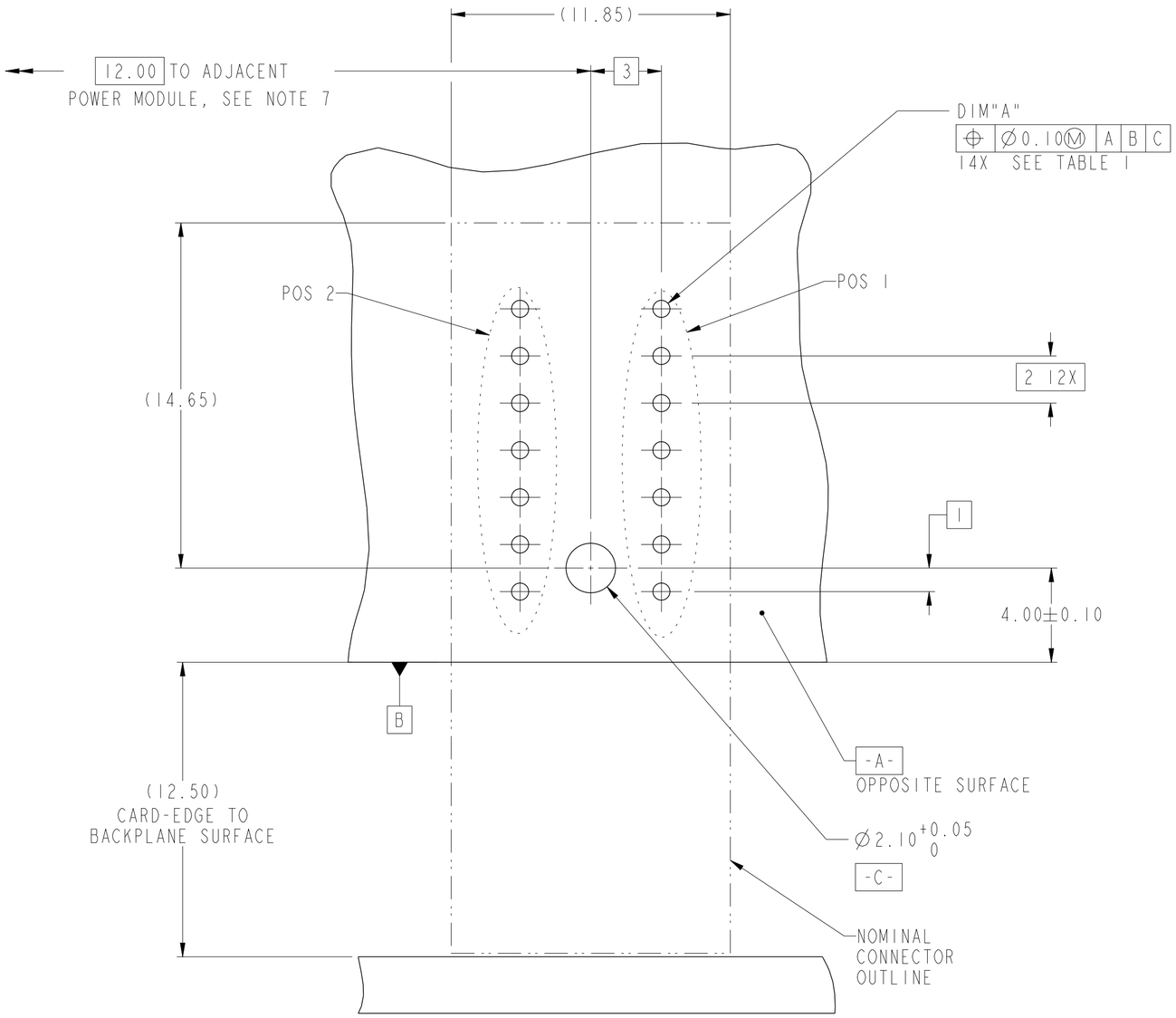

RECOMMENDED PCB LAYOUT, COMPONENT SIDE
SEE NOTE 6
SCALE 6:1

spec ref GS-12-220	dr Chen-Hong Tan 2005/08/04	projection	MM	size A2	scale 1:1
tolerance std ASME Y14.5 -	TOLERANCES UNLESS OTHERWISE SPECIFIED	eng Terry Luo 2019/04/23			ecn no ELX-DG-33324-1
		chr - -			
		appr Heaven Cen 2019/04/25	product family -		rel level Released
surface - ASME Y14.5	linear 0.X ±.3; 0.XX ±.10; 0.XXX ±.050; angular 0° ±2°	Amphenol FCi	title R/A HEADER ASSY 1X2 AIRMAX POWER	dwg no 10028918	rev H
			cat. no. -	Product - Customer Drw	sheet 2 of 2

© 2016 AFCI

Downloaded from Arrow.com.