Connection Diagram: Die

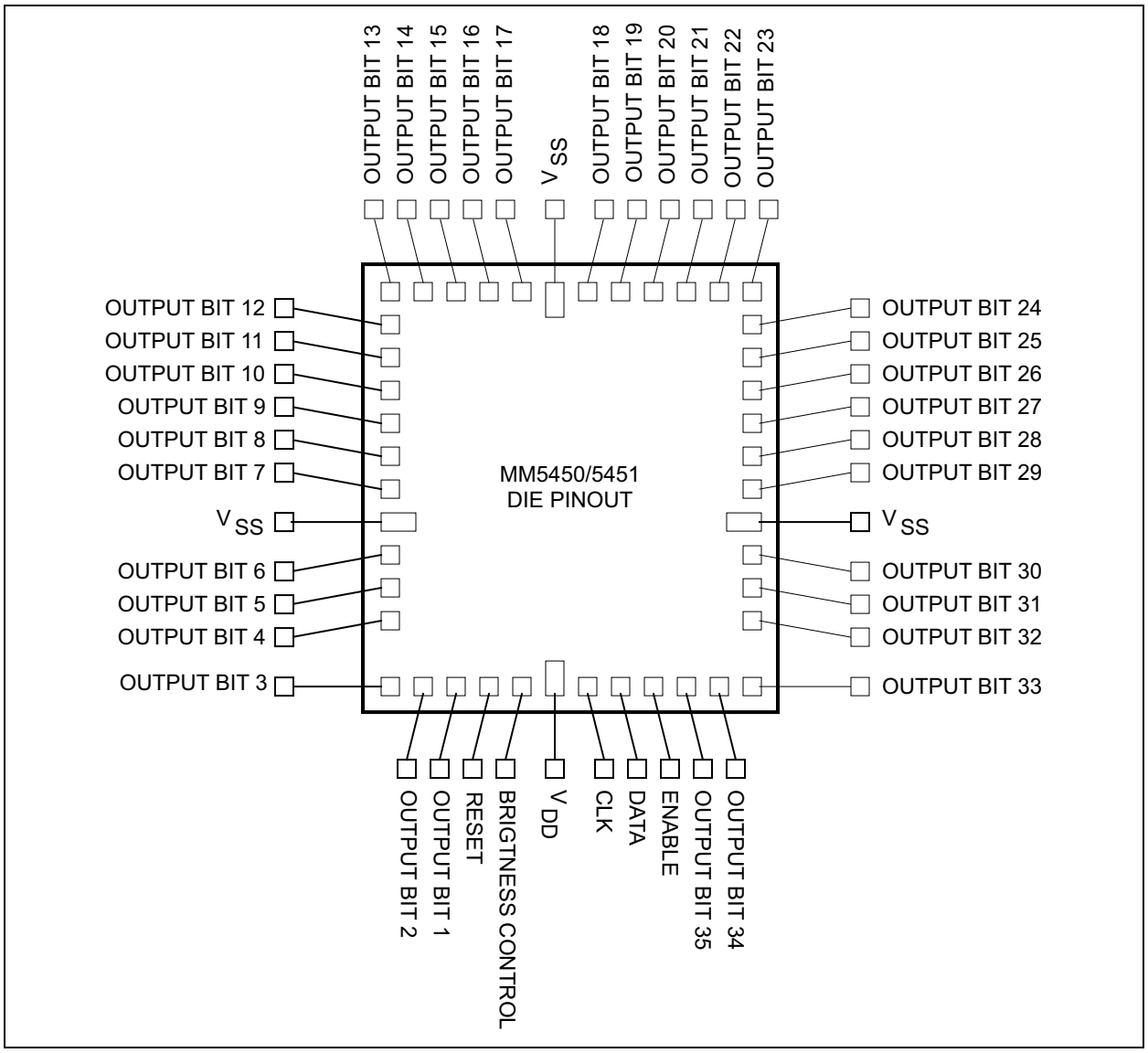

© 2016 Microchip Technology Inc.

Downloaded from Arrow.com.

Connection Diagram: Dual-Inline Package (DIP)

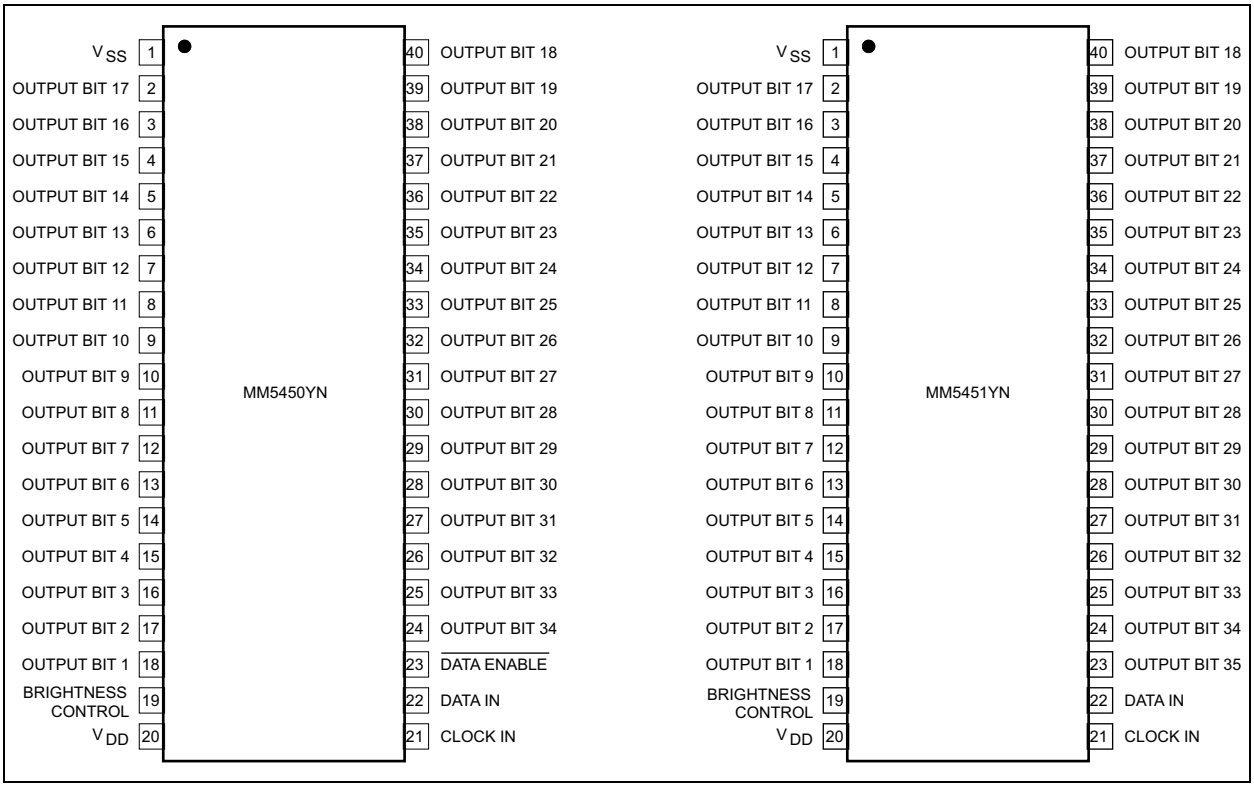

Connection Diagram: Plastic-Leaded Chip Carrier (PLCC)

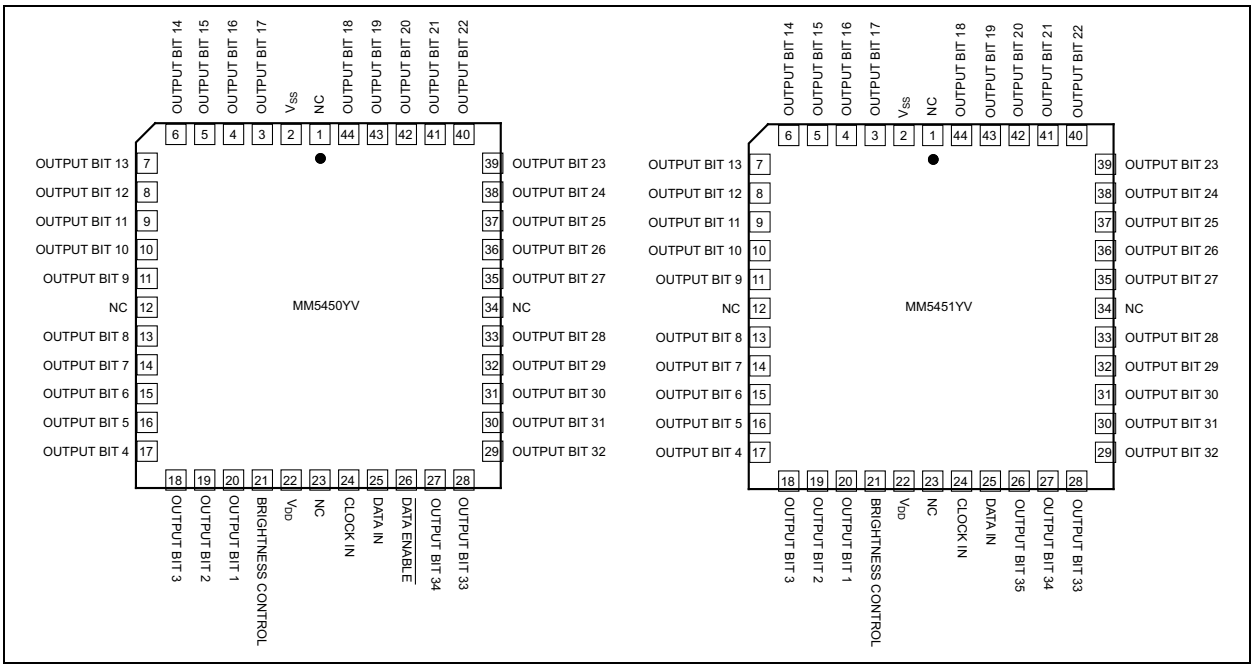

Downloaded from Arrow.com.

1.0 ELECTRICAL CHARACTERISTICS

Absolute Maximum Ratings †

Voltage (Any Pin) ..... V_{SS} to V_{SS} + 12V
Power Dissipation (+25°C) 1W
Power Dissipation (+85°C) ..... 560 mW

Operating Ratings ‡

Supply Voltage (V_{DD} – V_{SS}) ..... +4.75V to +11V

† **Notice:** Stresses above those listed under "Absolute Maximum Ratings" may cause permanent damage to the device. This is a stress rating only and functional operation of the device at those or any other conditions above those indicated in the operational sections of this specification is not intended. Exposure to maximum rating conditions for extended periods may affect device reliability.

‡ **Notice:** The device is not guaranteed to function outside its operating ratings.

© 2016 Microchip Technology Inc.

Downloaded from Arrow.com.

TABLE 1-1: ELECTRICAL CHARACTERISTICS

Electrical Characteristics: 4.5V ≤ V_{DD} ≤ 11V, V_{SS} = 0V; T_A = 25°C, **bold** values valid for –40°C ≤ T_A ≤ +85°C, unless otherwise noted.

Parameter	Symbol	Min.	Typ.	Max.	Units	Conditions
Power Supply Current	—	—	—	**8.5**	mA	–25°C to +85°C, excluding output loads
		—	—	**10**		–40°C to +85°C, excluding output loads
Data Input Voltage	V_L	**–0.3**	—	**0.8**	V	Logic-0 level, ±10 µA input bias
	V_H	**2.2**	—	**V_{DD}**		Logic-1 level, 4.75V ≤ V_{DD} ≤ 5.25V
	—	**V_{DD} – 2**	—	**V_{DD}**		V_{DD} > 5.25V
Brightness Control Input Current	—	**0**	—	**0.75**	mA	Note 1
Output Sink Current	—	—	—	**10**	µA	Segment off, V_{OUT} = 3.0V
		0	—	**10**		Segment on, V_{OUT} = 1.8V, Note 2; Brightness input = 0 µA
		2.0	2.7	**4**	mA	Segment on, V_{OUT} = 1.8V, Note 2; Brightness input = 100 µA
		15	—	**25**		Segment on, V_{OUT} = 1.8V, Note 2; Brightness input = 750 µA
Brightness Control Input Voltage	—	**3.0**	—	**4.3**	V	Input current = 750 µA
Output Matching	—	—	—	**±20**	%	Note 3, Note 4
Clock Input Frequency	f_C	—	—	**500**	kHz	Note 5, Note 6
Clock Input High Time	t_H	**950**	—	—	ns	Note 5, Note 6
Clock Input Low Time	t_L	**950**	—	—	ns	Note 5, Note 6
Data Input Setup Time	t_{DS}	**300**	—	—	ns	—
Data Input Hold Setup Time	t_{DH}	**300**	—	—	ns	—
Data Enable Input Setup Time	t_{DES}	**100**	—	—	ns	—
Reset Pad Current	—	**–8**	—	8	µA	Die.

Note 1: With a fixed resistor on the brightness input pin, some variation in brightness will occur among devices.

2: See Figure 2-1, Figure 2-2, and Figure 2-3 for recommended operating conditions and limits. Absolute maximum for each output should be limited to 40 mA.

3: Output matching is calculated as the percent variation of (I_{MAX} + I_{MIN}) / 2.

4: V_{OUT} should be regulated by user. See Figure 2-2 and Figure 2-3 for allowable V_{OUT} vs. I_{OUT} operation.

5: AC input waveform specification for test purpose: t_R ≤ 200 ns, t_F ≤ 20 ns, f = 500 kHz, 50% ±10% duty cycle.

6: Clock input rise and fall times must not exceed 300 ns.

Downloaded from Arrow.com.

TEMPERATURE SPECIFICATIONS (Note 1)

Parameters	Sym.	Min.	Typ.	Max.	Units	Conditions
Temperature Ranges						
Ambient Temperature Range	T_A	–40	—	+85	°C	—
Storage Temperature Range	T_S	–65	—	+150	°C	—
Junction Temperature	T_J	—	—	+150	°C	—
Lead Temperature	—	—	—	+300	°C	—

Note 1: The maximum allowable power dissipation is a function of ambient temperature, the maximum allowable junction temperature and the thermal resistance from junction to air (i.e., T_A, T_J, θ_{JA}). Exceeding the maximum allowable power dissipation will cause the device operating junction temperature to exceed the maximum +125°C rating. Sustained junction temperatures above +125°C can impact the device reliability.

© 2016 Microchip Technology Inc.

Downloaded from Arrow.com.

2.0 TYPICAL PERFORMANCE CURVES

Note: The graphs and tables provided following this note are a statistical summary based on a limited number of samples and are provided for informational purposes only. The performance characteristics listed herein are not tested or guaranteed. In some graphs or tables, the data presented may be outside the specified operating range (e.g., outside specified power supply range) and therefore outside the warranted range.

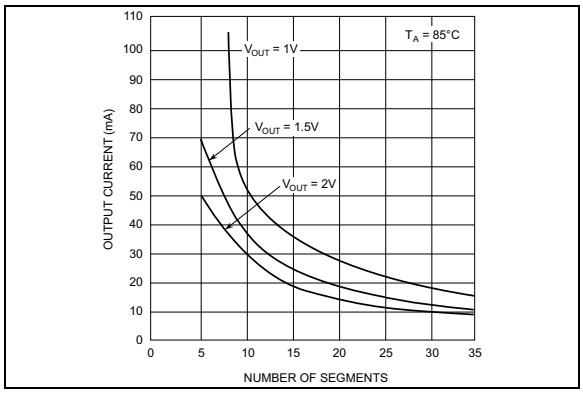

FIGURE 2-1: *Output Current vs. Number of Segments.*

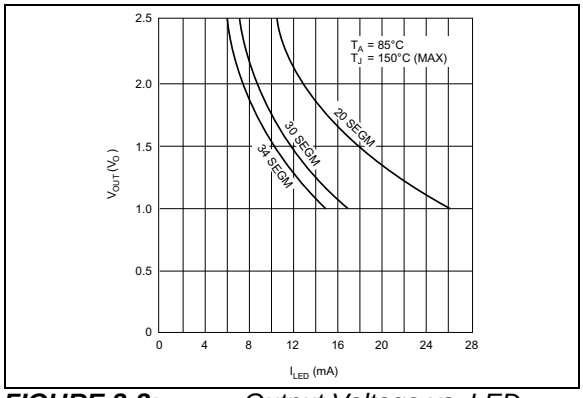

FIGURE 2-2: *Output Voltage vs. LED Current.*

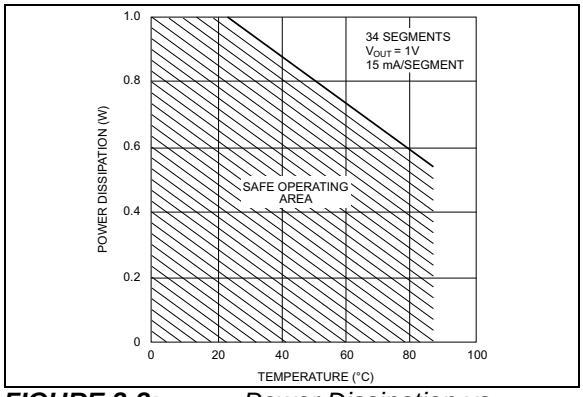

FIGURE 2-3: *Power Dissipation vs. Temperature.*

Downloaded from Arrow.com.

3.0 FUNCTIONAL DESCRIPTION

The MM5450 and MM5451 are designed to drive either 4- or 5-digit alphanumeric LED displays with the added benefit of requiring minimal interface with the display or data source.

Data is transferred serially via two signals: clock and serial data. Data transfer without the added inconvenience of an external load signal is accomplished by using a format of a leading “1” followed by the allowed 35 data bits. These 35 data bits are latched after the 36th has been transferred. This scheme provides non-multiplexed, direct drive to the LED display. Characters currently displayed (thus, data output) changes only if the serial data bits differ from those previously transferred.

Control of the output current for LED displays provides for the display brightness. To prevent oscillations, a 1 nF capacitor should be connected to pin 19, brightness control.

The Block Diagram is shown on page 1. For the MIC5450, the /DATA ENABLE is a metal option and is used instead of the 35th output. The output current is typically 20-times greater than the current into pin 19, which is set by an external variable resistor.

There is an external reset connection shown which is available on unpackaged (die) only. Connection Diagram: Die illustrates the die pad locations for bonding in “chip on board” applications.

Figure 3-1 shows the input data format. A leading “1” is followed by 35 bits of data. After the 36th had been transferred, a LOAD signal is generated synchronously with the clock high state. This loads the 35 bits of data into the latches. The low side of the clock is used to generate a RESET signal which clears all shift registers for the next set of data. All shift registers are static master-slave, with no clear for the master portion of the first register, allowing continuous operation.

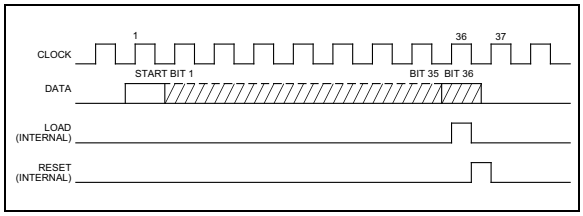

FIGURE 3-1: *Input Data Format.*

There must be a complete set of 36 clocks or the shift registers will not clear.

When the chip first powers ON, an internal power ON reset signal is generated that resets all registers and all latches. The START bit and the first clock return the chip to its normal operation.

The Connection Diagram: Dual-Inline Package (DIP) and Connection Diagram: Plastic-Leaded Chip Carrier (PLCC) show the pinout of the MIC5450 and MIC5451. Bit 1 is the first bit following the start bit and it will appear on pin 18. A logical “1” at the input will turn on the appropriate LED.

Figure 3-2 shows the timing relationships between data, clock and /DATA ENABLE. A maximum clock frequency of 0.5 MHz is assumed.

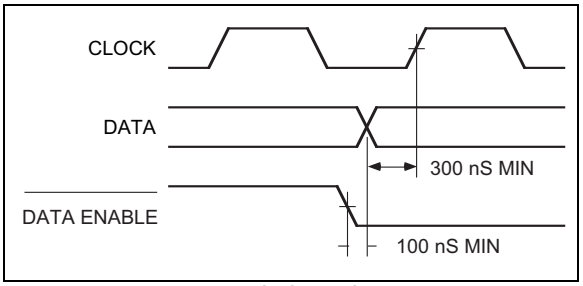

FIGURE 3-2: *Timing Diagram.*

For applications where a lesser number of outputs is used, it is possible to either increase the current per output, or operate the part at higher than 1V V_{OUT}. The following equation can be used for calculations.

EQUATION 3-1:

$$T_J = V_{OUT} \times I_{LED} \times No \text{ of segments} \times 124^{o}C/\text{W} + T_A$$

Where:

T_J	Junction Temperature (+150°C max.)
V_{OUT}	Voltage at the LED driver outputs
I_{LED}	LED current
124°C/W	Thermal resistance of the package
T_A	Ambient temperature

Equation 3-1 is used to plot Figure 2-1, Figure 2-2, and Figure 2-3.

© 2016 Microchip Technology Inc.

Downloaded from Arrow.com.

4.0 TYPICAL APPLICATIONS

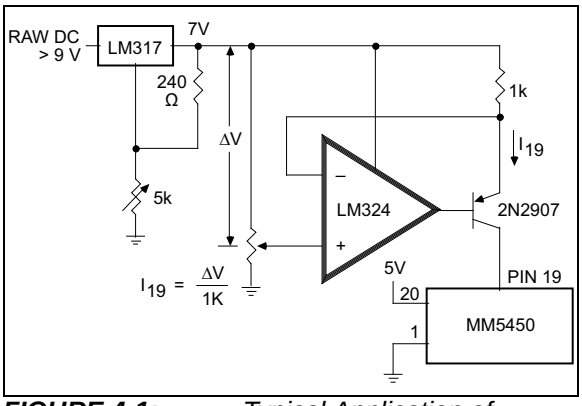

FIGURE 4-1: *Typical Application of Constant Current Brightness Control.*

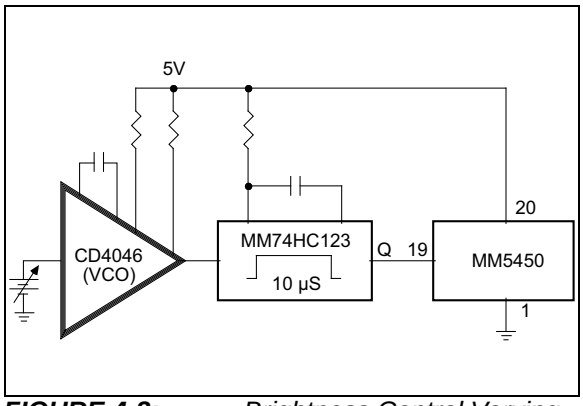

FIGURE 4-2: *Brightness Control Varying the Duty Cycle.*

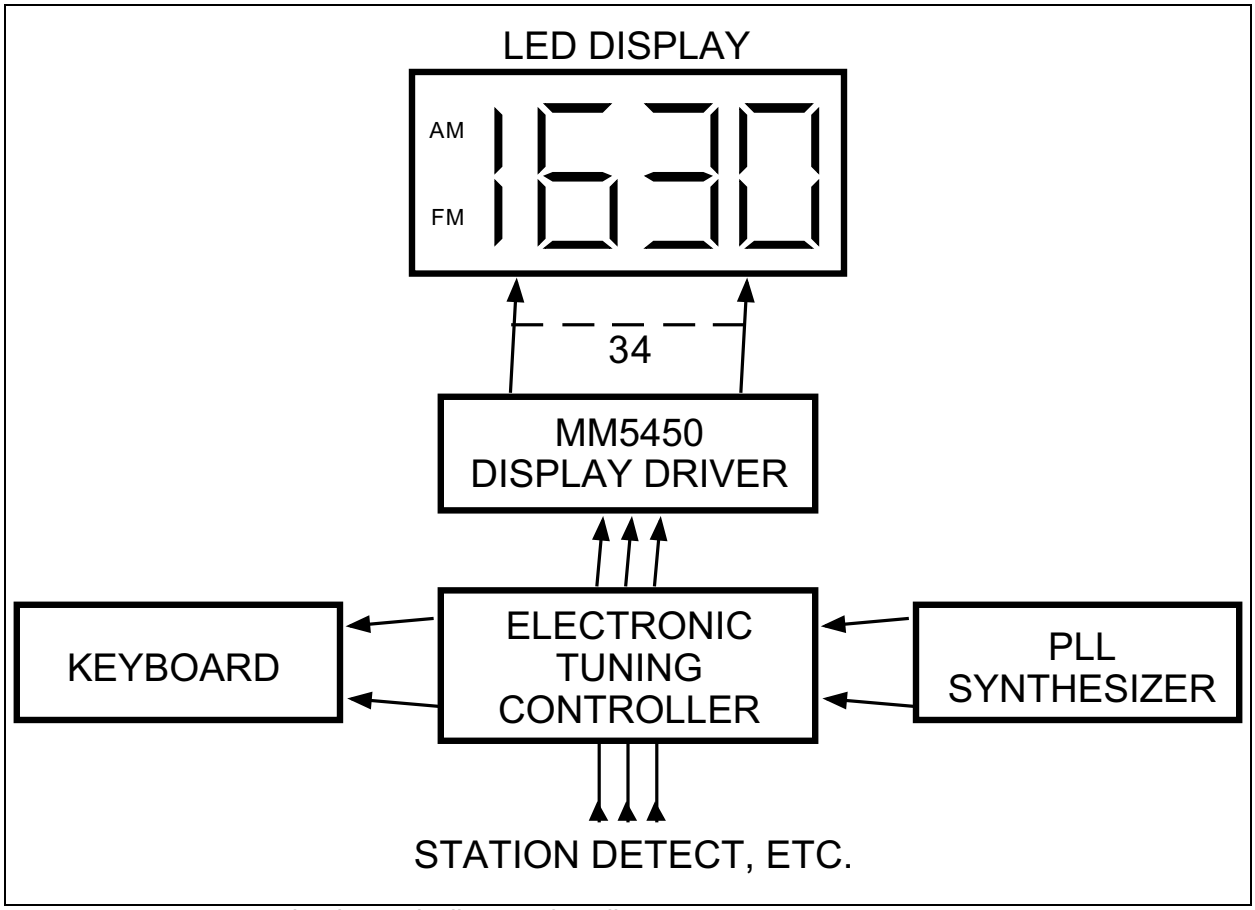

FIGURE 4-3: *Basic Electronically Tuned Radio System.*

Downloaded from Arrow.com.

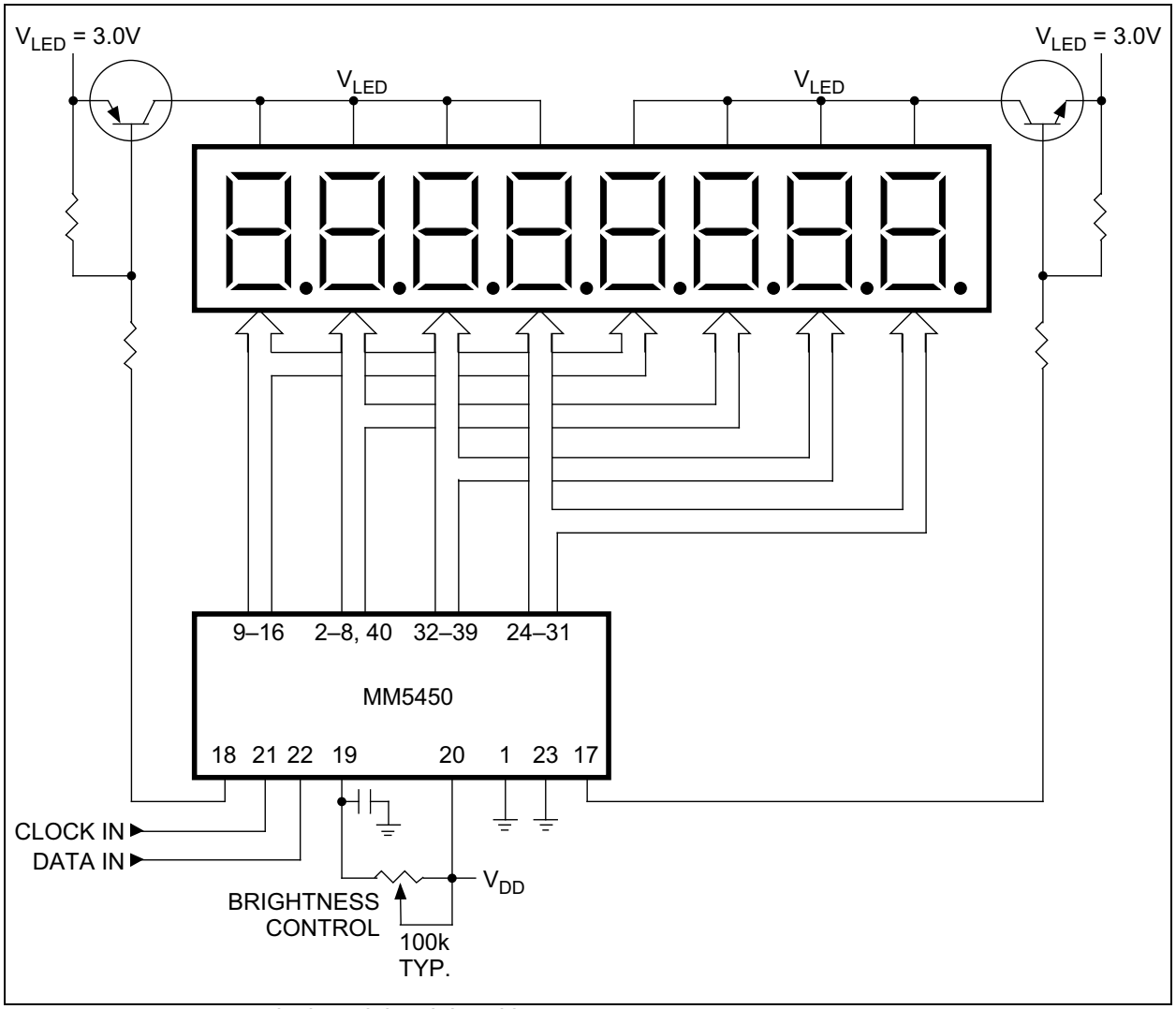

FIGURE 4-4: *Duplexing Eight Digits with One MM5450.*

© 2016 Microchip Technology Inc.

Downloaded from Arrow.com.

5.0 PACKAGING INFORMATION

5.1 Package Marking Information

40-Pin PDIP*

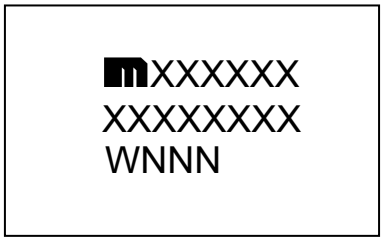

Example

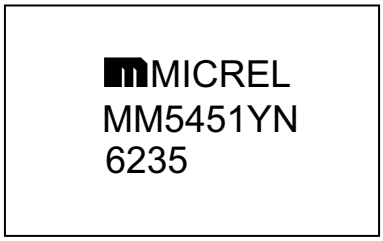

44-Pin PLCC*

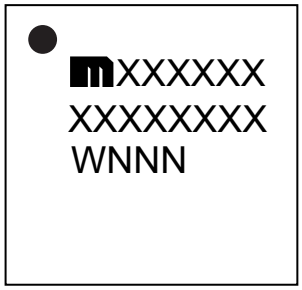

Example

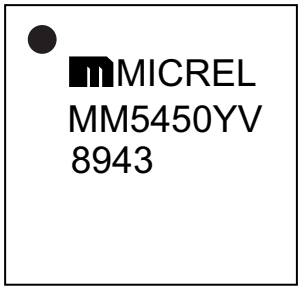

Legend:	XX...X	Product code or customer-specific information
	Y	Year code (last digit of calendar year)
	YY	Year code (last 2 digits of calendar year)
	WW	Week code (week of January 1 is week ‘01’)
	NNN	Alphanumeric traceability code
	(e3)	Pb-free JEDEC® designator for Matte Tin (Sn)
	*	This package is Pb-free. The Pb-free JEDEC designator ((e3)) can be found on the outer packaging for this package.
	●, ▲, ▼	Pin one index is identified by a dot, delta up, or delta down (triangle mark).
Note:	In the event the full Microchip part number cannot be marked on one line, it will be carried over to the next line, thus limiting the number of available characters for customer-specific information. Package may or may not include the corporate logo.	
	Underbar (_) and/or Overbar (¯) symbol may not be to scale.	

Downloaded from Arrow.com.

40-Lead PDIP Package Outline and Recommended Land Pattern

TITLE
40 LEAD PDIP PACKAGE OUTLINE & RECOMMENDED LAND PATTERN

DRAWING #	PDIP-40LD-PL-1	**UNIT**	INCH
Lead Frame	Copper	**Lead Finish**	Matte Tin

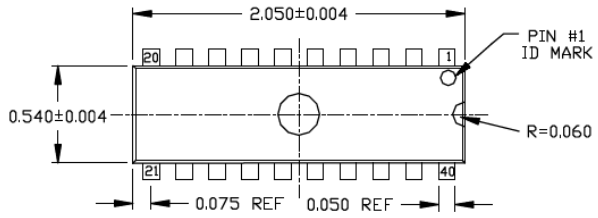

TOP VIEW

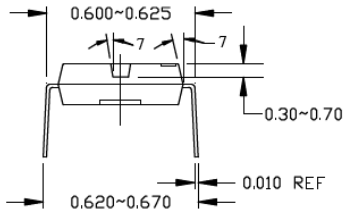

END VIEW

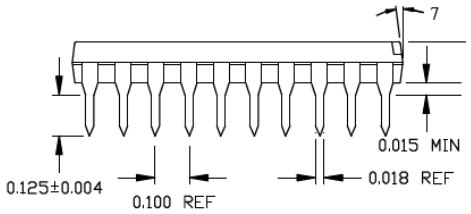

SIDE VIEW

1. SPADE WIDTH, LEAD WIDTH AND LEAD THICKNESS EXCLUSIVE OF TIN PLATING OR SOLDER PLATING/ DIPPING THICKNESS.
2. PACKAGE OUTLINE EXCLUSIVE OF ANY MOLD FLASHES.
3. PACKAGE OUTLINE EXCLUSIVE OF BURR DIMENSION.

Note: For the most current package drawings, please see the Microchip Packaging Specification located at http://www.microchip.com/packaging.

© 2016 Microchip Technology Inc.

Downloaded from Arrow.com.

44-Lead PLCC Package Outline and Recommended Land Pattern

TITLE
44 LEAD PLCC PACKAGE OUTLINE & RECOMMENDED LAND PATTERN

DRAWING #	PLCC-44LD-PL-1	**UNIT**	INCH
Lead Frame	Copper	**Lead Finish**	Matte Tin

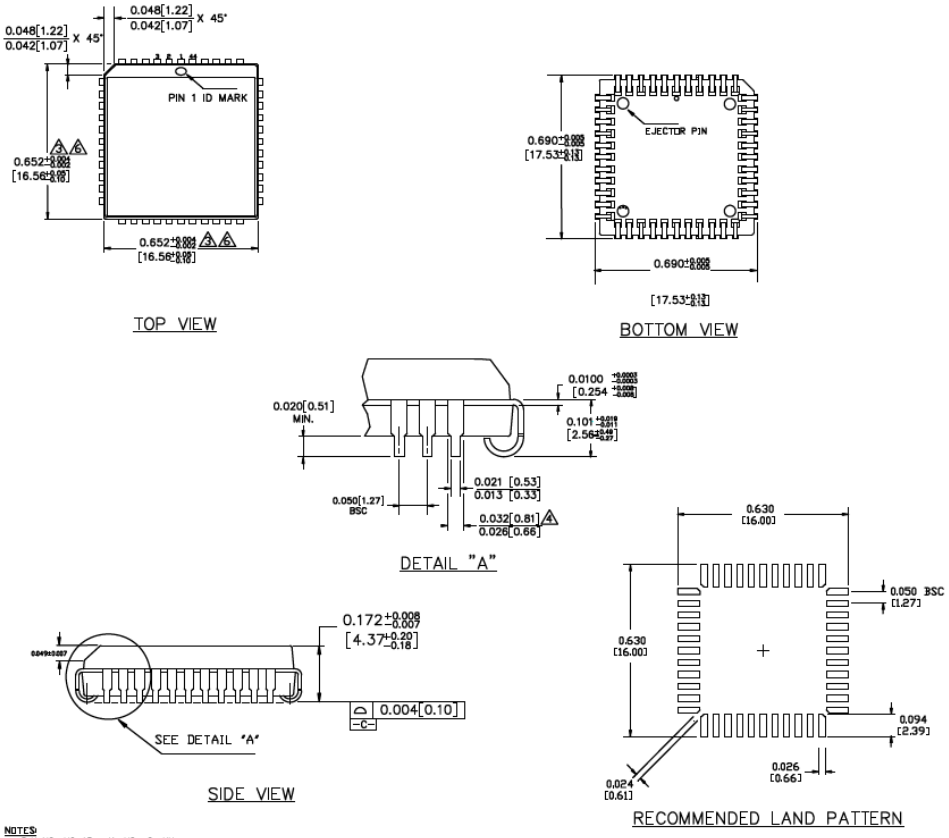

NOTES:
1. DIMENSIONS ARE IN INCHES [MM]
2. CONTROLLING DIMENSION: INCHES
3. DIMENSION DOES NOT INCLUDE MOLD FLASH OR PROTRUSIONS, EITHER OF WHICH SHALL NOT EXCEED 0.008 [0.203]
4. LEAD DIMENSION DOES NOT INCLUDE DAMBAR PROTRUSION.
5. MAXIMUM AND MINIMUM SPECIFICATIONS ARE INDICATED AS FOLLOWS: MAX/MIN.
6. PACKAGE TOP DIMENSION MAY BE SLIGHTLY SMALLER THAN BOTTOM DIMENSION.
7. EJECTOR PIN COUNT WILL EITHER BE TWO OR FOUR PINS.

Note: For the most current package drawings, please see the Microchip Packaging Specification located at http://www.microchip.com/packaging.

Downloaded from Arrow.com.

NOTES:

© 2016 Microchip Technology Inc.

Downloaded from Arrow.com.

APPENDIX A: REVISION HISTORY

Revision A (October 2016)

- Converted Micrel document MM5450/51 to Microchip data sheet DS20005651A.
- Minor text changes throughout.
- Corrected Pin 26 of the MM5451YV in Connection Diagram: Plastic-Leaded Chip Carrier (PLCC) to read Output Bit 35.
- Corrected the minimum value for Reset Pad Current in Table 1-1 to be –8 µA.

© 2016 Microchip Technology Inc.

Downloaded from Arrow.com.

NOTES:

© 2016 Microchip Technology Inc.

Downloaded from Arrow.com.

PRODUCT IDENTIFICATION SYSTEM

To order or obtain information, e.g., on pricing or delivery, contact your local Microchip representative or sales office.

PART NO.	X	XX	-	XX
Device	Junction Temperature Range	Package		Media Type

Device:	MM5450:	LED Display Driver (with Enable)
	MM5451:	LED Display Driver
Junction Temperature Range:	Y =	–40°C to +85°C
Package:	N =	40-Lead PDIP
	V =	44-Lead PLCC
Media Type:	TR =	500/Reel for V Package
	(blank)=	9/Tube for N Package
	(blank)=	26/Tube for V Package

Examples:

a) MM5450YN: LED Display Driver with Enable –40°C to +85°C Junction Temperature Range, 40-Lead PDIP, 9/Tube

b) MM5450YV: LED Display Driver with Enable –40°C to +85°C Junction Temperature Range, 44-Lead PLCC, 26/Tube

c) MM5450YV-TR: LED Display Driver with Enable –40°C to +85°C Junction Temperature Range, 44-Lead PLCC, 500/Reel

a) MM5451YN: LED Display Driver –40°C to +85°C Junction Temperature Range, 40-Lead PDIP, 9/Tube

b) MM5451YV: LED Display Driver –40°C to +85°C Junction Temperature Range, 44-Lead PLCC, 26/Tube

c) MM5451YV-TR: LED Display Driver –40°C to +85°C Junction Temperature Range, 44-Lead PLCC, 500/Reel

Note 1: Tape and Reel identifier only appears in the catalog part number description. This identifier is used for ordering purposes and is not printed on the device package. Check with your Microchip Sales Office for package availability with the Tape and Reel option.

Downloaded from Arrow.com.

NOTES:

© 2016 Microchip Technology Inc.

Downloaded from Arrow.com.

Note the following details of the code protection feature on Microchip devices:

- Microchip products meet the specification contained in their particular Microchip Data Sheet.
- Microchip believes that its family of products is one of the most secure families of its kind on the market today, when used in the intended manner and under normal conditions.
- There are dishonest and possibly illegal methods used to breach the code protection feature. All of these methods, to our knowledge, require using the Microchip products in a manner outside the operating specifications contained in Microchip's Data Sheets. Most likely, the person doing so is engaged in theft of intellectual property.
- Microchip is willing to work with the customer who is concerned about the integrity of their code.
- Neither Microchip nor any other semiconductor manufacturer can guarantee the security of their code. Code protection does not mean that we are guaranteeing the product as "unbreakable."

Code protection is constantly evolving. We at Microchip are committed to continuously improving the code protection features of our products. Attempts to break Microchip's code protection feature may be a violation of the Digital Millennium Copyright Act. If such acts allow unauthorized access to your software or other copyrighted work, you may have a right to sue for relief under that Act.

Information contained in this publication regarding device applications and the like is provided only for your convenience and may be superseded by updates. It is your responsibility to ensure that your application meets with your specifications. MICROCHIP MAKES NO REPRESENTATIONS OR WARRANTIES OF ANY KIND WHETHER EXPRESS OR IMPLIED, WRITTEN OR ORAL, STATUTORY OR OTHERWISE, RELATED TO THE INFORMATION, INCLUDING BUT NOT LIMITED TO ITS CONDITION, QUALITY, PERFORMANCE, MERCHANTABILITY OR FITNESS FOR PURPOSE**.** Microchip disclaims all liability arising from this information and its use. Use of Microchip devices in life support and/or safety applications is entirely at the buyer's risk, and the buyer agrees to defend, indemnify and hold harmless Microchip from any and all damages, claims, suits, or expenses resulting from such use. No licenses are conveyed, implicitly or otherwise, under any Microchip intellectual property rights unless otherwise stated.

Microchip received ISO/TS-16949:2009 certification for its worldwide headquarters, design and wafer fabrication facilities in Chandler and Tempe, Arizona; Gresham, Oregon and design centers in California and India. The Company's quality system processes and procedures are for its PIC® MCUs and dsPIC® DSCs, KEELOQ® code hopping devices, Serial EEPROMs, microperipherals, nonvolatile memory and analog products. In addition, Microchip's quality system for the design and manufacture of development systems is ISO 9001:2000 certified.

QUALITY MANAGEMENT SYSTEM
CERTIFIED BY DNV
═ ISO/TS 16949 ═

Trademarks

The Microchip name and logo, the Microchip logo, AnyRate, dsPIC, FlashFlex, flexPWR, Heldo, JukeBlox, KeeLoq, KeeLoq logo, Kleer, LANCheck, LINK MD, MediaLB, MOST, MOST logo, MPLAB, OptoLyzer, PIC, PICSTART, PIC32 logo, RightTouch, SpyNIC, SST, SST Logo, SuperFlash and UNI/O are registered trademarks of Microchip Technology Incorporated in the U.S.A. and other countries.

ClockWorks, The Embedded Control Solutions Company, ETHERSYNCH, Hyper Speed Control, HyperLight Load, IntelliMOS, mTouch, Precision Edge, and QUIET-WIRE are registered trademarks of Microchip Technology Incorporated in the U.S.A.

Analog-for-the-Digital Age, Any Capacitor, AnyIn, AnyOut, BodyCom, chipKIT, chipKIT logo, CodeGuard, dsPICDEM, dsPICDEM.net, Dynamic Average Matching, DAM, ECAN, EtherGREEN, In-Circuit Serial Programming, ICSP, Inter-Chip Connectivity, JitterBlocker, KleerNet, KleerNet logo, MiWi, motorBench, MPASM, MPF, MPLAB Certified logo, MPLIB, MPLINK, MultiTRAK, NetDetach, Omniscient Code Generation, PICDEM, PICDEM.net, PICkit, PICtail, PureSilicon, RightTouch logo, REAL ICE, Ripple Blocker, Serial Quad I/O, SQI, SuperSwitcher, SuperSwitcher II, Total Endurance, TSHARC, USBCheck, VariSense, ViewSpan, WiperLock, Wireless DNA, and ZENA are trademarks of Microchip Technology Incorporated in the U.S.A. and other countries.

SQTP is a service mark of Microchip Technology Incorporated in the U.S.A.

Silicon Storage Technology is a registered trademark of Microchip Technology Inc. in other countries.

GestIC is a registered trademarks of Microchip Technology Germany II GmbH & Co. KG, a subsidiary of Microchip Technology Inc., in other countries.

All other trademarks mentioned herein are property of their respective companies.

© 2016, Microchip Technology Incorporated, Printed in the U.S.A., All Rights Reserved.

ISBN: 978-1-5224-1052-2

Downloaded from Arrow.com.

Worldwide Sales and Service

AMERICAS

Corporate Office
2355 West Chandler Blvd.
Chandler, AZ 85224-6199
Tel: 480-792-7200
Fax: 480-792-7277
Technical Support:
http://www.microchip.com/support
Web Address:
www.microchip.com

Atlanta
Duluth, GA
Tel: 678-957-9614
Fax: 678-957-1455

Austin, TX
Tel: 512-257-3370

Boston
Westborough, MA
Tel: 774-760-0087
Fax: 774-760-0088

Chicago
Itasca, IL
Tel: 630-285-0071
Fax: 630-285-0075

Cleveland
Independence, OH
Tel: 216-447-0464
Fax: 216-447-0643

Dallas
Addison, TX
Tel: 972-818-7423
Fax: 972-818-2924

Detroit
Novi, MI
Tel: 248-848-4000

Houston, TX
Tel: 281-894-5983

Indianapolis
Noblesville, IN
Tel: 317-773-8323
Fax: 317-773-5453

Los Angeles
Mission Viejo, CA
Tel: 949-462-9523
Fax: 949-462-9608

New York, NY
Tel: 631-435-6000

San Jose, CA
Tel: 408-735-9110

Canada - Toronto
Tel: 905-695-1980
Fax: 905-695-2078

ASIA/PACIFIC

Asia Pacific Office
Suites 3707-14, 37th Floor
Tower 6, The Gateway
Harbour City, Kowloon

Hong Kong
Tel: 852-2943-5100
Fax: 852-2401-3431

Australia - Sydney
Tel: 61-2-9868-6733
Fax: 61-2-9868-6755

China - Beijing
Tel: 86-10-8569-7000
Fax: 86-10-8528-2104

China - Chengdu
Tel: 86-28-8665-5511
Fax: 86-28-8665-7889

China - Chongqing
Tel: 86-23-8980-9588
Fax: 86-23-8980-9500

China - Dongguan
Tel: 86-769-8702-9880

China - Guangzhou
Tel: 86-20-8755-8029

China - Hangzhou
Tel: 86-571-8792-8115
Fax: 86-571-8792-8116

China - Hong Kong SAR
Tel: 852-2943-5100
Fax: 852-2401-3431

China - Nanjing
Tel: 86-25-8473-2460
Fax: 86-25-8473-2470

China - Qingdao
Tel: 86-532-8502-7355
Fax: 86-532-8502-7205

China - Shanghai
Tel: 86-21-5407-5533
Fax: 86-21-5407-5066

China - Shenyang
Tel: 86-24-2334-2829
Fax: 86-24-2334-2393

China - Shenzhen
Tel: 86-755-8864-2200
Fax: 86-755-8203-1760

China - Wuhan
Tel: 86-27-5980-5300
Fax: 86-27-5980-5118

China - Xian
Tel: 86-29-8833-7252
Fax: 86-29-8833-7256

ASIA/PACIFIC

China - Xiamen
Tel: 86-592-2388138
Fax: 86-592-2388130

China - Zhuhai
Tel: 86-756-3210040
Fax: 86-756-3210049

India - Bangalore
Tel: 91-80-3090-4444
Fax: 91-80-3090-4123

India - New Delhi
Tel: 91-11-4160-8631
Fax: 91-11-4160-8632

India - Pune
Tel: 91-20-3019-1500

Japan - Osaka
Tel: 81-6-6152-7160
Fax: 81-6-6152-9310

Japan - Tokyo
Tel: 81-3-6880- 3770
Fax: 81-3-6880-3771

Korea - Daegu
Tel: 82-53-744-4301
Fax: 82-53-744-4302

Korea - Seoul
Tel: 82-2-554-7200
Fax: 82-2-558-5932 or
82-2-558-5934

Malaysia - Kuala Lumpur
Tel: 60-3-6201-9857
Fax: 60-3-6201-9859

Malaysia - Penang
Tel: 60-4-227-8870
Fax: 60-4-227-4068

Philippines - Manila
Tel: 63-2-634-9065
Fax: 63-2-634-9069

Singapore
Tel: 65-6334-8870
Fax: 65-6334-8850

Taiwan - Hsin Chu
Tel: 886-3-5778-366
Fax: 886-3-5770-955

Taiwan - Kaohsiung
Tel: 886-7-213-7828

Taiwan - Taipei
Tel: 886-2-2508-8600
Fax: 886-2-2508-0102

Thailand - Bangkok
Tel: 66-2-694-1351
Fax: 66-2-694-1350

EUROPE

Austria - Wels
Tel: 43-7242-2244-39
Fax: 43-7242-2244-393

Denmark - Copenhagen
Tel: 45-4450-2828
Fax: 45-4485-2829

France - Paris
Tel: 33-1-69-53-63-20
Fax: 33-1-69-30-90-79

Germany - Dusseldorf
Tel: 49-2129-3766400

Germany - Karlsruhe
Tel: 49-721-625370

Germany - Munich
Tel: 49-89-627-144-0
Fax: 49-89-627-144-44

Italy - Milan
Tel: 39-0331-742611
Fax: 39-0331-466781

Italy - Venice
Tel: 39-049-7625286

Netherlands - Drunen
Tel: 31-416-690399
Fax: 31-416-690340

Poland - Warsaw
Tel: 48-22-3325737

Spain - Madrid
Tel: 34-91-708-08-90
Fax: 34-91-708-08-91

Sweden - Stockholm
Tel: 46-8-5090-4654

UK - Wokingham
Tel: 44-118-921-5800
Fax: 44-118-921-5820

06/23/16

© 2016 Microchip Technology Inc.

Downloaded from Arrow.com.