Note the following details of the code protection feature on Microchip devices:

- Microchip products meet the specification contained in their particular Microchip Data Sheet.
- Microchip believes that its family of products is one of the most secure families of its kind on the market today, when used in the intended manner and under normal conditions.
- There are dishonest and possibly illegal methods used to breach the code protection feature. All of these methods, to our knowledge, require using the Microchip products in a manner outside the operating specifications contained in Microchip's Data Sheets. Most likely, the person doing so is engaged in theft of intellectual property.
- Microchip is willing to work with the customer who is concerned about the integrity of their code.
- Neither Microchip nor any other semiconductor manufacturer can guarantee the security of their code. Code protection does not mean that we are guaranteeing the product as "unbreakable."

Code protection is constantly evolving. We at Microchip are committed to continuously improving the code protection features of our products. Attempts to break Microchip's code protection feature may be a violation of the Digital Millennium Copyright Act. If such acts allow unauthorized access to your software or other copyrighted work, you may have a right to sue for relief under that Act.

Information contained in this publication regarding device applications and the like is provided only for your convenience and may be superseded by updates. It is your responsibility to ensure that your application meets with your specifications. MICROCHIP MAKES NO REPRESENTATIONS OR WARRANTIES OF ANY KIND WHETHER EXPRESS OR IMPLIED, WRITTEN OR ORAL, STATUTORY OR OTHERWISE, RELATED TO THE INFORMATION, INCLUDING BUT NOT LIMITED TO ITS CONDITION, QUALITY, PERFORMANCE, MERCHANTABILITY OR FITNESS FOR PURPOSE. Microchip disclaims all liability arising from this information and its use. Use of Microchip devices in life support and/or safety applications is entirely at the buyer's risk, and the buyer agrees to defend, indemnify and hold harmless Microchip from any and all damages, claims, suits, or expenses resulting from such use. No licenses are conveyed, implicitly or otherwise, under any Microchip intellectual property rights.

QUALITY MANAGEMENT SYSTEM
CERTIFIED BY DNV
ISO/TS 16949:2002

Trademarks

The Microchip name and logo, the Microchip logo, dsPIC, KEELOQ, KEELOQ logo, MPLAB, PIC, PICmicro, PICSTART, PIC32 logo, rfPIC and UNI/O are registered trademarks of Microchip Technology Incorporated in the U.S.A. and other countries.

FilterLab, Hampshire, HI-TECH C, Linear Active Thermistor, MXDEV, MXLAB, SEEVAL and The Embedded Control Solutions Company are registered trademarks of Microchip Technology Incorporated in the U.S.A.

Analog-for-the-Digital Age, Application Maestro, CodeGuard, dsPICDEM, dsPICDEM.net, dsPICworks, dsSPEAK, ECAN, ECONOMONITOR, FanSense, HI-TIDE, In-Circuit Serial Programming, ICSP, Mindi, MiWi, MPASM, MPLAB Certified logo, MPLIB, MPLINK, mTouch, Omniscient Code Generation, PICC, PICC-18, PICDEM, PICDEM.net, PICkit, PICtail, REAL ICE, rfLAB, Select Mode, Total Endurance, TSHARC, UniWinDriver, WiperLock and ZENA are trademarks of Microchip Technology Incorporated in the U.S.A. and other countries.

SQTP is a service mark of Microchip Technology Incorporated in the U.S.A.

All other trademarks mentioned herein are property of their respective companies.

© 2011, Microchip Technology Incorporated, Printed in the U.S.A., All Rights Reserved.

Printed on recycled paper.

ISBN: 978-1-60932-883-2

Microchip received ISO/TS-16949:2002 certification for its worldwide headquarters, design and wafer fabrication facilities in Chandler and Tempe, Arizona; Gresham, Oregon and design centers in California and India. The Company's quality system processes and procedures are for its PIC® MCUs and dsPIC® DSCs, KEELOQ® code hopping devices, Serial EEPROMs, microperipherals, nonvolatile memory and analog products. In addition, Microchip's quality system for the design and manufacture of development systems is ISO 9001:2000 certified.

© 2011 Microchip Technology Inc.

Downloaded from Arrow.com.

High-Performance, 16-bit Digital Signal Controllers

Note: This data sheet summarizes features of this group of dsPIC30F devices and is not intended to be a complete reference source. For more information on the CPU, peripherals, register descriptions and general device functionality, refer to the "*dsPIC30F Family Reference Manual*" (DS70046). For more information on the device instruction set and programming, refer to the *"16-bit MCU and DSC Programmer's Reference Manual"* (DS70157).

High-Performance Modified RISC CPU:

- Modified Harvard architecture
- C compiler optimized instruction set architecture
- Flexible addressing modes
- 83 base instructions
- 24-bit wide instructions, 16-bit wide data path
- Up to 144 Kbytes on-chip Flash program space
- Up to 48K instruction words
- Up to 8 Kbytes of on-chip data RAM
- Up to 4 Kbytes of nonvolatile data EEPROM
- 16 x 16-bit working register array
- Up to 30 MIPS operation:
  - DC to 40 MHz external clock input
  - 4 MHz-10 MHz oscillator input with PLL active (4x, 8x, 16x)
- Up to 41 interrupt sources:
  - Eight user-selectable priority levels
  - Five external interrupt sources
  - Four processor traps

DSP Features:

- Dual data fetch
- Modulo and Bit-Reversed modes
- Two 40-bit wide accumulators with optional saturation logic
- 17-bit x 17-bit single-cycle hardware fractional/integer multiplier
- All DSP instructions are single cycle:
  - Multiply-Accumulate (`MAC`) operation
- Single-cycle ±16 shift

Peripheral Features:

- High-current sink/source I/O pins: 25 mA/25 mA
- Five 16-bit timers/counters; optionally pair up 16-bit timers into 32-bit timer modules
- 16-bit Capture input functions
- 16-bit Compare/PWM output functions:
- Data Converter Interface (DCI) supports common audio Codec protocols, including I^2S and AC'97
- 3-wire SPI modules (supports four Frame modes)
- I^2C™ module supports Multi-Master/Slave mode and 7-bit/10-bit addressing
- Two addressable UART modules with FIFO buffers
- Two CAN bus modules compliant with CAN 2.0B standard

Analog Features:

- 12-bit Analog-to-Digital Converter (ADC) with:
  - 200 Ksps conversion rate
  - Up to 16 input channels
  - Conversion available during Sleep and Idle
- Programmable Low-Voltage Detection (PLVD)
- Programmable Brown-out Reset

Special Microcontroller Features:

- Enhanced Flash program memory:
  - 10,000 erase/write cycle (min.) for industrial temperature range, 100K (typical)
- Data EEPROM memory:
  - 100,000 erase/write cycle (min.) for industrial temperature range, 1M (typical)
- Self-reprogrammable under software control
- Power-on Reset (POR), Power-up Timer (PWRT) and Oscillator Start-up Timer (OST)
- Flexible Watchdog Timer (WDT) with on-chip low-power RC oscillator for reliable operation
- Fail-Safe Clock Monitor operation:
  - Detects clock failure and switches to on-chip low-power RC oscillator
- Programmable code protection
- In-Circuit Serial Programming™ (ICSP™)
- Selectable Power Management modes:
  - Sleep, Idle and Alternate Clock modes

© 2011 Microchip Technology Inc.

Downloaded from Arrow.com.

CMOS Technology:

- Low-power, high-speed Flash technology
- Wide operating voltage range (2.5V to 5.5V)
- Industrial and Extended temperature ranges
- Low power consumption

dsPIC30F6011A/6012A/6013A/6014A Controller Families

Device	Pins	Program Memory		SRAM Bytes	EEPROM Bytes	Timer 16-bit	Input Cap	Output Comp/Std PWM	Codec Interface	ADC 12-bit 100 Ksps	UART	SPI	I^2C^{TM}	CAN
		Bytes	Instructions											
dsPIC30F6011A	64	132K	44K	6144	2048	5	8	8	—	16 ch	2	2	1	2
dsPIC30F6012A	64	144K	48K	8192	4096	5	8	8	AC'97, I^2S	16 ch	2	2	1	2
dsPIC30F6013A	80	132K	44K	6144	2048	5	8	8	—	16 ch	2	2	1	2
dsPIC30F6014A	80	144K	48K	8192	4096	5	8	8	AC'97, I^2S	16 ch	2	2	1	2

© 2011 Microchip Technology Inc.

Downloaded from Arrow.com.

Pin Diagrams

64-Pin TQFP

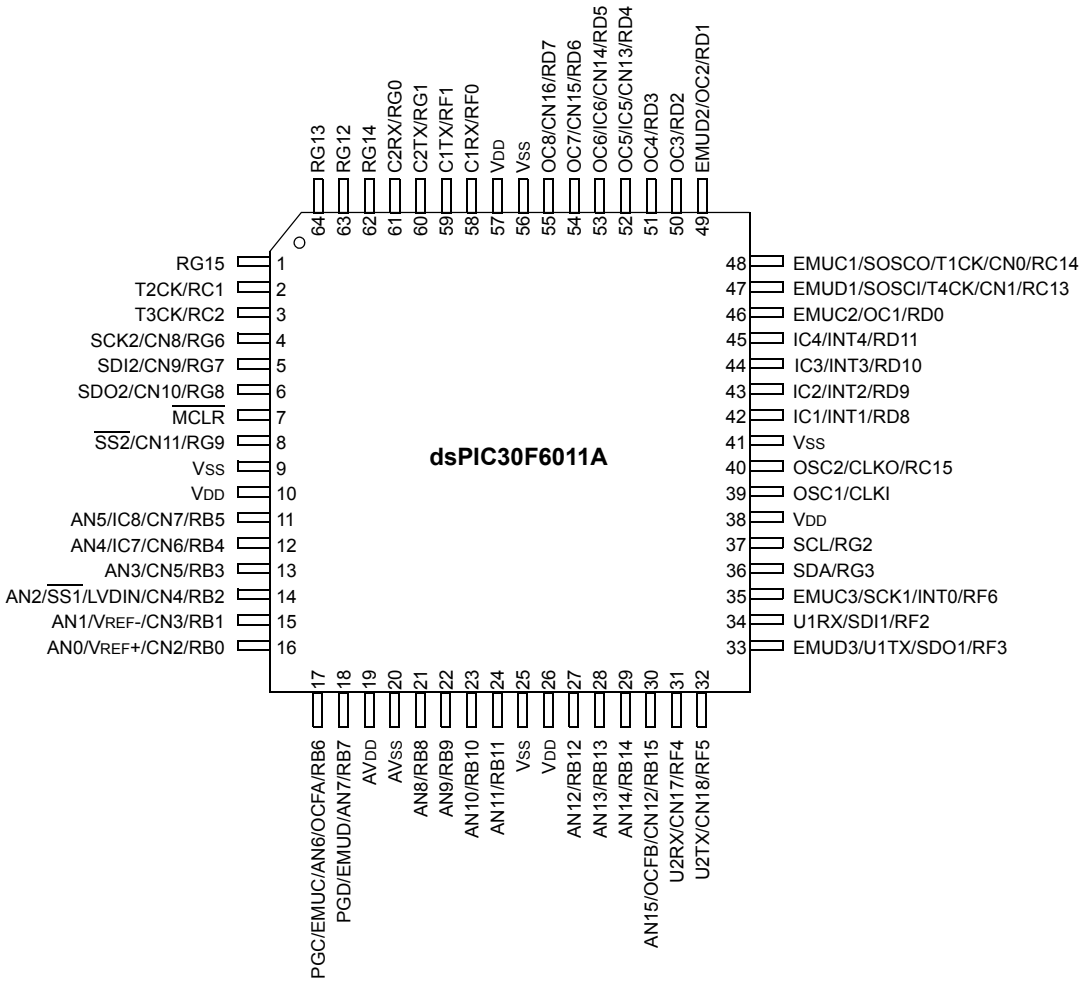

Downloaded from Arrow.com.

Pin Diagrams (Continued)

64-Pin TQFP

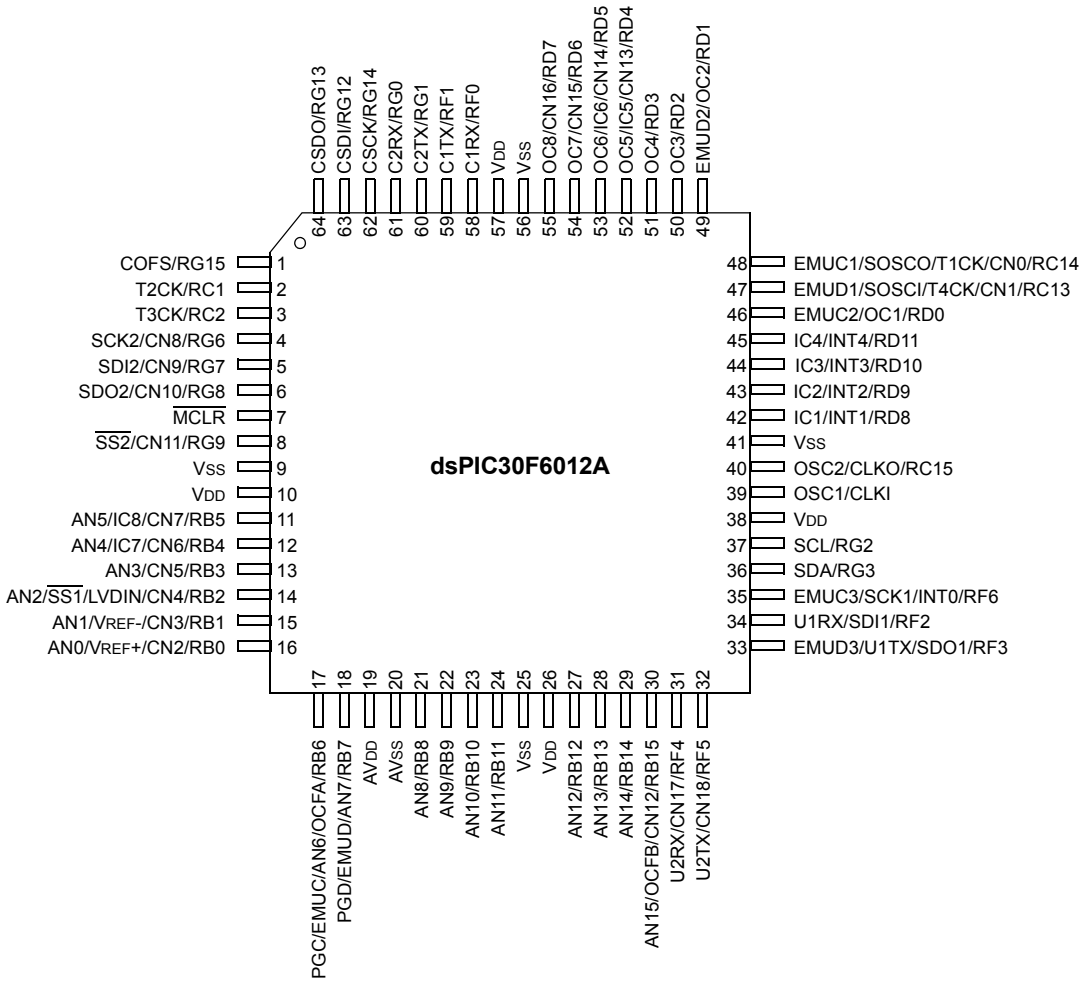

© 2011 Microchip Technology Inc.

Downloaded from Arrow.com.

Pin Diagrams (Continued)

80-Pin TQFP

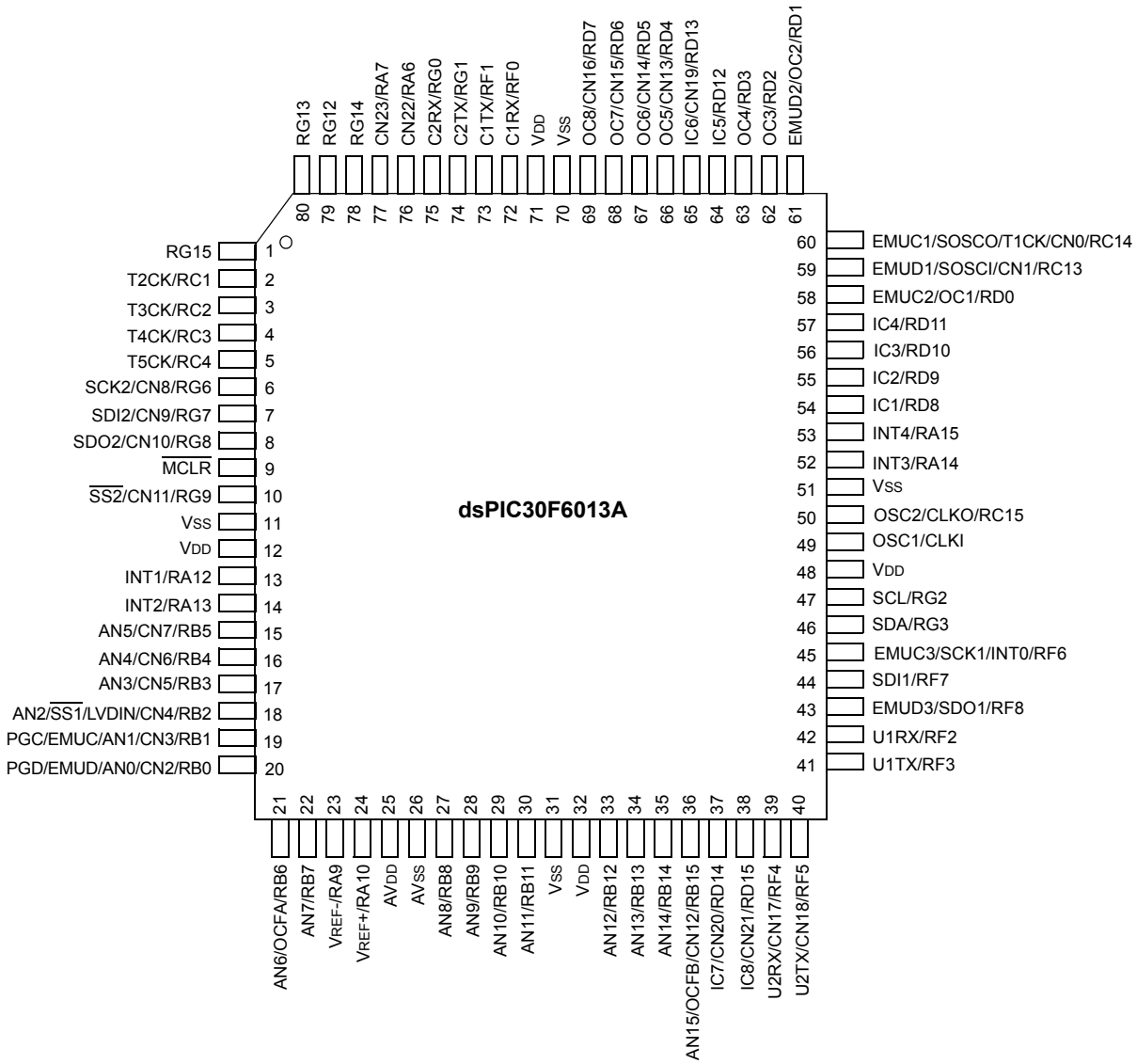

Downloaded from Arrow.com.

Pin Diagrams (Continued)

80-Pin TQFP

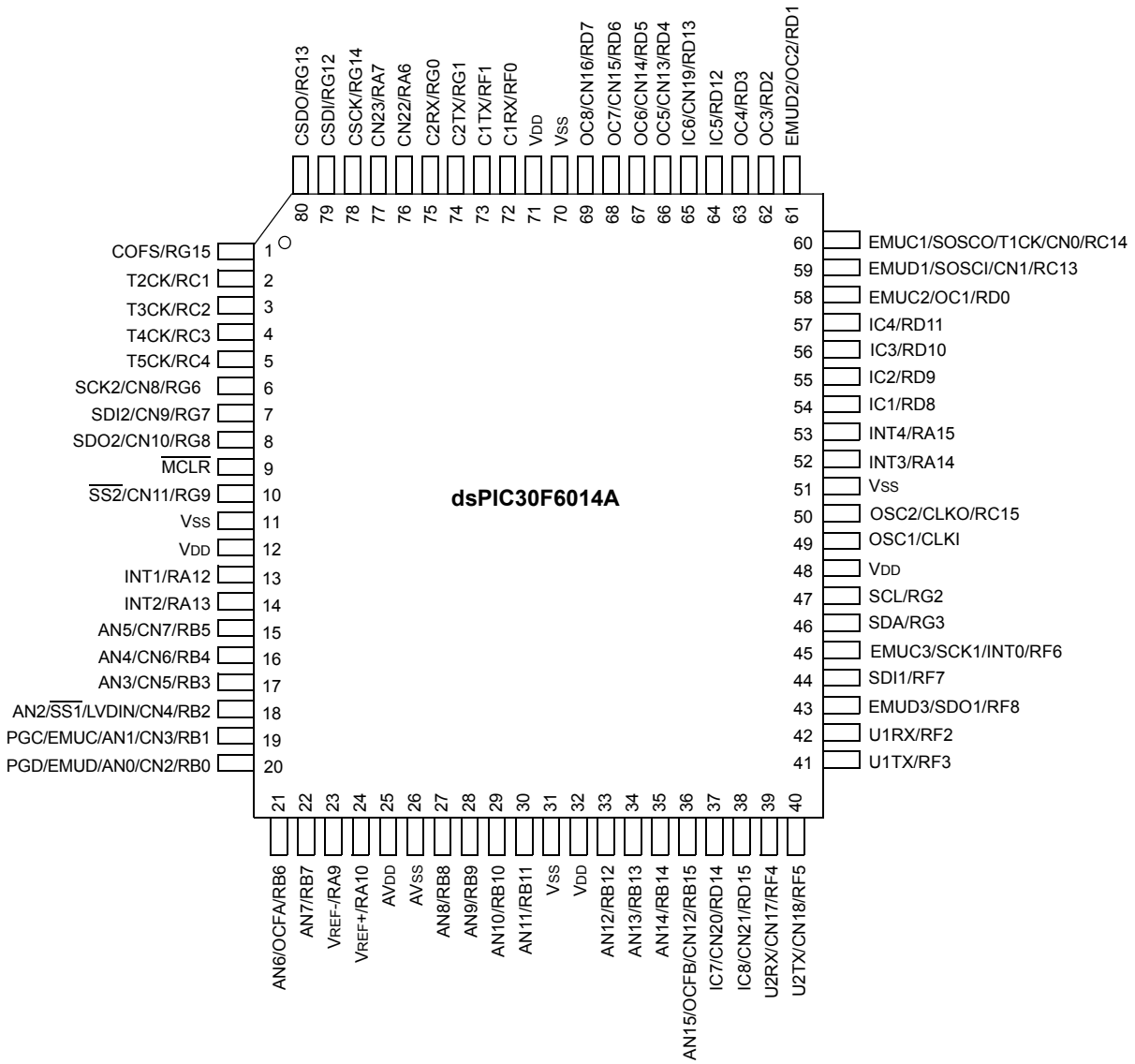

© 2011 Microchip Technology Inc.

Downloaded from Arrow.com.

Table of Contents

1.0 Device Overview 11
2.0 CPU Architecture Overview 17
3.0 Memory Organization 25
4.0 Address Generator Units 39
5.0 Interrupts 45
6.0 Flash Program Memory 51
7.0 Data EEPROM Memory 57
8.0 I/O Ports 61
9.0 Timer1 Module 67
10.0 Timer2/3 Module 71
11.0 Timer4/5 Module 77
12.0 Input Capture Module 81
13.0 Output Compare Module 85
14.0 SPI™ Module 91
15.0 I2C™ Module 95
16.0 Universal Asynchronous Receiver Transmitter (UART) Module 103
17.0 CAN Module 111
18.0 Data Converter Interface (DCI) Module 123
19.0 12-bit Analog-to-Digital Converter (ADC) Module 133
20.0 System Integration 143
21.0 Instruction Set Summary 161
22.0 Development Support 169
23.0 Electrical Characteristics 173
24.0 Packaging Information 213
Appendix A: Revision History 223
Index 225
The Microchip Web Site 231
Customer Change Notification Service 231
Customer Support 231
Reader Response 232
Product Identification System 233

TO OUR VALUED CUSTOMERS

It is our intention to provide our valued customers with the best documentation possible to ensure successful use of your Microchip products. To this end, we will continue to improve our publications to better suit your needs. Our publications will be refined and enhanced as new volumes and updates are introduced.

If you have any questions or comments regarding this publication, please contact the Marketing Communications Department via E-mail at **docerrors@microchip.com** or fax the **Reader Response Form** in the back of this data sheet to (480) 792-4150. We welcome your feedback.

Most Current Data Sheet

To obtain the most up-to-date version of this data sheet, please register at our Worldwide Web site at:

http://www.microchip.com

You can determine the version of a data sheet by examining its literature number found on the bottom outside corner of any page. The last character of the literature number is the version number, (e.g., DS30000A is version A of document DS30000).

Errata

An errata sheet, describing minor operational differences from the data sheet and recommended workarounds, may exist for current devices. As device/documentation issues become known to us, we will publish an errata sheet. The errata will specify the revision of silicon and revision of document to which it applies.

To determine if an errata sheet exists for a particular device, please check with one of the following:

- Microchip's Worldwide Web site; **http://www.microchip.com**
- Your local Microchip sales office (see last page)

When contacting a sales office, please specify which device, revision of silicon and data sheet (include literature number) you are using.

Customer Notification System

Register on our web site at **www.microchip.com** to receive the most current information on all of our products.

Downloaded from Arrow.com.

NOTES:

© 2011 Microchip Technology Inc.

Downloaded from Arrow.com.

1.0 DEVICE OVERVIEW

Note:	This data sheet summarizes features of this group of dsPIC30F devices and is not intended to be a complete reference source. For more information on the CPU, peripherals, register descriptions and general device functionality, refer to the "*dsPIC30F Family Reference Manual*" (DS70046). For more information on the device instruction set and programming, refer to the *"16-bit MCU and DSC Programmer's Reference Manual"* (DS70157).

This document contains specific information for the dsPIC30F6011A/6012A/6013A/6014A Digital Signal Controller (DSC) devices. The dsPIC30F devices contain extensive Digital Signal Processor (DSP) functionality within a high-performance 16-bit microcontroller (MCU) architecture. Figure 1-1 and Figure 1-2 show device block diagrams for dsPIC30F6011A/6012A and dsPIC30F6013A/6014A, respectively.

Downloaded from Arrow.com.

FIGURE 1-1: dsPIC30F6011A/6012A BLOCK DIAGRAM

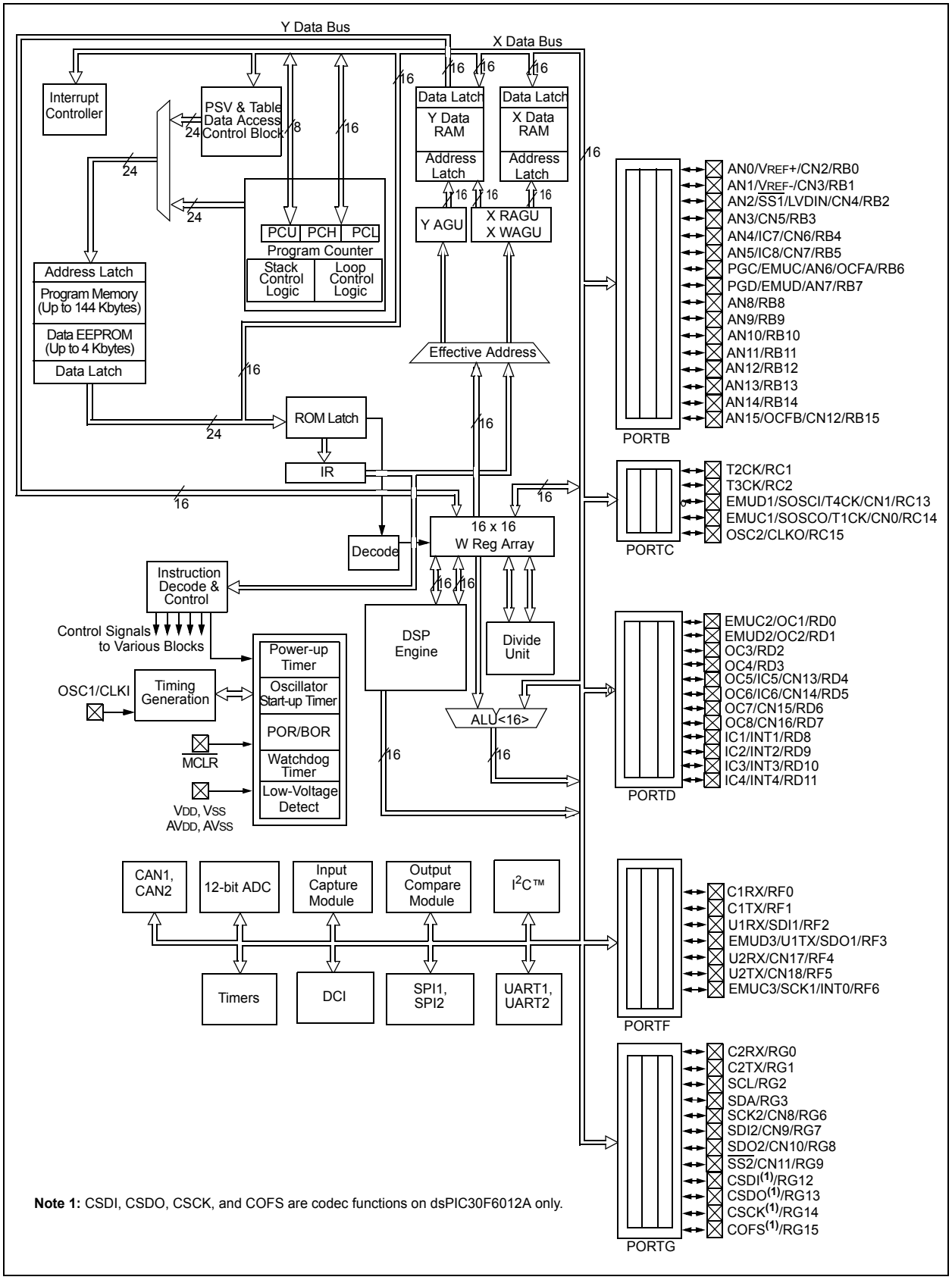

Note 1: CSDI, CSDO, CSCK, and COFS are codec functions on dsPIC30F6012A only.

© 2011 Microchip Technology Inc.

Downloaded from Arrow.com.

FIGURE 1-2: dsPIC30F6013A/6014A BLOCK DIAGRAM

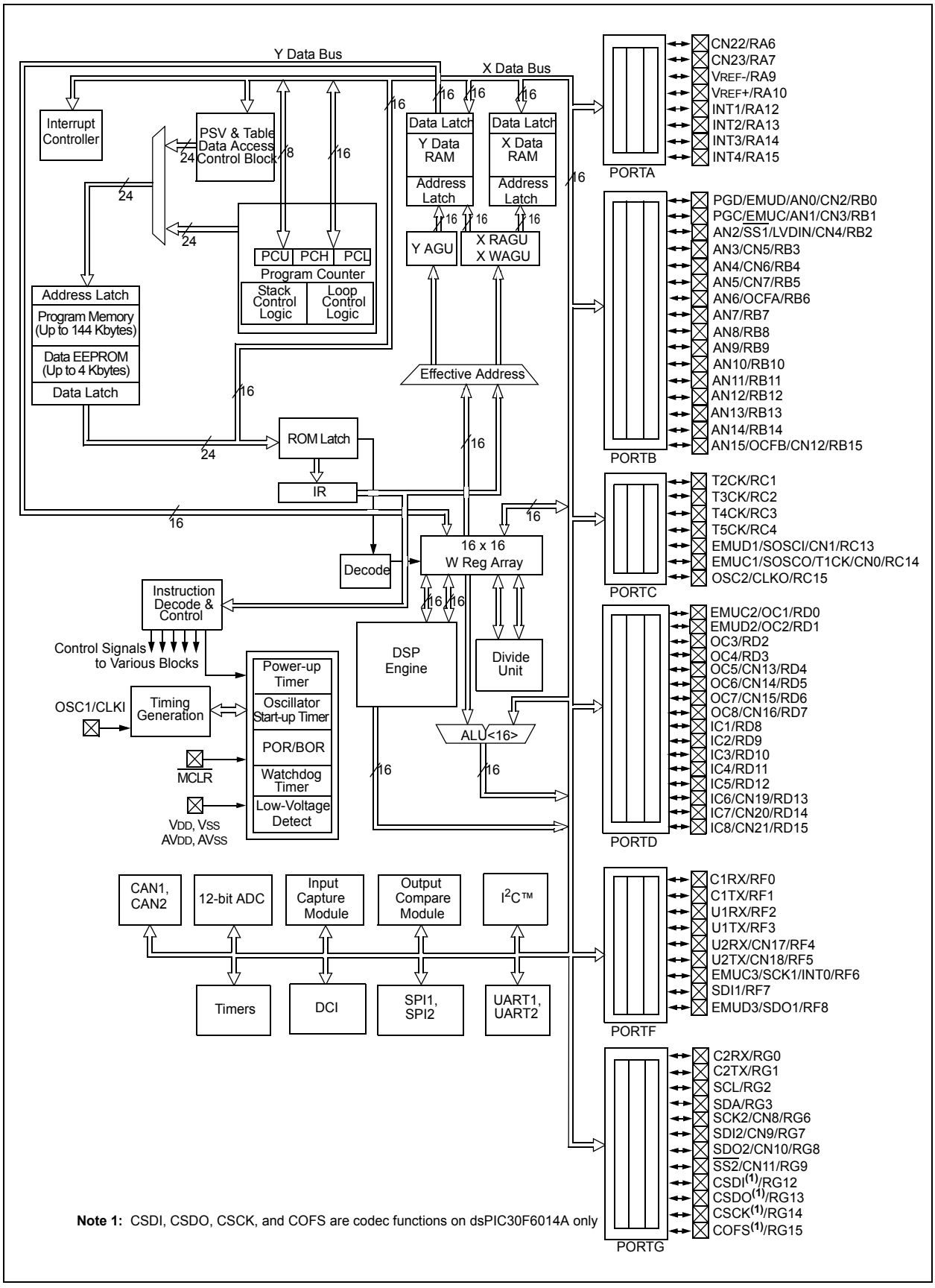

Note 1: CSDI, CSDO, CSCK, and COFS are codec functions on dsPIC30F6014A only

Downloaded from Arrow.com.

Table 1-1 provides a brief description of device I/O pin-outs and the functions that may be multiplexed to a port pin. Multiple functions may exist on one port pin. When multiplexing occurs, the peripheral module's functional requirements may force an override of the data direction of the port pin.

TABLE 1-1: PINOUT I/O DESCRIPTIONS

Pin Name	Pin Type	Buffer Type	Description
AN0-AN15	I	Analog	Analog input channels. AN0 and AN1 are also used for device programming data and clock inputs, respectively.
AVDD	P	P	Positive supply for analog module. This pin must be connected at all times.
AVSS	P	P	Ground reference for analog module. This pin must be connected at all times.
CLKI CLKO	I O	ST/CMOS —	External clock source input. Always associated with OSC1 pin function. Oscillator crystal output. Connects to crystal or resonator in Crystal Oscillator mode. Optionally functions as CLKO in RC and EC modes. Always associated with OSC2 pin function.
CN0-CN23	I	ST	Input change notification inputs. Can be software programmed for internal weak pull-ups on all inputs.
COFS CSCK CSDI CSDO	I/O I/O I O	ST ST ST —	Data Converter Interface frame synchronization pin. Data Converter Interface serial clock input/output pin. Data Converter Interface serial data input pin. Data Converter Interface serial data output pin.
C1RX C1TX C2RX C2TX	I O I O	ST — ST —	CAN1 bus receive pin. CAN1 bus transmit pin. CAN2 bus receive pin. CAN2 bus transmit pin
EMUD EMUC EMUD1 EMUC1 EMUD2 EMUC2 EMUD3 EMUC3	I/O I/O I/O I/O I/O I/O I/O I/O	ST ST ST ST ST ST ST ST	ICD Primary Communication Channel data input/output pin. ICD Primary Communication Channel clock input/output pin. ICD Secondary Communication Channel data input/output pin. ICD Secondary Communication Channel clock input/output pin. ICD Tertiary Communication Channel data input/output pin. ICD Tertiary Communication Channel clock input/output pin. ICD Quaternary Communication Channel data input/output pin. ICD Quaternary Communication Channel clock input/output pin.
IC1-IC8	I	ST	Capture inputs 1 through 8.
INT0 INT1 INT2 INT3 INT4	I I I I I	ST ST ST ST ST	External interrupt 0. External interrupt 1. External interrupt 2. External interrupt 3. External interrupt 4.
LVDIN	I	Analog	Low-Voltage Detect Reference Voltage input pin.
MCLR	I/P	ST	Master Clear (Reset) input or programming voltage input. This pin is an active-low Reset to the device.
OCFA OCFB OC1-OC8	I I O	ST ST —	Compare Fault A input (for Compare channels 1, 2, 3 and 4). Compare Fault B input (for Compare channels 5, 6, 7 and 8). Compare outputs 1 through 8.
OSC1 OSC2	I I/O	ST/CMOS —	Oscillator crystal input. ST buffer when configured in RC mode; CMOS otherwise. Oscillator crystal output. Connects to crystal or resonator in Crystal Oscillator mode. Optionally functions as CLKO in RC and EC modes.

Legend: CMOS = CMOS compatible input or output; Analog = Analog input
ST = Schmitt Trigger input with CMOS levels; O = Output
I = Input; P = Power

© 2011 Microchip Technology Inc.

Downloaded from Arrow.com.

TABLE 1-1: PINOUT I/O DESCRIPTIONS (CONTINUED)

Pin Name	Pin Type	Buffer Type	Description
PGD	I/O	ST	In-Circuit Serial Programming™ data input/output pin.
PGC	I	ST	In-Circuit Serial Programming clock input pin.
RA6-RA7	I/O	ST	PORTA is a bidirectional I/O port.
RA9-RA10	I/O	ST	
RA12-RA15	I/O	ST	
RB0-RB15	I/O	ST	PORTB is a bidirectional I/O port.
RC1-RC4	I/O	ST	PORTC is a bidirectional I/O port.
RC13-RC15	I/O	ST	
RD0-RD15	I/O	ST	PORTD is a bidirectional I/O port.
RF0-RF8	I/O	ST	PORTF is a bidirectional I/O port.
RG0-RG3	I/O	ST	PORTG is a bidirectional I/O port.
RG6-RG9	I/O	ST	
RG12-RG15	I/O	ST	
SCK1	I/O	ST	Synchronous serial clock input/output for SPI1.
SDI1	I	ST	SPI1 Data In.
SDO1	O	—	SPI1 Data Out.
$\overline{SS1}$	I	ST	SPI1 Slave Synchronization.
SCK2	I/O	ST	Synchronous serial clock input/output for SPI2.
SDI2	I	ST	SPI2 Data In.
SDO2	O	—	SPI2 Data Out.
$\overline{SS2}$	I	ST	SPI2 Slave Synchronization.
SCL	I/O	ST	Synchronous serial clock input/output for I^2C™.
SDA	I/O	ST	Synchronous serial data input/output for I^2C.
SOSCO	O	—	32 kHz low-power oscillator crystal output.
SOSCI	I	ST/CMOS	32 kHz low-power oscillator crystal input. ST buffer when configured in RC mode; CMOS otherwise.
T1CK	I	ST	Timer1 external clock input.
T2CK	I	ST	Timer2 external clock input.
T3CK	I	ST	Timer3 external clock input.
T4CK	I	ST	Timer4 external clock input.
T5CK	I	ST	Timer5 external clock input.
U1RX	I	ST	UART1 Receive.
U1TX	O	—	UART1 Transmit.
U1ARX	I	ST	UART1 Alternate Receive.
U1ATX	O	—	UART1 Alternate Transmit.
U2RX	I	ST	UART2 Receive.
U2TX	O	—	UART2 Transmit.
VDD	P	—	Positive supply for logic and I/O pins.
VSS	P	—	Ground reference for logic and I/O pins.
VREF+	I	Analog	Analog Voltage Reference (High) input.
VREF-	I	Analog	Analog Voltage Reference (Low) input.

Legend: CMOS = CMOS compatible input or output; Analog = Analog input
ST = Schmitt Trigger input with CMOS levels; O = Output
I = Input; P = Power

Downloaded from Arrow.com.

NOTES:

© 2011 Microchip Technology Inc.

Downloaded from Arrow.com.

2.0 CPU ARCHITECTURE OVERVIEW

Note: This data sheet summarizes features of this group of dsPIC30F devices and is not intended to be a complete reference source. For more information on the CPU, peripherals, register descriptions and general device functionality, refer to the "*dsPIC30F Family Reference Manual*" (DS70046). For more information on the device instruction set and programming, refer to the *"16-bit MCU and DSC Programmer's Reference Manual"* (DS70157).

2.1 Core Overview

This section contains a brief overview of the CPU architecture of the dsPIC30F. For additional hardware and programming information, please refer to the "*dsPIC30F Family Reference Manual"* (DS70046) and the *"16-bit MCU and DSC Programmer's Reference Manual*" (DS70157), respectively.

The core has a 24-bit instruction word. The Program Counter (PC) is 23-bits wide with the Least Significant bit (LSb) always clear (refer to **Section 3.1 "Program Address Space"**), and the Most Significant bit (MSb) is ignored during normal program execution, except for certain specialized instructions. Thus, the PC can address up to 4M instruction words of user program space. An instruction prefetch mechanism is used to help maintain throughput. Program loop constructs, free from loop count management overhead, are supported using the `DO` and `REPEAT` instructions, both of which are interruptible at any point.

The working register array consists of 16 x 16-bit registers, each of which can act as data, address or offset registers. One working register (W15) operates as a software Stack Pointer for interrupts and calls.

The data space is 64 Kbytes (32K words) and is split into two blocks, referred to as X and Y data memory. Each block has its own independent Address Generation Unit (AGU). Most instructions operate solely through the X memory, AGU, which provides the appearance of a single unified data space. The Multiply-Accumulate (`MAC`) class of dual source DSP instructions operate through both the X and Y AGUs, splitting the data address space into two parts (see **Section 3.2 "Data Address Space"**). The X and Y data space boundary is device specific and cannot be altered by the user. Each data word consists of 2 bytes, and most instructions can address data either as words or bytes.

There are two methods of accessing data stored in program memory:

- The upper 32 Kbytes of data space memory can be mapped into the lower half (user space) of program space at any 16K program word boundary, defined by the 8-bit Program Space Visibility Page (PSVPAG) register. This lets any instruction access program space as if it were data space, with a limitation that the access requires an additional cycle. Moreover, only the lower 16 bits of each instruction word can be accessed using this method.
- Linear indirect access of 32K word pages within program space is also possible using any working register, via table read and write instructions. Table read and write instructions can be used to access all 24 bits of an instruction word.

Overhead-free circular buffers (Modulo Addressing) are supported in both X and Y address spaces. This is primarily intended to remove the loop overhead for DSP algorithms.

The X AGU also supports Bit-Reversed Addressing on destination effective addresses to greatly simplify input or output data reordering for radix-2 FFT algorithms. Refer to **Section 4.0 "Address Generator Units"** for details on modulo and Bit-Reversed Addressing.

The core supports Inherent (no operand), Relative, Literal, Memory Direct, Register Direct, Register Indirect, Register Offset and Literal Offset Addressing modes. Instructions are associated with predefined addressing modes, depending upon their functional requirements.

For most instructions, the core is capable of executing a data (or program data) memory read, a working register (data) read, a data memory write and a program (instruction) memory read per instruction cycle. As a result, 3-operand instructions are supported, allowing C = A + B operations to be executed in a single cycle.

A DSP engine has been included to significantly enhance the core arithmetic capability and throughput. It features a high-speed 17-bit by 17-bit multiplier, a 40-bit ALU, two 40-bit saturating accumulators and a 40-bit bidirectional barrel shifter. Data in the accumulator or any working register can be shifted up to 16 bits right, or 16 bits left in a single cycle. The DSP instructions operate seamlessly with all other instructions and have been designed for optimal real-time performance. The `MAC` class of instructions can concurrently fetch two data operands from memory while multiplying two W registers. To enable this concurrent fetching of data operands, the data space has been split for these instructions and linear for all others. This has been achieved in a transparent and flexible manner, by dedicating certain working registers to each address space for the `MAC` class of instructions.

Downloaded from Arrow.com.

The core does not support a multi-stage instruction pipeline. However, a single stage instruction prefetch mechanism is used, which accesses and partially decodes instructions a cycle ahead of execution, in order to maximize available execution time. Most instructions execute in a single cycle with certain exceptions.

The core features a vectored exception processing structure for traps and interrupts, with 62 independent vectors. The exceptions consist of up to 8 traps (of which 4 are reserved) and 54 interrupts. Each interrupt is prioritized based on a user-assigned priority between 1 and 7 (1 being the lowest priority and 7 being the highest), in conjunction with a predetermined 'natural order'. Traps have fixed priorities ranging from 8 to 15.

2.2 Programmer's Model

The programmer's model is shown in Figure 2-1 and consists of 16 x 16-bit working registers (W0 through W15), 2 x 40-bit accumulators (ACCA and ACCB), STATUS register (SR), Data Table Page register (TBLPAG), Program Space Visibility Page register (PSVPAG), DO and REPEAT registers (DOSTART, DOEND, DCOUNT and RCOUNT) and Program Counter (PC). The working registers can act as data, address or offset registers. All registers are memory mapped. W0 acts as the W register for file register addressing.

Some of these registers have a shadow register associated with each of them, as shown in Figure 2-1. The shadow register is used as a temporary holding register and can transfer its contents to or from its host register upon the occurrence of an event. None of the shadow registers are accessible directly. The following rules apply for transfer of registers into and out of shadows.

- `PUSH.S` and `POP.S`
  W0, W1, W2, W3, SR (DC, N, OV, Z and C bits only) are transferred.
- `DO` instruction
  DOSTART, DOEND, DCOUNT shadows are pushed on loop start, and popped on loop end.

When a byte operation is performed on a working register, only the Least Significant Byte (LSB) of the target register is affected. However, a benefit of memory mapped working registers is that both the Least and Most Significant Bytes can be manipulated through byte wide data memory space accesses.

2.2.1 SOFTWARE STACK POINTER/ FRAME POINTER

The dsPIC® DSC devices contain a software stack. W15 is the dedicated software Stack Pointer (SP), and will be automatically modified by exception processing and subroutine calls and returns. However, W15 can be referenced by any instruction in the same manner as all other W registers. This simplifies the reading, writing and manipulation of the Stack Pointer (e.g., creating stack frames).

Note:	In order to protect against misaligned stack accesses, W15<0> is always clear.

W15 is initialized to 0x0800 during a Reset. The user may reprogram the SP during initialization to any location within data space.

W14 has been dedicated as a Stack Frame Pointer as defined by the `LNK` and `ULNK` instructions. However, W14 can be referenced by any instruction in the same manner as all other W registers.

2.2.2 STATUS REGISTER

The dsPIC DSC core has a 16-bit STATUS register (SR), the LSB of which is referred to as the SR Low byte (SRL) and the Most Significant Byte (MSB) as the SR High byte (SRH). See Figure 2-1 for SR layout.

SRL contains all the MCU ALU operation status flags (including the Z bit), as well as the CPU Interrupt Priority Level status bits, IPL<2:0> and the Repeat Active status bit, RA. During exception processing, SRL is concatenated with the MSB of the PC to form a complete word value which is then stacked.

The upper byte of the STATUS register contains the DSP Adder/Subtracter status bits, the DO Loop Active bit (DA) and the Digit Carry (DC) status bit.

2.2.3 PROGRAM COUNTER

The Program Counter is 23-bits wide; bit 0 is always clear. Therefore, the PC can address up to 4M instruction words.

© 2011 Microchip Technology Inc.

Downloaded from Arrow.com.

FIGURE 2-1: PROGRAMMER'S MODEL

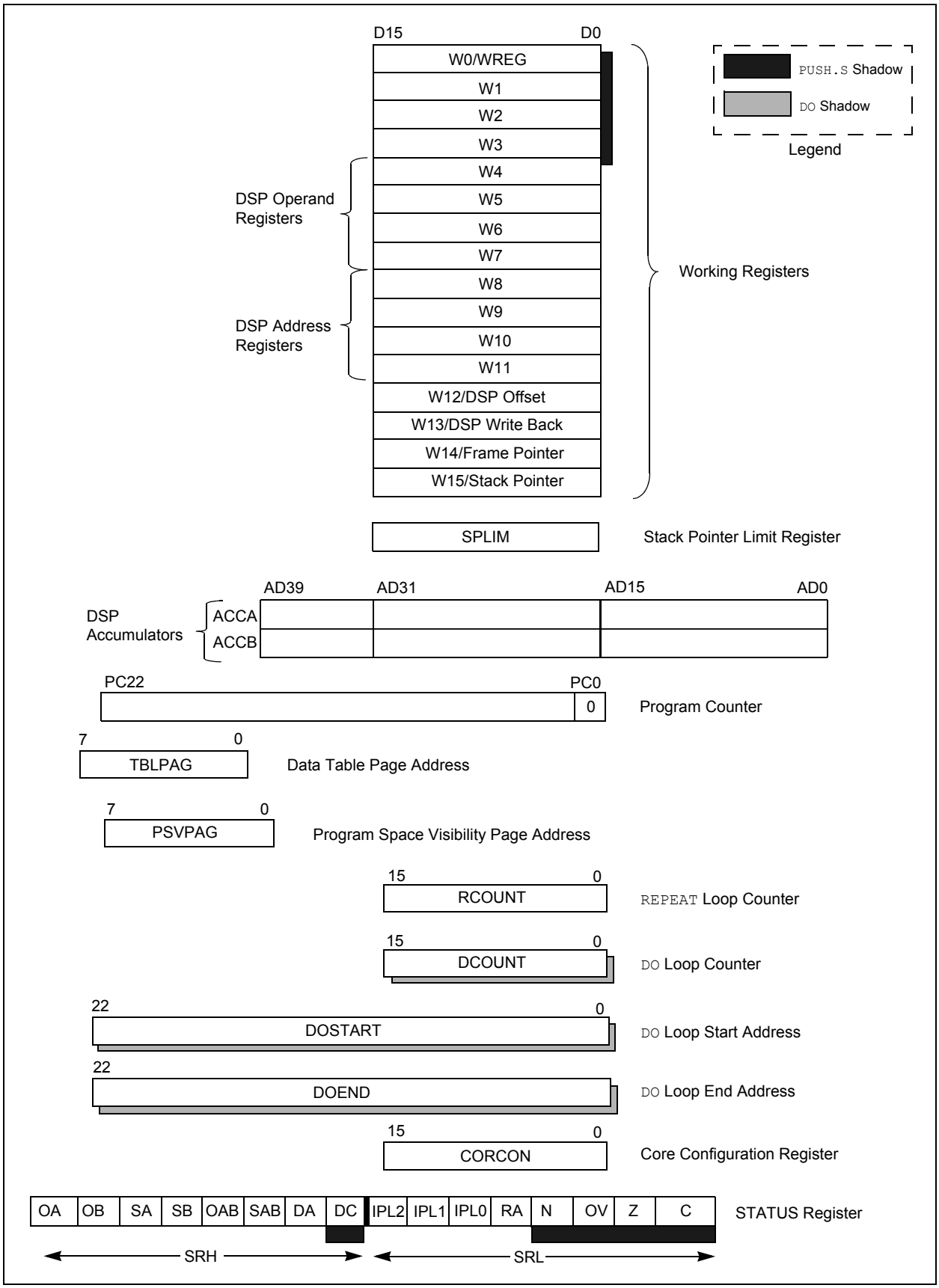

Downloaded from Arrow.com.

2.3 Divide Support

The dsPIC DSC devices feature a 16/16-bit signed fractional divide operation, as well as 32/16-bit and 16/16-bit signed and unsigned integer divide operations, in the form of single instruction iterative divides. The following instructions and data sizes are supported:

- `DIVF` - 16/16 signed fractional divide
- `DIV.sd` - 32/16 signed divide
- `DIV.ud` - 32/16 unsigned divide
- `DIV.sw` - 16/16 signed divide
- `DIV.uw` - 16/16 unsigned divide

The 16/16 divides are similar to the 32/16 (same number of iterations), but the dividend is either zero-extended or sign-extended during the first iteration.

The divide instructions must be executed within a `REPEAT` loop. Any other form of execution (e.g., a series of discrete divide instructions) will not function correctly because the instruction flow depends on RCOUNT. The divide instruction does not automatically set up the RCOUNT value and it must, therefore, be explicitly and correctly specified in the `REPEAT` instruction as shown in Table 2-2 (`REPEAT` will execute the target instruction {operand value + 1} times). The REPEAT loop count must be setup for 18 iterations of the `DIV/DIVF` instruction. Thus, a complete divide operation requires 19 cycles.

Note:	The divide flow is interruptible. However, the user needs to save the context as appropriate.

2.4 DSP Engine

The DSP engine consists of a high-speed 17-bit x 17-bit multiplier, a barrel shifter and a 40-bit adder/subtracter (with two target accumulators, round and saturation logic).

The dsPIC30F is a single-cycle instruction flow architecture; therefore, concurrent operation of the DSP engine with MCU instruction flow is not possible. However, some MCU ALU and DSP engine resources may be used concurrently by the same instruction (e.g., ED, EDAC).

The DSP engine also has the capability to perform inherent accumulator-to-accumulator operations, which require no additional data. These instructions are `ADD`, `SUB` and `NEG`.

The DSP engine has various options selected through various bits in the CPU Core Configuration register (CORCON), as listed below:

1. Fractional or integer DSP multiply (IF).
2. Signed or unsigned DSP multiply (US).
3. Conventional or convergent rounding (RND).
4. Automatic saturation on/off for ACCA (SATA).
5. Automatic saturation on/off for ACCB (SATB).
6. Automatic saturation on/off for writes to data memory (SATDW).
7. Accumulator Saturation mode selection (ACCSAT).

Note:	For CORCON layout, see Table 3-3.

A block diagram of the DSP engine is shown in Figure 2-2.

TABLE 2-1: DSP INSTRUCTIONS SUMMARY

Instruction	Algebraic Operation	ACC Write Back
`CLR`	$A = 0$	Yes
`ED`	$A = (x - y)^2$	No
`EDAC`	$A = A + (x - y)^2$	No
`MAC`	$A = A + (x * y)$	Yes
`MAC`	$A = A + x^2$	No
`MOVSAC`	No change in A	Yes
`MPY`	$A = x * y$	No
`MPY`	$A = x^2$	No
`MPY.N`	$A = -x * y$	No
`MSC`	$A = A - x * y$	Yes

TABLE 2-2: DIVIDE INSTRUCTIONS

Instruction	Function
`DIVF`	Signed fractional divide: Wm/Wn →W0; Rem →W1
`DIV.sd`	Signed divide: (Wm + 1:Wm)/Wn →W0; Rem →W1
`DIV.ud`	Unsigned divide: (Wm + 1:Wm)/Wn →W0; Rem →W1
`DIV.sw`	Signed divide: Wm/Wn →W0; Rem →W1
`DIV.uw`	Unsigned divide: Wm/Wn →W0; Rem →W1

© 2011 Microchip Technology Inc.

Downloaded from Arrow.com.

FIGURE 2-2: DSP ENGINE BLOCK DIAGRAM

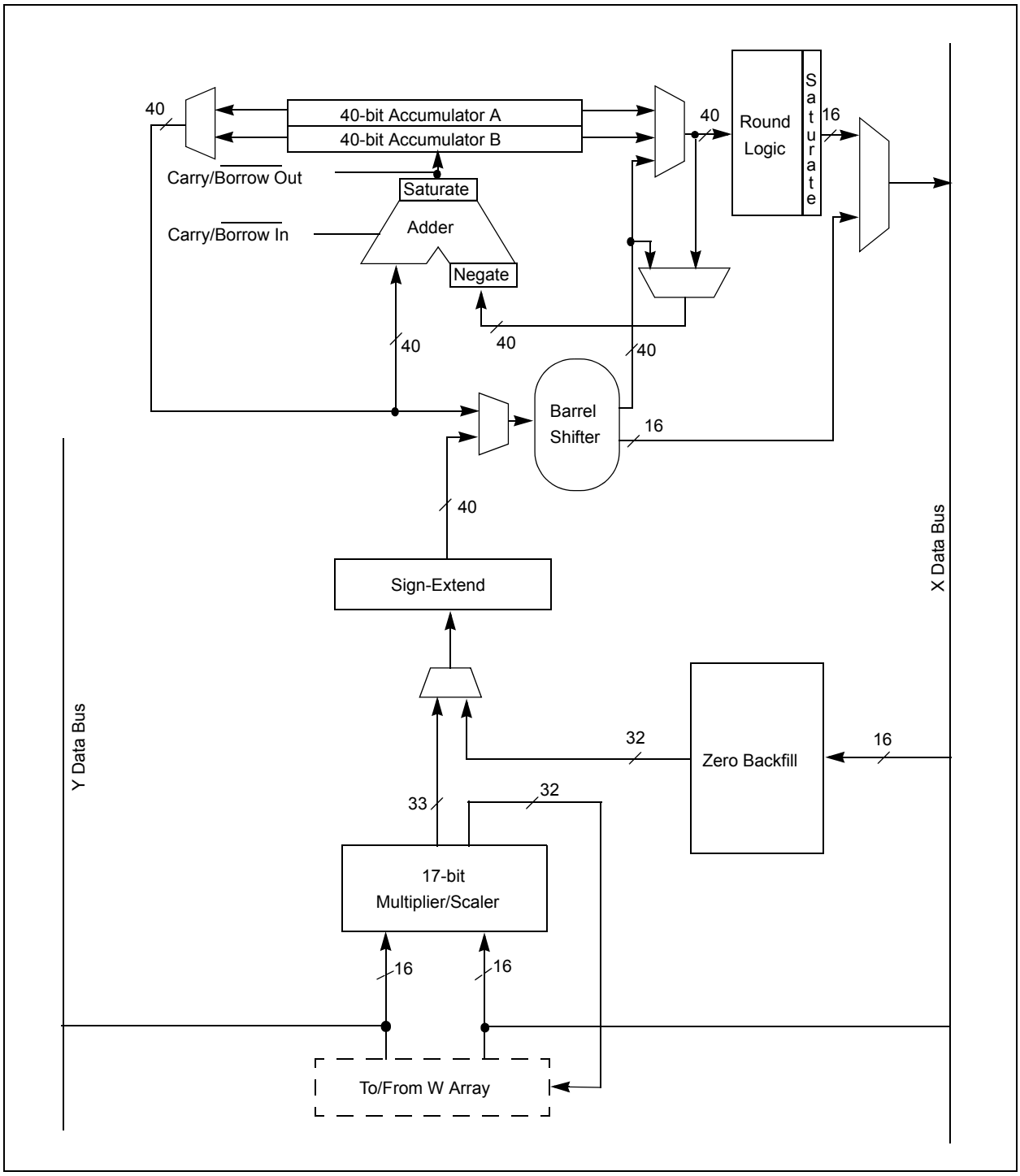

Downloaded from Arrow.com.

2.4.1 MULTIPLIER

The 17 x 17-bit multiplier is capable of signed or unsigned operation and can multiplex its output using a scaler to support either 1.31 fractional (Q31) or 32-bit integer results. Unsigned operands are zero-extended into the 17th bit of the multiplier input value. Signed operands are sign-extended into the 17th bit of the multiplier input value. The output of the 17 x 17-bit multiplier/scaler is a 33-bit value which is sign-extended to 40 bits. Integer data is inherently represented as a signed two's complement value, where the MSB is defined as a sign bit. Generally speaking, the range of an N-bit two's complement integer is -2^{N-1} to $2^{N-1} - 1$. For a 16-bit integer, the data range is -32768 (0x8000) to 32767 (0x7FFF) including '0'. For a 32-bit integer, the data range is -2,147,483,648 (0x8000 0000) to 2,147,483,647 (0x7FFF FFFF).

When the multiplier is configured for fractional multiplication, the data is represented as a two's complement fraction, where the MSB is defined as a sign bit and the radix point is implied to lie just after the sign bit (QX format). The range of an N-bit two's complement fraction with this implied radix point is -1.0 to $(1 - 2^{1-N})$. For a 16-bit fraction, the Q15 data range is -1.0 (0x8000) to 0.999969482 (0x7FFF) including '0' and has a precision of 3.01518×10^{-5}. In Fractional mode, the 16x16 multiply operation generates a 1.31 product which has a precision of 4.65661×10^{-10}.

The same multiplier is used to support the MCU multiply instructions which include integer 16-bit signed, unsigned and mixed sign multiplies.

The `MUL` instruction may be directed to use byte or word sized operands. Byte operands will direct a 16-bit result, and word operands will direct a 32-bit result to the specified register(s) in the W array.

2.4.2 DATA ACCUMULATORS AND ADDER/SUBTRACTER

The data accumulator consists of a 40-bit adder/subtracter with automatic sign extension logic. It can select one of two accumulators (A or B) as its pre-accumulation source and post-accumulation destination. For the `ADD` and `LAC` instructions, the data to be accumulated or loaded can be optionally scaled via the barrel shifter, prior to accumulation.

2.4.2.1 Adder/Subtracter, Overflow and Saturation

The adder/subtracter is a 40-bit adder with an optional zero input into one side and either true, or complement data into the other input. In the case of addition, the carry/borrow input is active high and the other input is true data (not complemented), whereas in the case of subtraction, the carry/borrow input is active low and the other input is complemented. The adder/subtracter generates overflow status bits SA/SB and OA/OB, which are latched and reflected in the STATUS register:

- Overflow from bit 39: this is a catastrophic overflow in which the sign of the accumulator is destroyed.
- Overflow into guard bits 32 through 39: this is a recoverable overflow. This bit is set whenever all the guard bits are not identical to each other.

The adder has an additional saturation block which controls accumulator data saturation, if selected. It uses the result of the adder, the overflow status bits described above, and the SATA/B (CORCON<7:6>) and ACCSAT (CORCON<4>) mode control bits to determine when and to what value to saturate.

Six STATUS register bits have been provided to support saturation and overflow; they are:

1. OA: ACCA overflowed into guard bits
2. OB: ACCB overflowed into guard bits
3. SA: ACCA saturated (bit 31 overflow and saturation)
   or
   ACCA overflowed into guard bits and saturated (bit 39 overflow and saturation)
4. SB: ACCB saturated (bit 31 overflow and saturation)
   or
   ACCB overflowed into guard bits and saturated (bit 39 overflow and saturation)
5. OAB: Logical OR of OA and OB
6. SAB: Logical OR of SA and SB

The OA and OB bits are modified each time data passes through the adder/subtracter. When set, they indicate that the most recent operation has overflowed into the accumulator guard bits (bits 32 through 39). The OA and OB bits can also optionally generate an arithmetic warning trap when set and the corresponding overflow trap flag enable bit (OVATE, OVBTE) in the INTCON1 register (refer to **Section 5.0 "Interrupts"**) is set. This allows the user to take immediate action, for example, to correct system gain.

© 2011 Microchip Technology Inc.

Downloaded from Arrow.com.

The SA and SB bits are modified each time data passes through the adder/subtracter but can only be cleared by the user. When set, they indicate that the accumulator has overflowed its maximum range (bit 31 for 32-bit saturation, or bit 39 for 40-bit saturation) and will be saturated (if saturation is enabled). When saturation is not enabled, SA and SB default to bit 39 overflow and thus indicate that a catastrophic overflow has occurred. If the COVTE bit in the INTCON1 register is set, SA and SB bits will generate an arithmetic warning trap when saturation is disabled.

The overflow and saturation status bits can optionally be viewed in the STATUS register (SR) as the logical OR of OA and OB (in bit OAB) and the logical OR of SA and SB (in bit SAB). This allows programmers to check one bit in the STATUS register to determine if either accumulator has overflowed, or one bit to determine if either accumulator has saturated. This would be useful for complex number arithmetic which typically uses both the accumulators.

The device supports three saturation and overflow modes:

1. Bit 39 Overflow and Saturation:
   When bit 39 overflow and saturation occurs, the saturation logic loads the maximally positive 9.31 (0x7FFFFFFFFF), or maximally negative 9.31 value (0x8000000000) into the target accumulator. The SA or SB bit is set and remains set until cleared by the user. This is referred to as ‘super saturation’ and provides protection against erroneous data, or unexpected algorithm problems (e.g., gain calculations).
2. Bit 31 Overflow and Saturation:
   When bit 31 overflow and saturation occurs, the saturation logic then loads the maximally positive 1.31 value (0x007FFFFFFF), or maximally negative 1.31 value (0x0080000000) into the target accumulator. The SA or SB bit is set and remains set until cleared by the user. When this Saturation mode is in effect, the guard bits are not used (so the OA, OB or OAB bits are never set).
3. Bit 39 Catastrophic Overflow:
   The bit 39 overflow status bit from the adder is used to set the SA or SB bit which remain set until cleared by the user. No saturation operation is performed and the accumulator is allowed to overflow (destroying its sign). If the COVTE bit in the INTCON1 register is set, a catastrophic overflow can initiate a trap exception.

2.4.2.2 Accumulator ‘Write Back’

The `MAC` class of instructions (with the exception of `MPY`, `MPY.N`, `ED` and `EDAC`) can optionally write a rounded version of the high word (bits 31 through 16) of the accumulator that is not targeted by the instruction into data space memory. The write is performed across the X bus into combined X and Y address space. The following addressing modes are supported:

1. W13, Register Direct:
   The rounded contents of the non-target accumulator are written into W13 as a 1.15 fraction.
2. [W13] + = 2, Register Indirect with Post-Increment:
   The rounded contents of the non-target accumulator are written into the address pointed to by W13 as a 1.15 fraction. W13 is then incremented by 2 (for a word write).

2.4.2.3 Round Logic

The round logic is a combinational block which performs a conventional (biased) or convergent (unbiased) round function during an accumulator write (store). The Round mode is determined by the state of the RND bit in the CORCON register. It generates a 16-bit, 1.15 data value which is passed to the data space write saturation logic. If rounding is not indicated by the instruction, a truncated 1.15 data value is stored and the least significant word (lsw) is simply discarded.

Conventional rounding takes bit 15 of the accumulator, zero-extends it and adds it to the ACCxH word (bits 16 through 31 of the accumulator). If the ACCxL word (bits 0 through 15 of the accumulator) is between 0x8000 and 0xFFFF (0x8000 included), ACCxH is incremented. If ACCxL is between 0x0000 and 0x7FFF, ACCxH is left unchanged. A consequence of this algorithm is that over a succession of random rounding operations, the value will tend to be biased slightly positive.

Convergent (or unbiased) rounding operates in the same manner as conventional rounding, except when ACCxL equals 0x8000. If this is the case, the LSb (bit 16 of the accumulator) of ACCxH is examined. If it is ‘`1`’, ACCxH is incremented. If it is ‘`0`’, ACCxH is not modified. Assuming that bit 16 is effectively random in nature, this scheme will remove any rounding bias that may accumulate.

The `SAC` and `SAC.R` instructions store either a truncated (`SAC`) or rounded (`SAC.R`) version of the contents of the target accumulator to data memory via the X bus (subject to data saturation, see **Section 2.4.2.4 “Data Space Write Saturation”**). Note that for the `MAC` class of instructions, the accumulator write back operation will function in the same manner, addressing combined MCU (X and Y) data space though the X bus. For this class of instructions, the data is always subject to rounding.

Downloaded from Arrow.com.

2.4.2.4 Data Space Write Saturation

In addition to adder/subtracter saturation, writes to data space may also be saturated but without affecting the contents of the source accumulator. The data space write saturation logic block accepts a 16-bit, 1.15 fractional value from the round logic block as its input, together with overflow status from the original source (accumulator) and the 16-bit round adder. These are combined and used to select the appropriate 1.15 fractional value as output to write to data space memory.

If the SATDW bit in the CORCON register is set, data (after rounding or truncation) is tested for overflow and adjusted accordingly, For input data greater than 0x007FFF, data written to memory is forced to the maximum positive 1.15 value, 0x7FFF. For input data less than 0xFF8000, data written to memory is forced to the maximum negative 1.15 value, 0x8000. The MSb of the source (bit 39) is used to determine the sign of the operand being tested.

If the SATDW bit in the CORCON register is not set, the input data is always passed through unmodified under all conditions.

2.4.3 BARREL SHIFTER

The barrel shifter is capable of performing up to 16-bit arithmetic or logic right shifts, or up to 16-bit left shifts in a single cycle. The source can be either of the two DSP accumulators, or the X bus (to support multi-bit shifts of register or memory data).

The shifter requires a signed binary value to determine both the magnitude (number of bits) and direction of the shift operation. A positive value will shift the operand right. A negative value will shift the operand left. A value of ‘0’ will not modify the operand.

The barrel shifter is 40 bits wide, thereby obtaining a 40-bit result for DSP shift operations and a 16-bit result for MCU shift operations. Data from the X bus is presented to the barrel shifter between bit positions 16 to 31 for right shifts, and bit positions 0 to 16 for left shifts.

© 2011 Microchip Technology Inc.

Downloaded from Arrow.com.

3.0 MEMORY ORGANIZATION

Note: This data sheet summarizes features of this group of dsPIC30F devices and is not intended to be a complete reference source. For more information on the CPU, peripherals, register descriptions and general device functionality, refer to the "*dsPIC30F Family Reference Manual*" (DS70046). For more information on the device instruction set and programming, refer to the *"16-bit MCU and DSC Programmer's Reference Manual"* (DS70157).

3.1 Program Address Space

The program address space is 4M instruction words. It is addressable by a 24-bit value from either the 23-bit PC, table instruction Effective Address (EA), or data space EA, when program space is mapped into data space as defined by Table 3-1. Note that the program space address is incremented by two between successive program words in order to provide compatibility with data space addressing.

User program space access is restricted to the lower 4M instruction word address range (0x000000 to 0x7FFFFE) for all accesses other than `TBLRD/TBLWT`, which use TBLPAG<7> to determine user or configuration space access. In Table 3-1, Program Space Address Construction, bit 23 allows access to the Device ID, the Unit ID and the configuration bits. Otherwise, bit 23 is always clear.

Note: The address map shown in Figure 3-1 and Figure 3-2 is conceptual, and the actual memory configuration may vary across individual devices depending on available memory.

Downloaded from Arrow.com.

FIGURE 3-1: PROGRAM SPACE MEMORY MAP FOR dsPIC30F6011A/6013A

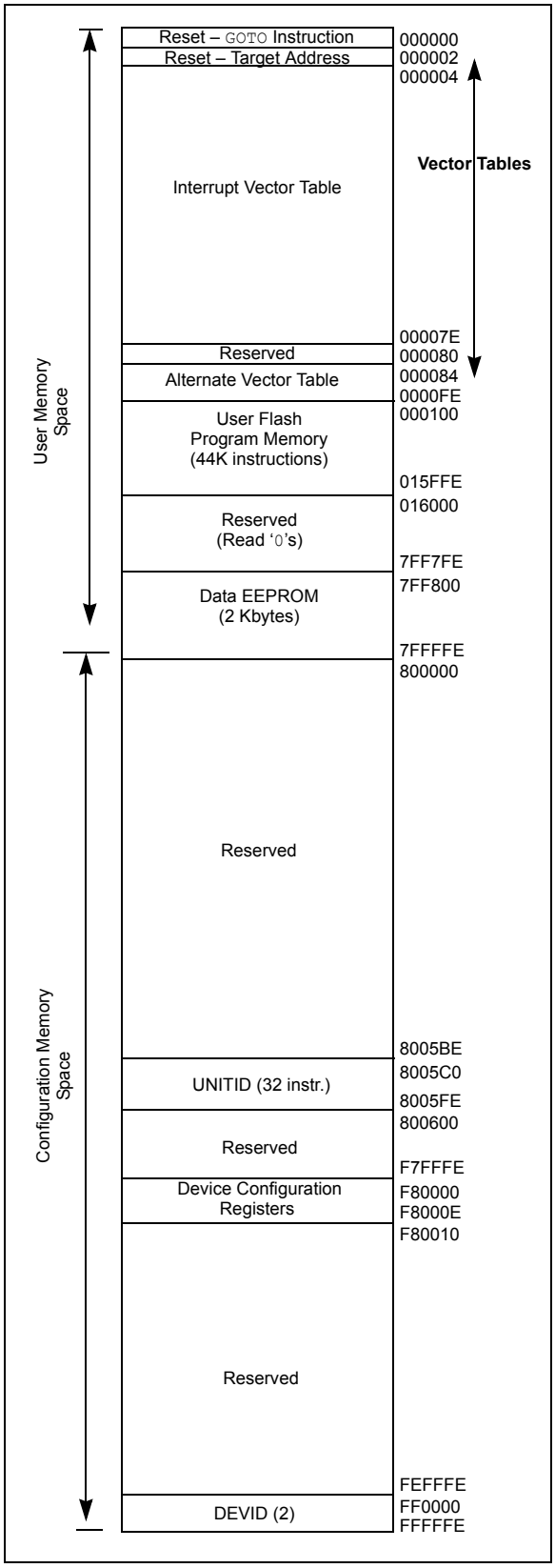

FIGURE 3-2: PROGRAM SPACE MEMORY MAP FOR dsPIC30F6012A/6014A

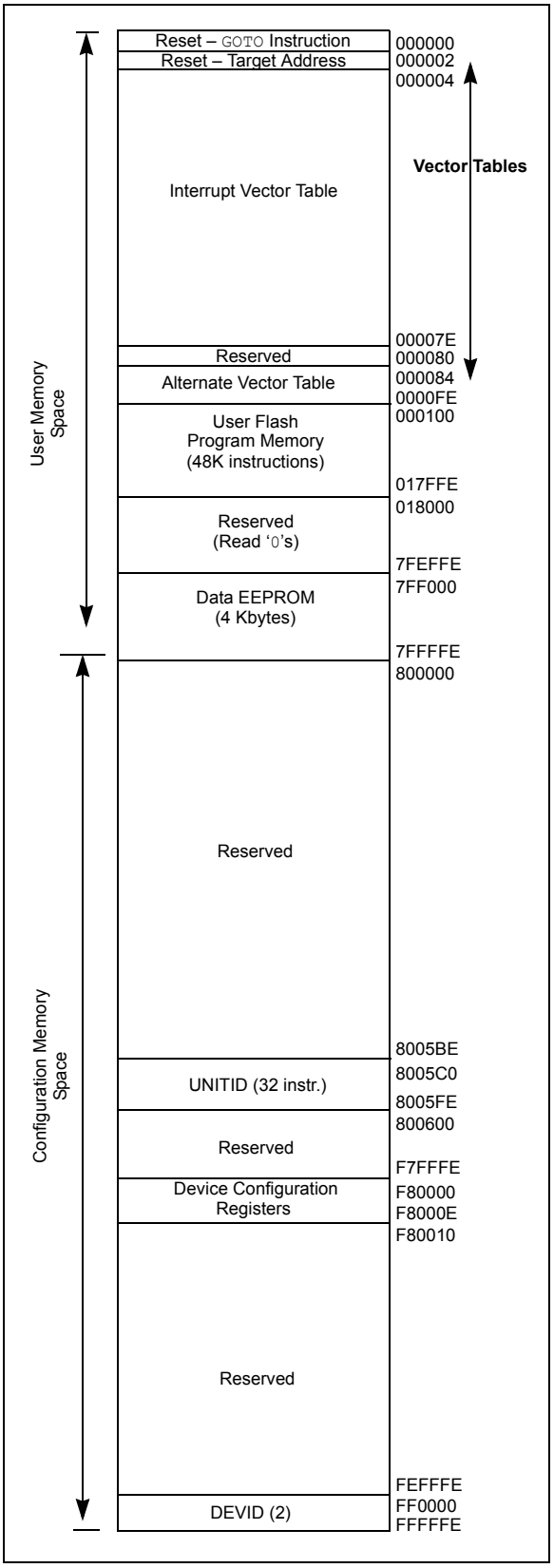

© 2011 Microchip Technology Inc.

Downloaded from Arrow.com.

TABLE 3-1: PROGRAM SPACE ADDRESS CONSTRUCTION

Access Type	Access Space	Program Space Address				
		<23>	<22:16>	<15>	<14:1>	<0>
Instruction Access	User	0	PC<22:1>			0
TBLRD/TBLWT	User (TBLPAG<7> = 0)	TBLPAG<7:0>		Data EA<15:0>		
TBLRD/TBLWT	Configuration (TBLPAG<7> = 1)	TBLPAG<7:0>		Data EA<15:0>		
Program Space Visibility	User	0	PSVPAG<7:0>		Data EA<14:0>	

FIGURE 3-3: DATA ACCESS FROM PROGRAM SPACE ADDRESS GENERATION

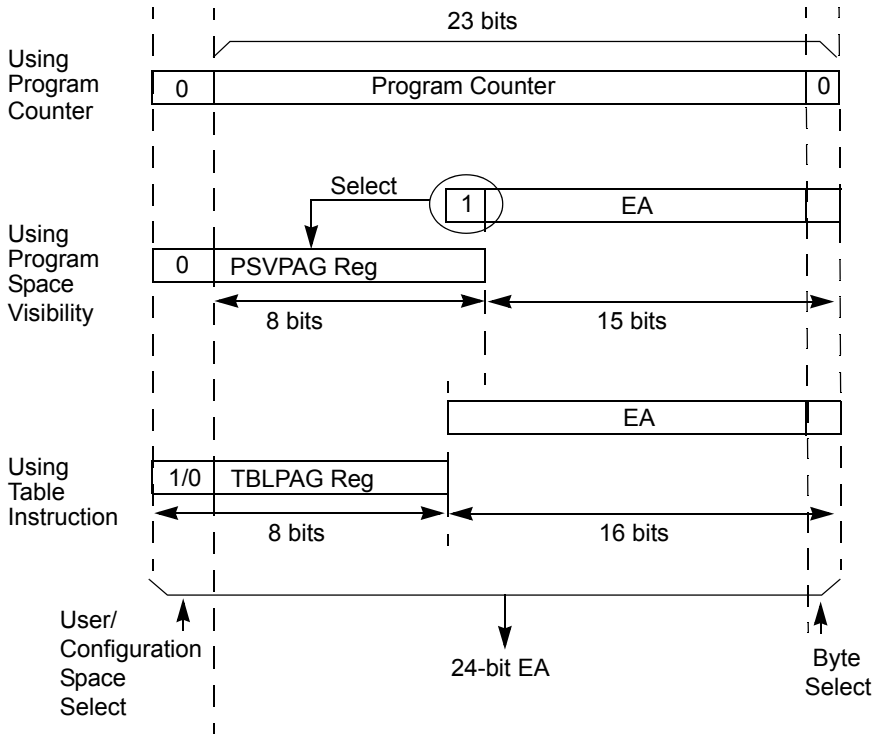

Note: Program space visibility cannot be used to access bits <23:16> of a word in program memory.

Downloaded from Arrow.com.

3.1.1 DATA ACCESS FROM PROGRAM MEMORY USING TABLE INSTRUCTIONS

This architecture fetches 24-bit wide program memory. Consequently, instructions are always aligned. However, as the architecture is modified Harvard, data can also be present in program space.

There are two methods by which program space can be accessed: via special table instructions, or through the remapping of a 16K word program space page into the upper half of data space (see **Section 3.1.2 "Data Access From Program Memory using Program Space Visibility"**). The `TBLRDL` and `TBLWTL` instructions offer a direct method of reading or writing the lsw of any address within program space, without going through data space. The `TBLRDH` and `TBLWTH` instructions are the only method whereby the upper 8 bits of a program space word can be accessed as data.

The PC is incremented by two for each successive 24-bit program word. This allows program memory addresses to directly map to data space addresses. Program memory can thus be regarded as two 16-bit word wide address spaces, residing side by side, each with the same address range. `TBLRDL` and `TBLWTL` access the space which contains the Least Significant Data Word, and `TBLRDH` and `TBLWTH` access the space which contains the Most Significant Data Byte.

Figure 3-3 shows how the EA is created for table operations and data space accesses (PSV = `1`). Here, P<23:0> refers to a program space word, whereas D<15:0> refers to a data space word.

A set of table instructions are provided to move byte or word sized data to and from program space.

1. `TBLRDL`: Table Read Low
   Word: Read the lsw of the program address; P<15:0> maps to D<15:0>.
   Byte: Read one of the LSBs of the program address;
   P<7:0> maps to the destination byte when byte select = `0`;
   P<15:8> maps to the destination byte when byte select = `1`.
2. `TBLWTL`: Table Write Low (refer to **Section 6.0 "Flash Program Memory"** for details on Flash Programming)
3. `TBLRDH`: Table Read High
   Word: Read the most significant word of the program address; P<23:16> maps to D<7:0>; D<15:8> will always be = `0`.
   Byte: Read one of the MSBs of the program address;
   P<23:16> maps to the destination byte when byte select = `0`;
   The destination byte will always be = `0` when byte select = `1`.
4. `TBLWTH`: Table Write High (refer to **Section 6.0 "Flash Program Memory"** for details on Flash Programming).

FIGURE 3-4: PROGRAM DATA TABLE ACCESS (LEAST SIGNIFICANT WORD)

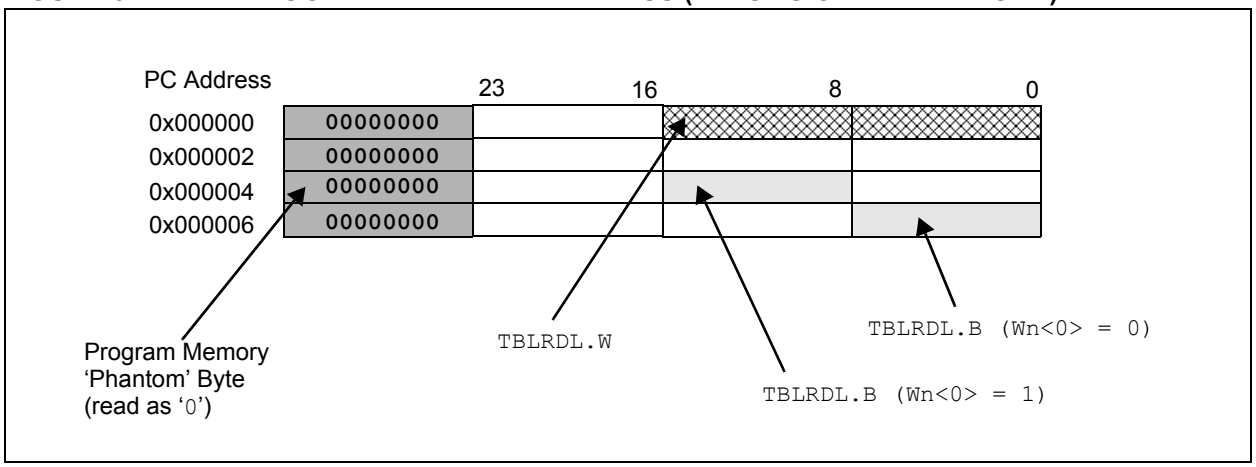

© 2011 Microchip Technology Inc.

Downloaded from Arrow.com.

FIGURE 3-5: PROGRAM DATA TABLE ACCESS (MSB)

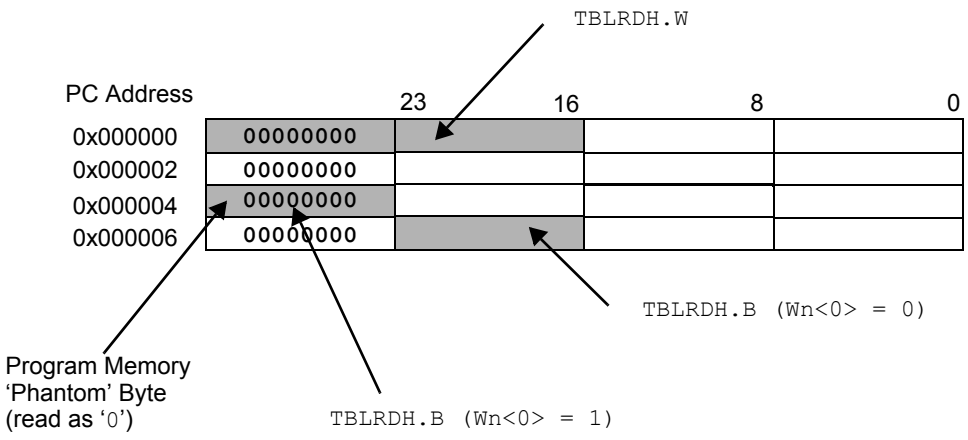

3.1.2 DATA ACCESS FROM PROGRAM MEMORY USING PROGRAM SPACE VISIBILITY

The upper 32 Kbytes of data space may optionally be mapped into any 16K word program space page. This provides transparent access of stored constant data from X data space without the need to use special instructions (i.e., TBLRDL/H, TBLWTL/H instructions).

Program space access through the data space occurs if the MSb of the data space EA is set and program space visibility is enabled by setting the PSV bit in the Core Control register (CORCON). The functions of CORCON are discussed in **Section 2.4 "DSP Engine"**.

Data accesses to this area add an additional cycle to the instruction being executed, since two program memory fetches are required.

Note that the upper half of addressable data space is always part of the X data space. Therefore, when a DSP operation uses program space mapping to access this memory region, Y data space should typically contain state (variable) data for DSP operations, whereas X data space should typically contain coefficient (constant) data.

Although each data space address, 0x8000 and higher, maps directly into a corresponding program memory address (see Figure 3-6), only the lower 16 bits of the 24-bit program word are used to contain the data. The upper 8 bits should be programmed to force an illegal instruction to maintain machine robustness. Refer to the *"16-bit MCU and DSC Programmer's Reference Manual"* (DS70157) for details on instruction encoding.

Note that by incrementing the PC by 2 for each program memory word, the Least Significant 15 bits of data space addresses directly map to the Least Significant 15 bits in the corresponding program space addresses. The remaining bits are provided by the Program Space Visibility Page register, PSVPAG<7:0>, as shown in Figure 3-6.

Note:	PSV access is temporarily disabled during table reads/writes.

For instructions that use PSV which are executed outside a REPEAT loop:

- The following instructions will require one instruction cycle in addition to the specified execution time:
  - MAC class of instructions with data operand prefetch
  - MOV instructions
  - MOV.D instructions
- All other instructions will require two instruction cycles in addition to the specified execution time of the instruction.

For instructions that use PSV which are executed inside a REPEAT loop:

- The following instances will require two instruction cycles in addition to the specified execution time of the instruction:
  - Execution in the first iteration
  - Execution in the last iteration
  - Execution prior to exiting the loop due to an interrupt
  - Execution upon re-entering the loop after an interrupt is serviced
- Any other iteration of the REPEAT loop will allow the instruction accessing data, using PSV, to execute in a single cycle.

Downloaded from Arrow.com.

FIGURE 3-6: DATA SPACE WINDOW INTO PROGRAM SPACE OPERATION

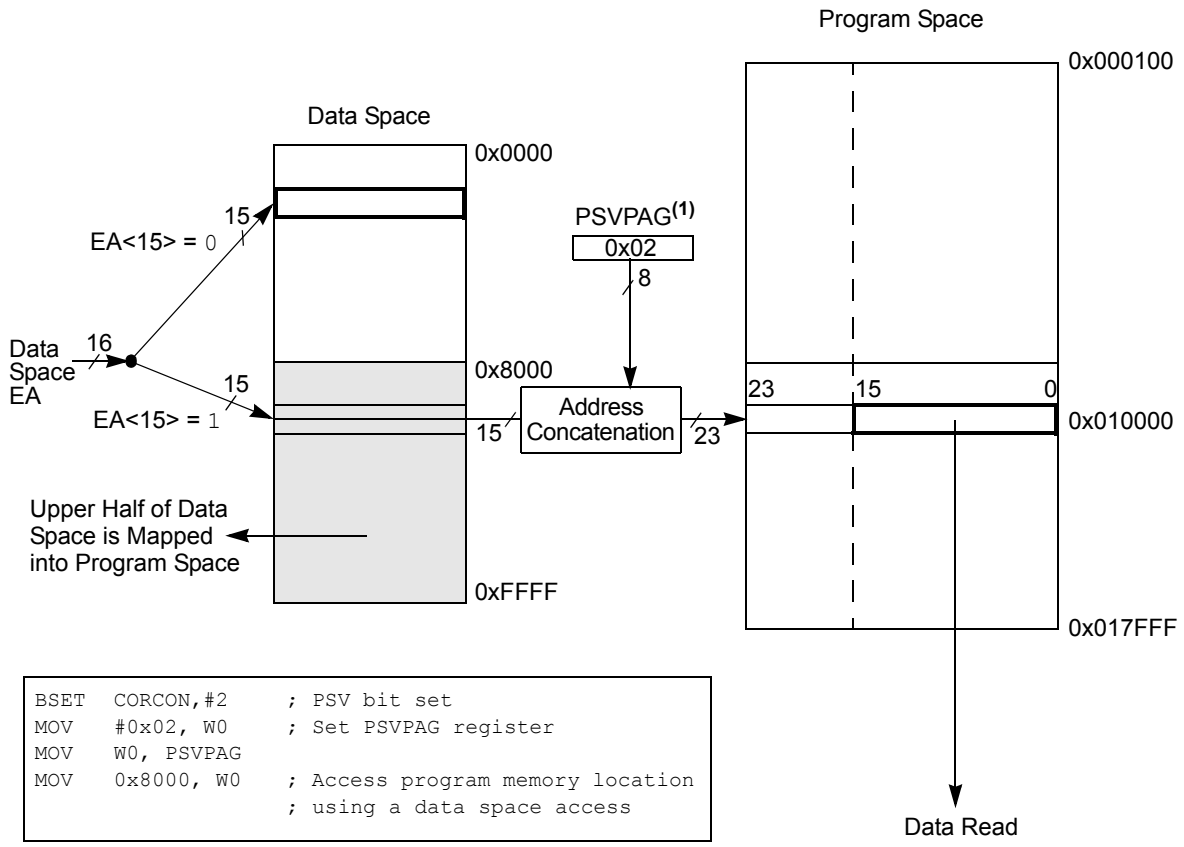


```
BSET   CORCON,#2     ; PSV bit set
MOV    #0x02, W0     ; Set PSVPAG register
MOV    W0, PSVPAG
MOV    0x8000, W0    ; Access program memory location
                     ; using a data space access
```

Note 1: PSVPAG is an 8-bit register, containing bits <22:15> of the program space address (i.e., it defines the page in program space to which the upper half of data space is being mapped).

© 2011 Microchip Technology Inc.

Downloaded from Arrow.com.

3.2 Data Address Space

The core has two data spaces. The data spaces can be considered either separate (for some DSP instructions), or as one unified linear address range (for MCU instructions). The data spaces are accessed using two Address Generation Units (AGUs) and separate data paths.

3.2.1 DATA SPACE MEMORY MAP

The data space memory is split into two blocks, X and Y data space. A key element of this architecture is that Y space is a subset of X space, and is fully contained within X space. In order to provide an apparent linear addressing space, X and Y spaces have contiguous addresses.

When executing any instruction other than one of the `MAC` class of instructions, the X block consists of the 64 Kbyte data address space (including all Y addresses). When executing one of the `MAC` class of instructions, the X block consists of the 64 Kbyte data address space excluding the Y address block (for data reads only). In other words, all other instructions regard the entire data memory as one composite address space. The `MAC` class instructions extract the Y address space from data space and address it using EAs sourced from W10 and W11. The remaining X data space is addressed using W8 and W9. Both address spaces are concurrently accessed only with the `MAC` class instructions.

The data space memory maps are shown in Figure 3-8 and Figure 3-9.

3.2.2 DATA SPACES

The X data space is used by all instructions and supports all Addressing modes. There are separate read and write data buses. The X read data bus is the return data path for all instructions that view data space as combined X and Y address space. It is also the X address space data path for the dual operand read instructions (`MAC` class). The X write data bus is the only write path to data space for all instructions.

The X data space also supports Modulo Addressing for all instructions, subject to addressing mode restrictions. Bit-Reversed Addressing is only supported for writes to X data space.

The Y data space is used in concert with the X data space by the `MAC` class of instructions (`CLR`, `ED`, `EDAC`, `MAC`, `MOVSAC`, `MPY`, `MPY.N` and `MSC`) to provide two concurrent data read paths. No writes occur across the Y bus. This class of instructions dedicates two W register pointers, W10 and W11, to always address Y data space, independent of X data space, whereas W8 and W9 always address X data space. Note that during accumulator write back, the data address space is considered a combination of X and Y data spaces, so the write occurs across the X bus. Consequently, the write can be to any address in the entire data space.

The Y data space can only be used for the data prefetch operation associated with the `MAC` class of instructions. It also supports Modulo Addressing for automated circular buffers. Of course, all other instructions can access the Y data address space through the X data path as part of the composite linear space.

The boundary between the X and Y data spaces is defined as shown in Figure 3-7 and Figure 3-8 and is not user programmable. Should an EA point to data outside its own assigned address space, or to a location outside physical memory, an all zero word/byte will be returned. For example, although Y address space is visible by all non-`MAC` instructions using any addressing mode, an attempt by a `MAC` instruction to fetch data from that space using W8 or W9 (X space pointers) will return 0x0000.

Downloaded from Arrow.com.

FIGURE 3-7: DATA SPACE MEMORY MAP FOR dsPIC30F6011A/6013A

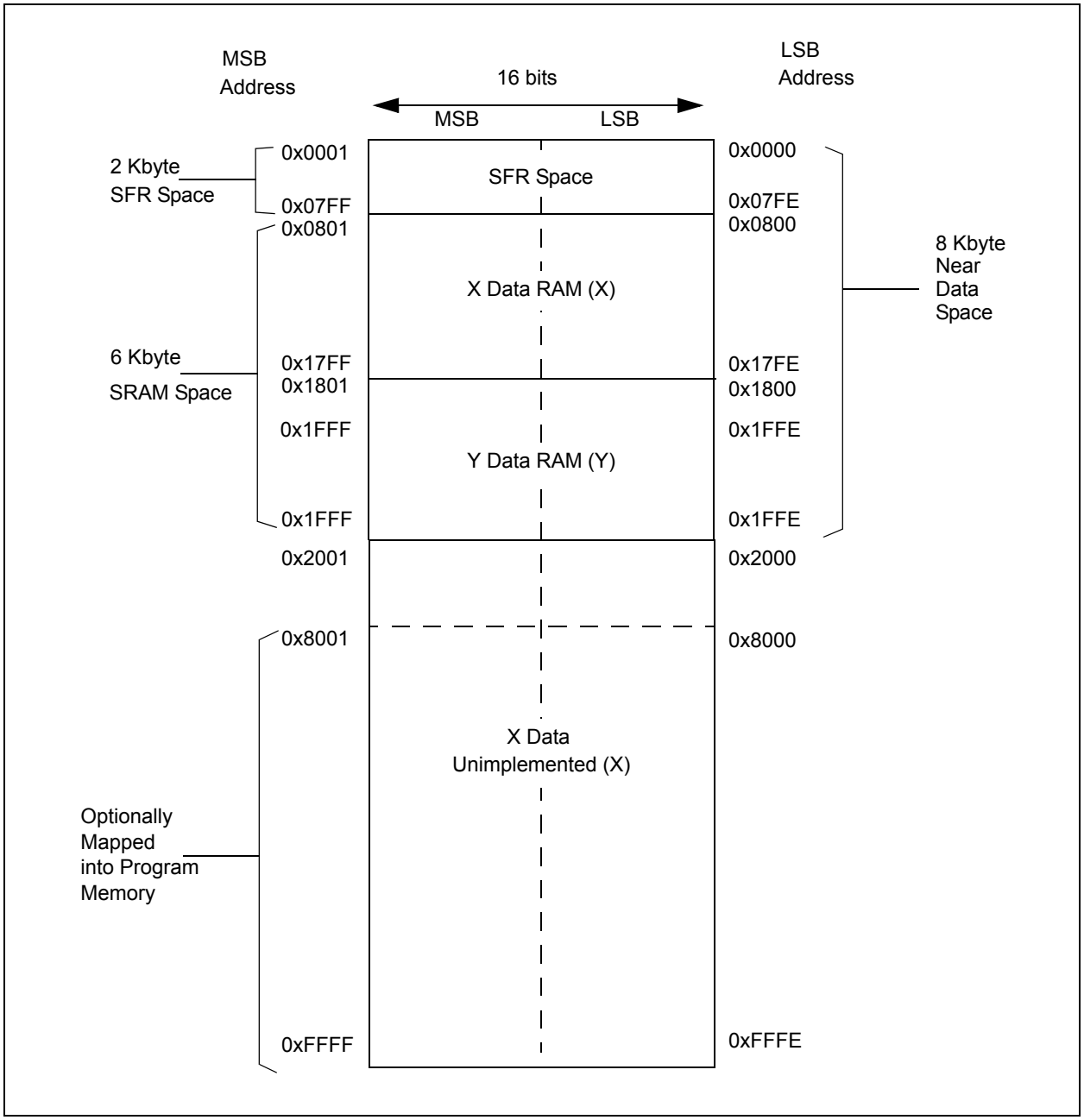

© 2011 Microchip Technology Inc.

Downloaded from Arrow.com.

FIGURE 3-8: DATA SPACE MEMORY MAP FOR dsPIC30F6012A/6014A

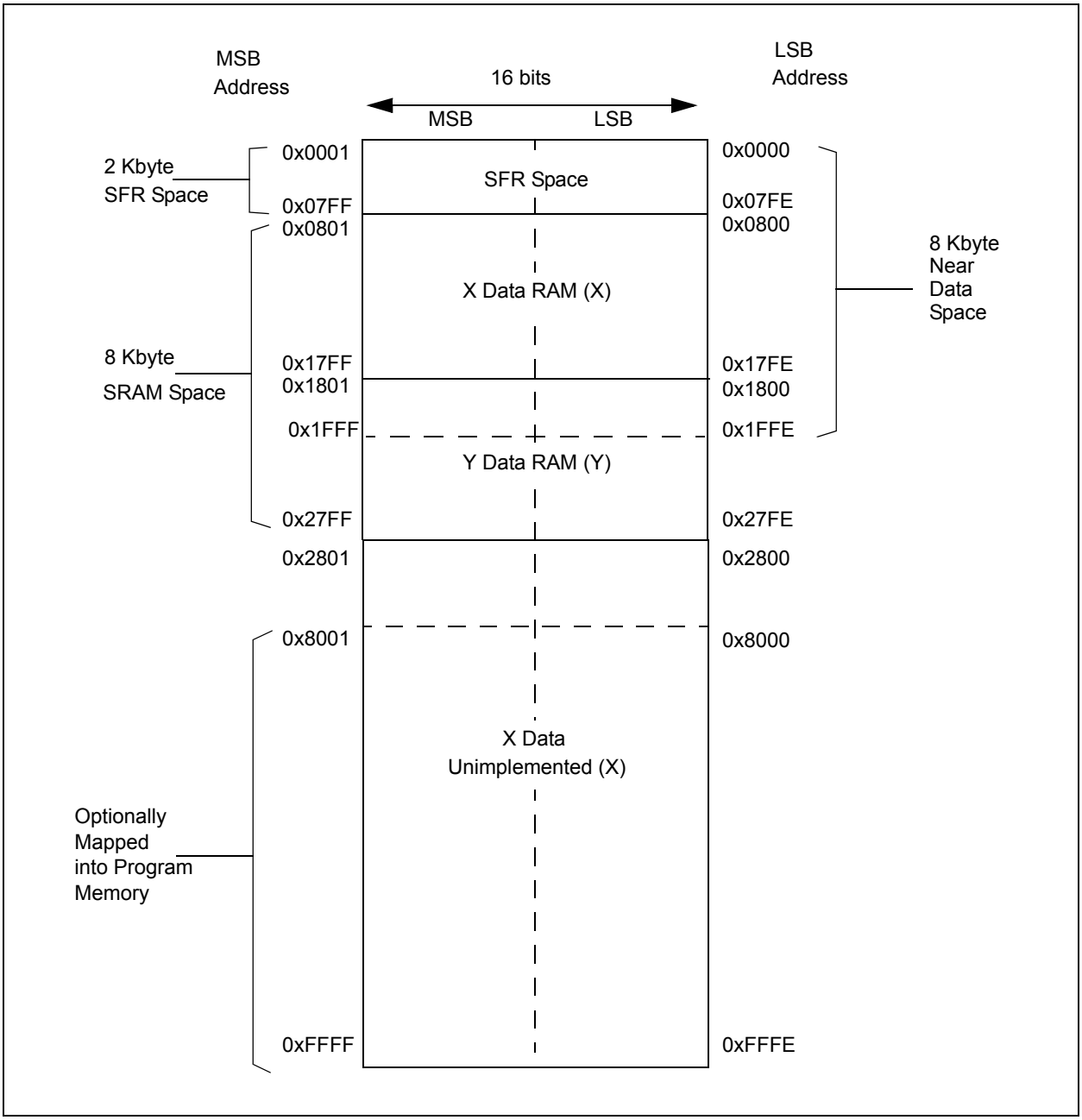

Downloaded from Arrow.com.

FIGURE 3-9: DATA SPACE FOR MCU AND DSP (MAC CLASS) INSTRUCTIONS EXAMPLE

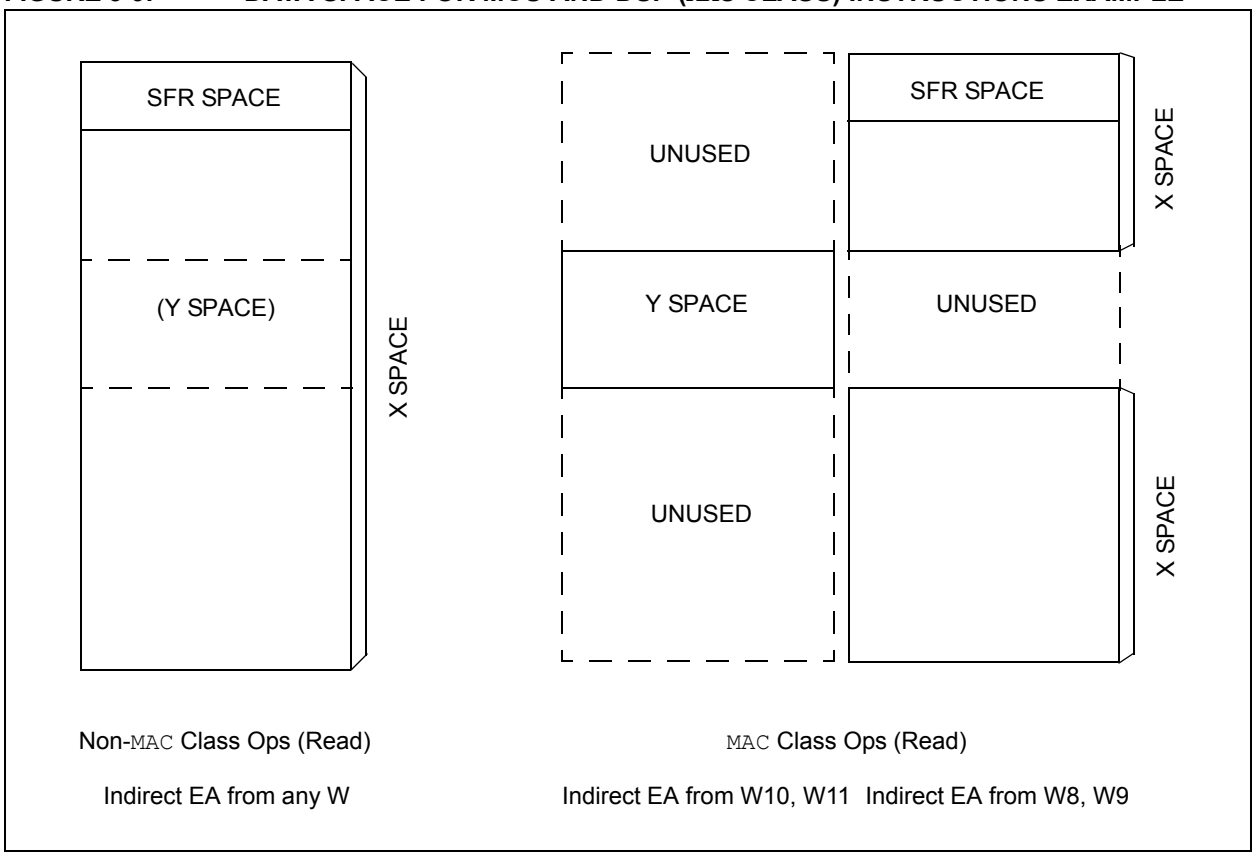

TABLE 3-2: EFFECT OF INVALID MEMORY ACCESSES

Attempted Operation	Data Returned
EA = an unimplemented address	0x0000(1)
W8 or W9 used to access Y data space in a MAC instruction	0x0000
W10 or W11 used to access X data space in a MAC instruction	0x0000

Note 1: An address error trap is generated when an unimplemented memory address is accessed.

All effective addresses are 16 bits wide and point to bytes within the data space. Therefore, the data space address range is 64 Kbytes or 32K words.

3.2.3 DATA SPACE WIDTH

The core data width is 16 bits. All internal registers are organized as 16-bit wide words. Data space memory is organized in byte addressable, 16-bit wide blocks.

3.2.4 DATA ALIGNMENT

To help maintain backward compatibility with PIC® MCU devices and improve data space memory usage efficiency, the dsPIC30F instruction set supports both word and byte operations. Data is aligned in data memory and registers as words, but all data space EAs resolve to bytes. Data byte reads will read the complete word which contains the byte, using the LSb of any EA to determine which byte to select. The selected byte is placed onto the LSB of the X data path (no byte accesses are possible from the Y data path as the MAC class of instruction can only fetch words). That is, data memory and registers are organized as two parallel byte wide entities with shared (word) address decode but separate write lines. Data byte writes only write to the corresponding side of the array or register which matches the byte address.

As a consequence of this byte accessibility, all Effective Address calculations (including those generated by the DSP operations which are restricted to word-sized data) are internally scaled to step through word aligned memory. For example, the core would recognize that Post-Modified Register Indirect Addressing mode [Ws++] will result in a value of Ws + 1 for byte operations and Ws + 2 for word operations.

© 2011 Microchip Technology Inc.

Downloaded from Arrow.com.

All word accesses must be aligned to an even address. Misaligned word data fetches are not supported so care must be taken when mixing byte and word operations, or translating from 8-bit MCU code. Should a misaligned read or write be attempted, an address error trap will be generated. If the error occurred on a read, the instruction underway is completed, whereas if it occurred on a write, the instruction will be executed but the write will not occur. In either case, a trap will then be executed, allowing the system and/or user to examine the machine state prior to execution of the address fault.

FIGURE 3-10: DATA ALIGNMENT

	15 MSB	8 7 LSB 0	
0001	Byte1	Byte 0	0000
0003	Byte3	Byte 2	0002
0005	Byte5	Byte 4	0004

All byte loads into any W register are loaded into the LSB. The MSB is not modified.

A sign-extend (SE) instruction is provided to allow users to translate 8-bit signed data to 16-bit signed values. Alternatively, for 16-bit unsigned data, users can clear the MSB of any W register by executing a zero-extend (ZE) instruction on the appropriate address.

Although most instructions are capable of operating on word or byte data sizes, it should be noted that some instructions, including the DSP instructions, operate only on words.

3.2.5 NEAR DATA SPACE

An 8 Kbyte ‘near’ data space is reserved in X address memory space between 0x0000 and 0x1FFF, which is directly addressable via a 13-bit absolute address field within all memory direct instructions. The remaining X address space and all of the Y address space is addressable indirectly. Additionally, the whole of X data space is addressable using MOV instructions, which support memory direct addressing with a 16-bit address field.

3.2.6 SOFTWARE STACK

The dsPIC DSC devices contain a software stack. W15 is used as the Stack Pointer.

The Stack Pointer always points to the first available free word and grows from lower addresses towards higher addresses. It pre-decrements for stack pops and post-increments for stack pushes as shown in Figure 3-11. Note that for a PC push during any CALL instruction, the MSB of the PC is zero-extended before the push, ensuring that the MSB is always clear.

> **Note:** A PC push during exception processing will concatenate the SRL register to the MSB of the PC prior to the push.

There is a Stack Pointer Limit register (SPLIM) associated with the Stack Pointer. SPLIM is uninitialized at Reset. As is the case for the Stack Pointer, SPLIM<0> is forced to ‘0’ because all stack operations must be word aligned. Whenever an Effective Address (EA) is generated using W15 as a source or destination pointer, the address thus generated is compared with the value in SPLIM. If the contents of the Stack Pointer (W15) and the SPLIM register are equal and a push operation is performed, a Stack Error Trap will not occur. The Stack Error Trap will occur on a subsequent push operation. Thus, for example, if it is desirable to cause a Stack Error Trap when the stack grows beyond address 0x2000 in RAM, initialize the SPLIM with the value, 0x1FFE.

Similarly, a Stack Pointer underflow (stack error) trap is generated when the Stack Pointer address is found to be less than 0x0800, thus preventing the stack from interfering with the Special Function Register (SFR) space.

A write to the SPLIM register should not be immediately followed by an indirect read operation using W15.

FIGURE 3-11: CALL STACK FRAME

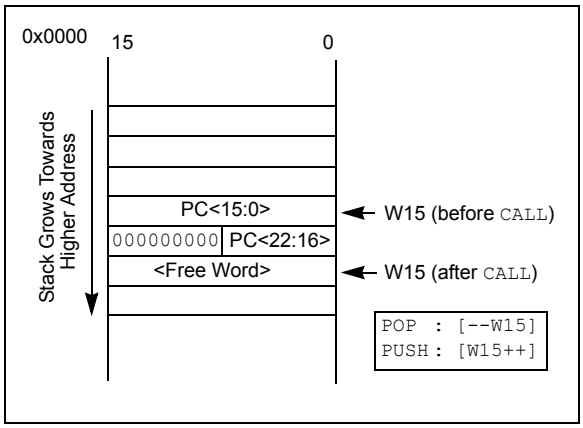

Downloaded from Arrow.com.

3.2.7 DATA RAM PROTECTION FEATURE

The dsPIC30F6011A/6012A/6013A/6014A devices support data RAM protection features which enable segments of RAM to be protected when used in conjunction with Boot and Secure Code Segment Security. BSRAM (Secure RAM segment for BS) is accessible only from the Boot Segment Flash code when enabled. SSRAM (Secure RAM segment for RAM) is accessible only from the Secure Segment Flash code when enabled.

See Table 3-3 for an overview of the BSRAM and SSRAM SFRs.

© 2011 Microchip Technology Inc.

Downloaded from Arrow.com.

TABLE 3-3: CORE REGISTER MAP(1)

SFR Name	Address (Home)	Bit 15	Bit 14	Bit 13	Bit 12	Bit 11	Bit 10	Bit 9	Bit 8	Bit 7	Bit 6	Bit 5	Bit 4	Bit 3	Bit 2	Bit 1	Bit 0	Reset State
W0	0000	W0 / WREG																0000 0000 0000 0000
W1	0002	W1																0000 0000 0000 0000
W2	0004	W2																0000 0000 0000 0000
W3	0006	W3																0000 0000 0000 0000
W4	0008	W4																0000 0000 0000 0000
W5	000A	W5																0000 0000 0000 0000
W6	000C	W6																0000 0000 0000 0000
W7	000E	W7																0000 0000 0000 0000
W8	0010	W8																0000 0000 0000 0000
W9	0012	W9																0000 0000 0000 0000
W10	0014	W10																0000 0000 0000 0000
W11	0016	W11																0000 0000 0000 0000
W12	0018	W12																0000 0000 0000 0000
W13	001A	W13																0000 0000 0000 0000
W14	001C	W14																0000 0000 0000 0000
W15	001E	W15																0000 1000 0000 0000
SPLIM	0020	SPLIM																0000 0000 0000 0000
ACCAL	0022	ACCAL																0000 0000 0000 0000
ACCAH	0024	ACCAH																0000 0000 0000 0000
ACCAU	0026	Sign-Extension (ACCA<39>)								ACCAU								0000 0000 0000 0000
ACCBL	0028	ACCBL																0000 0000 0000 0000
ACCBH	002A	ACCBH																0000 0000 0000 0000
ACCBU	002C	Sign-Extension (ACCB<39>)								ACCBU								0000 0000 0000 0000
PCL	002E	PCL																0000 0000 0000 0000
PCH	0030	—	—	—	—	—	—	—	—	—	PCH							0000 0000 0000 0000
TBLPAG	0032	—	—	—	—	—	—	—	—	TBLPAG								0000 0000 0000 0000
PSVPAG	0034	—	—	—	—	—	—	—	—	PSVPAG								0000 0000 0000 0000
RCOUNT	0036	RCOUNT																uuuu uuuu uuuu uuuu
DCOUNT	0038	DCOUNT																uuuu uuuu uuuu uuuu
DOSTARTL	003A	DOSTARTL															0	uuuu uuuu uuuu uuu0
DOSTARTH	003C	—	—	—	—	—	—	—	—	—	DOSTARTH							0000 0000 0uuu uuuu
DOENDL	003E	DOENDL															0	uuuu uuuu uuuu uuu0
DOENDH	0040	—	—	—	—	—	—	—	—	—	DOENDH							0000 0000 0uuu uuuu

Legend: u = uninitialized bit; — = unimplemented bit, read as '0'

Note 1: Refer to the *"dsPIC30F Family Reference Manual"* (DS70046) for descriptions of register bit fields.

Downloaded from Arrow.com.

TABLE 3-3: CORE REGISTER MAP(1) (CONTINUED)

SFR Name	Address (Home)	Bit 15	Bit 14	Bit 13	Bit 12	Bit 11	Bit 10	Bit 9	Bit 8	Bit 7	Bit 6	Bit 5	Bit 4	Bit 3	Bit 2	Bit 1	Bit 0	Reset State
SR	0042	OA	OB	SA	SB	OAB	SAB	DA	DC	IPL2	IPL1	IPL0	RA	N	OV	Z	C	0000 0000 0000 0000
CORCON	0044	—	—	—	US	EDT	DL2	DL1	DL0	SATA	SATB	SATDW	ACCSAT	IPL3	PSV	RND	IF	0000 0000 0010 0000
MODCON	0046	XMODEN	YMODEN	—	—	BWM<3:0>				YWM<3:0>				XWM<3:0>				0000 0000 0000 0000
XMODSRT	0048	XS<15:1>															0	uuuu uuuu uuuu uuu0
XMODEND	004A	XE<15:1>															1	uuuu uuuu uuuu uuu1
YMODSRT	004C	YS<15:1>															0	uuuu uuuu uuuu uuu0
YMODEND	004E	YE<15:1>															1	uuuu uuuu uuuu uuu1
XBREV	0050	BREN	XB<14:0>															uuuu uuuu uuuu uuuu
DISICNT	0052	—	—	DISICNT<13:0>														0000 0000 0000 0000
BSRAM	0750	—	—	—	—	—	—	—	—	—	—	—	—	—	IW_BSR	IR_BSR	RL_BSR	0000 0000 0000 0000
SSRAM	0752	—	—	—	—	—	—	—	—	—	—	—	—	—	IW_SSR	IR_SSR	RL_SSR	0000 0000 0000 0000

Legend: u = uninitialized bit; — = unimplemented bit, read as '0'

Note 1: Refer to the *"dsPIC30F Family Reference Manual"* (DS70046) for descriptions of register bit fields.

© 2011 Microchip Technology Inc.

Downloaded from Arrow.com.

4.0 ADDRESS GENERATOR UNITS

Note: This data sheet summarizes features of this group of dsPIC30F devices and is not intended to be a complete reference source. For more information on the CPU, peripherals, register descriptions and general device functionality, refer to the "*dsPIC30F Family Reference Manual*" (DS70046). For more information on the device instruction set and programming, refer to the *"16-bit MCU and DSC Programmer's Reference Manual"* (DS70157).

The dsPIC DSC core contains two independent address generator units: the X AGU and Y AGU. The Y AGU supports word sized data reads for the DSP `MAC` class of instructions only. The dsPIC30F AGUs support:

- Linear Addressing
- Modulo (Circular) Addressing
- Bit-Reversed Addressing

Linear and Modulo Data Addressing modes can be applied to data space or program space. Bit-Reversed Addressing is only applicable to data space addresses.

4.1 Instruction Addressing Modes

The Addressing modes in Table 4-1 form the basis of the Addressing modes optimized to support the specific features of individual instructions. The Addressing modes provided in the `MAC` class of instructions are somewhat different from those in the other instruction types.

4.1.1 FILE REGISTER INSTRUCTIONS

Most File register instructions use a 13-bit address field (f) to directly address data present in the first 8192 bytes of data memory (Near data space). Most File register instructions employ a working register, W0, which is denoted as WREG in these instructions. The destination is typically either the same File register or WREG (with the exception of the `MUL` instruction), which writes the result to a register or register pair. The `MOV` instruction allows additional flexibility and can access the entire data space.

4.1.2 MCU INSTRUCTIONS

The three-operand MCU instructions are of the form:

```
Operand 3 = Operand 1 <function> Operand 2
```

where:

`Operand 1` is always a working register (i.e., the Addressing mode can only be Register Direct) which is referred to as Wb.

`Operand 2` can be a W register, fetched from data memory or a 5-bit literal. The result location can be either a W register or a data memory location. The following addressing modes are supported by MCU instructions:

- Register Direct
- Register Indirect
- Register Indirect Post-modified
- Register Indirect Pre-modified
- 5-bit or 10-bit Literal

Note: Not all instructions support all the addressing modes given above. Individual instructions may support different subsets of these addressing modes.

TABLE 4-1: FUNDAMENTAL ADDRESSING MODES SUPPORTED

Addressing Mode	Description
File Register Direct	The address of the File register is specified explicitly.
Register Direct	The contents of a register are accessed directly.
Register Indirect	The contents of Wn forms the EA.
Register Indirect Post-modified	The contents of Wn forms the EA. Wn is post-modified (incremented or decremented) by a constant value.
Register Indirect Pre-modified	Wn is pre-modified (incremented or decremented) by a signed constant value to form the EA.
Register Indirect with Register Offset	The sum of Wn and Wb forms the EA.
Register Indirect with Literal Offset	The sum of Wn and a literal forms the EA.

Downloaded from Arrow.com.

4.1.3 MOVE AND ACCUMULATOR INSTRUCTIONS

Move instructions and the DSP accumulator class of instructions provide a greater degree of addressing flexibility than other instructions. In addition to the Addressing modes supported by most MCU instructions, move and accumulator instructions also support Register Indirect with Register Offset Addressing mode, also referred to as Register Indexed mode.

Note: For the `MOV` instructions, the addressing mode specified in the instruction can differ for the source and destination EA. However, the 4-bit Wb (register offset) field is shared between both source and destination (but typically only used by one).

In summary, the following Addressing modes are supported by move and accumulator instructions:

- Register Direct
- Register Indirect
- Register Indirect Post-modified
- Register Indirect Pre-modified
- Register Indirect with Register Offset (Indexed)
- Register Indirect with Literal Offset
- 8-bit Literal
- 16-bit Literal

Note: Not all instructions support all the Addressing modes given above. Individual instructions may support different subsets of these Addressing modes.

4.1.4 `MAC` INSTRUCTIONS

The dual source operand DSP instructions (`CLR`, `ED`, `EDAC`, `MAC`, `MPY`, `MPY.N`, `MOVSAC` and `MSC`), also referred to as `MAC` instructions, utilize a simplified set of Addressing modes to allow the user to effectively manipulate the data pointers through register indirect tables.

The two source operand prefetch registers must be a member of the set {W8, W9, W10, W11}. For data reads, W8 and W9 will always be directed to the X RAGU and W10 and W11 will always be directed to the Y AGU. The effective addresses generated (before and after modification) must, therefore, be valid addresses within X data space for W8 and W9 and Y data space for W10 and W11.

Note: Register indirect with register offset addressing is only available for W9 (in X space) and W11 (in Y space).

In summary, the following Addressing modes are supported by the `MAC` class of instructions:

- Register Indirect
- Register Indirect Post-modified by 2
- Register Indirect Post-modified by 4
- Register Indirect Post-modified by 6
- Register Indirect with Register Offset (Indexed)

4.1.5 OTHER INSTRUCTIONS

Besides the various Addressing modes outlined above, some instructions use literal constants of various sizes. For example, `BRA` (branch) instructions use 16-bit signed literals to specify the branch destination directly, whereas the `DISI` instruction uses a 14-bit unsigned literal field. In some instructions, such as `ADD Acc`, the source of an operand or result is implied by the opcode itself. Certain operations, such as `NOP`, do not have any operands.

4.2 Modulo Addressing

Modulo Addressing is a method of providing an automated means to support circular data buffers using hardware. The objective is to remove the need for software to perform data address boundary checks when executing tightly looped code, as is typical in many DSP algorithms.

Modulo Addressing can operate in either data or program space (since the data pointer mechanism is essentially the same for both). One circular buffer can be supported in each of the X (which also provides the pointers into program space) and Y data spaces. Modulo Addressing can operate on any W register pointer. However, it is not advisable to use W14 or W15 for Modulo Addressing since these two registers are used as the Stack Frame Pointer and Stack Pointer, respectively.

In general, any particular circular buffer can only be configured to operate in one direction, as there are certain restrictions on the buffer start address (for incrementing buffers), or end address (for decrementing buffers) based upon the direction of the buffer.

The only exception to the usage restrictions is for buffers which have a power-of-2 length. As these buffers satisfy the start and end address criteria, they may operate in a Bidirectional mode (i.e., address boundary checks will be performed on both the lower and upper address boundaries).

© 2011 Microchip Technology Inc.

Downloaded from Arrow.com.

4.2.1 START AND END ADDRESS

The Modulo Addressing scheme requires that a starting and an ending address be specified and loaded into the 16-bit Modulo Buffer Address registers: XMODSRT, XMODEND, YMODSRT, YMODEND (see Table 3-3).

> **Note:** Y space Modulo Addressing EA calculations assume word sized data (LSb of every EA is always clear).

The length of a circular buffer is not directly specified. It is determined by the difference between the corresponding start and end addresses. The maximum possible length of the circular buffer is 32K words (64 Kbytes).

4.2.2 W ADDRESS REGISTER SELECTION

The Modulo and Bit-Reversed Addressing Control register MODCON<15:0> contains enable flags as well as a W register field to specify the W address registers. The XWM and YWM fields select which registers will operate with Modulo Addressing. If XWM = `15`, X RAGU and X WAGU Modulo Addressing is disabled. Similarly, if YWM = `15`, Y AGU Modulo Addressing is disabled.

The X Address Space Pointer W register (XWM), to which Modulo Addressing is to be applied, is stored in MODCON<3:0> (see Table 3-3). Modulo Addressing is enabled for X data space when XWM is set to any value other than '`15`' and the XMODEN bit is set at MODCON<15>.

The Y Address Space Pointer W register (YWM), to which Modulo Addressing is to be applied, is stored in MODCON<7:4>. Modulo Addressing is enabled for Y data space when YWM is set to any value other than '`15`' and the YMODEN bit is set at MODCON<14>.

FIGURE 4-1: MODULO ADDRESSING OPERATION EXAMPLE

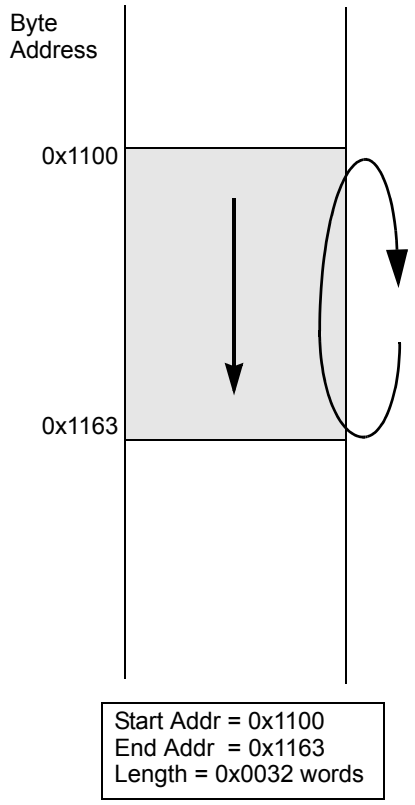


```
MOV    #0x1100,W0
MOV    W0,XMODSRT    ;set modulo start address
MOV    #0x1163,W0
MOV    W0,MODEND     ;set modulo end address
MOV    #0x8001,W0
MOV    W0,MODCON     ;enable W1, X AGU for modulo

MOV    #0x0000,W0    ;W0 holds buffer fill value

MOV    #0x1110,W1    ;point W1 to buffer

DO     AGAIN,#0x31   ;fill the 50 buffer locations
MOV    W0,[W1++]     ;fill the next location
```


Downloaded from Arrow.com.

4.2.3 MODULO ADDRESSING APPLICABILITY

Modulo Addressing can be applied to the Effective Address calculation associated with any W register. It is important to realize that the address boundaries check for addresses less than, or greater than the upper (for incrementing buffers), and lower (for decrementing buffers) boundary addresses (not just equal to). Address changes may, therefore, jump beyond boundaries and still be adjusted correctly.

Note:	The modulo corrected Effective Address is written back to the register only when Pre-Modify or Post-Modify Addressing mode is used to compute the Effective Address. When an address offset (e.g., [W7+W2]) is used, modulo address correction is performed but the contents of the register remain unchanged.

4.3 Bit-Reversed Addressing

Bit-Reversed Addressing is intended to simplify data re-ordering for radix-2 FFT algorithms. It is supported by the X AGU for data writes only.

The modifier, which may be a constant value or register contents, is regarded as having its bit order reversed. The address source and destination are kept in normal order. Thus, the only operand requiring reversal is the modifier.

4.3.1 BIT-REVERSED ADDRESSING IMPLEMENTATION

Bit-Reversed Addressing is enabled when:

1. BWM (W register selection) in the MODCON register is any value other than '15' (the stack cannot be accessed using Bit-Reversed Addressing) **and**
2. the BREN bit is set in the XBREV register **and**
3. the Addressing mode used is Register Indirect with Pre-Increment or Post-Increment.

If the length of a bit-reversed buffer is $M = 2^N$ bytes, then the last 'N' bits of the data buffer start address must be zeros.

XB<14:0> is the bit-reversed address modifier or 'pivot point', which is typically a constant. In the case of an FFT computation, its value is equal to half of the FFT data buffer size.

Note:	All bit-reversed EA calculations assume word sized data (LSb of every EA is always clear). The XB value is scaled accordingly to generate compatible (byte) addresses.

When enabled, Bit-Reversed Addressing will only be executed for register indirect with pre-increment or post-increment addressing and word sized data writes. It will not function for any other addressing mode or for byte sized data, and normal addresses will be generated instead. When Bit-Reversed Addressing is active, the W address pointer will always be added to the address modifier (XB) and the offset associated with the Register Indirect Addressing mode will be ignored. In addition, as word sized data is a requirement, the LSb of the EA is ignored (and always clear).

Note:	Modulo Addressing and Bit-Reversed Addressing should not be enabled together. In the event that the user attempts to do this, Bit-Reversed Addressing will assume priority when active for the X WAGU, and X WAGU Modulo Addressing will be disabled. However, Modulo Addressing will continue to function in the X RAGU.

If Bit-Reversed Addressing has already been enabled by setting the BREN (XBREV<15>) bit, then a write to the XBREV register should not be immediately followed by an indirect read operation using the W register that has been designated as the bit-reversed pointer.

© 2011 Microchip Technology Inc.

Downloaded from Arrow.com.

FIGURE 4-2: BIT-REVERSED ADDRESS EXAMPLE

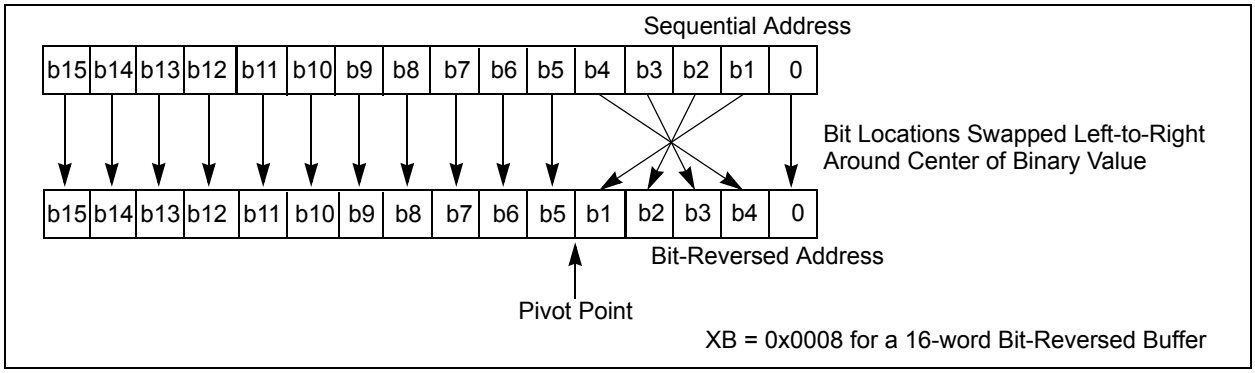

TABLE 4-2: BIT-REVERSED ADDRESS SEQUENCE (16-ENTRY)

Normal Address					Bit-Reversed Address				
A3	A2	A1	A0	Decimal	A3	A2	A1	A0	Decimal
0	0	0	0	0	0	0	0	0	0
0	0	0	1	1	1	0	0	0	8
0	0	1	0	2	0	1	0	0	4
0	0	1	1	3	1	1	0	0	12
0	1	0	0	4	0	0	1	0	2
0	1	0	1	5	1	0	1	0	10
0	1	1	0	6	0	1	1	0	6
0	1	1	1	7	1	1	1	0	14
1	0	0	0	8	0	0	0	1	1
1	0	0	1	9	1	0	0	1	9
1	0	1	0	10	0	1	0	1	5
1	0	1	1	11	1	1	0	1	13
1	1	0	0	12	0	0	1	1	3
1	1	0	1	13	1	0	1	1	11
1	1	1	0	14	0	1	1	1	7
1	1	1	1	15	1	1	1	1	15

TABLE 4-3: BIT-REVERSED ADDRESS MODIFIER VALUES FOR XBREV REGISTER

Buffer Size (Words)	XB<14:0> Bit-Reversed Address Modifier Value
4096	0x0800
2048	0x0400
1024	0x0200
512	0x0100
256	0x0080
128	0x0040
64	0x0020
32	0x0010
16	0x0008
8	0x0004
4	0x0002
2	0x0001

Downloaded from Arrow.com.

NOTES:

© 2011 Microchip Technology Inc.

Downloaded from Arrow.com.

5.0 INTERRUPTS

Note: This data sheet summarizes features of this group of dsPIC30F devices and is not intended to be a complete reference source. For more information on the CPU, peripherals, register descriptions and general device functionality, refer to the "*dsPIC30F Family Reference Manual*" (DS70046). For more information on the device instruction set and programming, refer to the *"16-bit MCU and DSC Programmer's Reference Manual"* (DS70157).

The dsPIC30F Sensor and General Purpose Family has up to 41 interrupt sources and 4 processor exceptions (traps) which must be arbitrated based on a priority scheme.

The CPU is responsible for reading the Interrupt Vector Table (IVT) and transferring the address contained in the interrupt vector to the Program Counter. The interrupt vector is transferred from the program data bus into the Program Counter via a 24-bit wide multiplexer on the input of the Program Counter.

The Interrupt Vector Table (IVT) and Alternate Interrupt Vector Table (AIVT) are placed near the beginning of program memory (0x000004). The IVT and AIVT are shown in Table 5-1.

The interrupt controller is responsible for pre-processing the interrupts and processor exceptions prior to them being presented to the processor core. The peripheral interrupts and traps are enabled, prioritized and controlled using centralized Special Function Registers:

- IFS0<15:0>, IFS1<15:0>, IFS2<15:0>
  All interrupt request flags are maintained in these three registers. The flags are set by their respective peripherals or external signals, and they are cleared via software.
- IEC0<15:0>, IEC1<15:0>, IEC2<15:0>
  All interrupt enable control bits are maintained in these three registers. These control bits are used to individually enable interrupts from the peripherals or external signals.
- IPC0<15:0>... IPC10<7:0>
  The user assignable priority level associated with each of these 41 interrupts is held centrally in these twelve registers.
- IPL<3:0>
  The current CPU priority level is explicitly stored in the IPL bits. IPL<3> is present in the CORCON register, whereas IPL<2:0> are present in the STATUS register (SR) in the processor core.
- INTTREG<15:0>
  The associated interrupt vector number and the new CPU interrupt priority level are latched into vector number (VECNUM<5:0>) and Interrupt level (ILR<3:0>) bit fields in the INTTREG register. The new interrupt priority level is the priority of the pending interrupt.
- INTCON1<15:0>, INTCON2<15:0>
  Global interrupt control functions are derived from these two registers. INTCON1 contains the control and status flags for the processor exceptions. The INTCON2 register controls the external interrupt request signal behavior and the use of the alternate vector table.

Note: Interrupt flag bits get set when an interrupt condition occurs, regardless of the state of its corresponding enable bit. User software should ensure the appropriate interrupt flag bits are clear prior to enabling an interrupt.

All interrupt sources can be user assigned to one of 7 priority levels, 1 through 7, via the IPCx registers. Each interrupt source is associated with an interrupt vector, as shown in Table 5-1. Levels 7 and 1 represent the highest and lowest maskable priorities, respectively.

Note: Assigning a priority level of '0' to an interrupt source is equivalent to disabling that interrupt.

If the NSTDIS bit (INTCON1<15>) is set, nesting of interrupts is prevented. Thus, if an interrupt is currently being serviced, processing of a new interrupt is prevented even if the new interrupt is of higher priority than the one currently being serviced.

Note: The IPL bits become read only whenever the NSTDIS bit has been set to '1'.

Certain interrupts have specialized control bits for features like edge or level triggered interrupts, interrupt-on-change, etc. Control of these features remains within the peripheral module which generates the interrupt.

The `DISI` instruction can be used to disable the processing of interrupts of priorities 6 and lower for a certain number of instructions, during which the DISI bit (INTCON2<14>) remains set.

When an interrupt is serviced, the PC is loaded with the address stored in the vector location in program memory that corresponds to the interrupt. There are 63 different vectors within the IVT (refer to Table 5-1). These vectors are contained in locations 0x000004 through 0x0000FE of program memory (refer to Table 5-1). These locations contain 24-bit addresses and in order to preserve robustness, an address error trap will take place should the PC attempt to fetch any of these words during normal execution. This prevents execution of random data as a result of accidentally decrementing a PC into vector space, accidentally mapping a data space address into vector space, or the PC rolling over to 0x000000 after reaching the end of implemented program memory space. Execution of a `GOTO` instruction to this vector space will also generate an address error trap.

Downloaded from Arrow.com.

5.1 Interrupt Priority

The user-assignable interrupt priority (IP<2:0>) bits for each individual interrupt source are located in the Least Significant 3 bits of each nibble within the IPCx register(s). Bit 3 of each nibble is not used and is read as a '0'. These bits define the priority level assigned to a particular interrupt by the user.

> **Note:** The user-assignable priority levels start at 0 as the lowest priority and level 7 as the highest priority.

Since more than one interrupt request source may be assigned to a specific user-assigned priority level, a means is provided to assign priority within a given level. This method is called "Natural Order Priority" and is final.

Natural order priority is determined by the position of an interrupt in the vector table, and only affects interrupt operation when multiple interrupts with the same user-assigned priority become pending at the same time.

Table 5-1 lists the interrupt numbers and interrupt sources for the dsPIC DSC device and their associated vector numbers.

> **Note 1:** The natural order priority scheme has 0 as the highest priority and 53 as the lowest priority.
>
> **2:** The natural order priority number is the same as the INT number.

The ability for the user to assign every interrupt to one of seven priority levels implies that the user can assign a very high overall priority level to an interrupt with a low natural order priority. For example, the PLVD (Low-Voltage Detect) can be given a priority of 7. The INT0 (External Interrupt 0) may be assigned to priority level 1, thus giving it a very low effective priority.

TABLE 5-1: INTERRUPT VECTOR TABLE

INT Number	Vector Number	Interrupt Source
Highest Natural Order Priority		
0	8	INT0 – External Interrupt 0
1	9	IC1 – Input Capture 1
2	10	OC1 – Output Compare 1
3	11	T1 – Timer1
4	12	IC2 – Input Capture 2
5	13	OC2 – Output Compare 2
6	14	T2 – Timer2
7	15	T3 – Timer3
8	16	SPI1
9	17	U1RX – UART1 Receiver
10	18	U1TX – UART1 Transmitter
11	19	ADC – ADC Convert Done
12	20	NVM – NVM Write Complete
13	21	SI2C – I^2C™ Slave Interrupt
14	22	MI2C – I^2C Master Interrupt
15	23	Input Change Interrupt
16	24	INT1 – External Interrupt 1
17	25	IC7 – Input Capture 7
18	26	IC8 – Input Capture 8
19	27	OC3 – Output Compare 3
20	28	OC4 – Output Compare 4
21	29	T4 – Timer4
22	30	T5 – Timer5
23	31	INT2 – External Interrupt 2
24	32	U2RX – UART2 Receiver
25	33	U2TX – UART2 Transmitter
26	34	SPI2
27	35	C1 – Combined IRQ for CAN1
28	36	IC3 – Input Capture 3
29	37	IC4 – Input Capture 4
30	38	IC5 – Input Capture 5
31	39	IC6 – Input Capture 6
32	40	OC5 – Output Compare 5
33	41	OC6 – Output Compare 6
34	42	OC7 – Output Compare 7
35	43	OC8 – Output Compare 8
36	44	INT3 – External Interrupt 3
37	45	INT4 – External Interrupt 4
38	46	C2 – Combined IRQ for CAN2
39-40	47-48	Reserved
41	49	DCI – Codec Transfer Done(1)
42	50	LVD – Low-Voltage Detect
43-53	51-61	Reserved
Lowest Natural Order Priority		

Note 1: Reserved on dsPIC30F6011A and dsPIC30F6013A because the DCI module is not available on these devices.

© 2011 Microchip Technology Inc.

Downloaded from Arrow.com.

5.2 Reset Sequence

A Reset is not a true exception, because the interrupt controller is not involved in the Reset process. The processor initializes its registers in response to a Reset which forces the PC to zero. The processor then begins program execution at location 0x000000. A `GOTO` instruction is stored in the first program memory location immediately followed by the address target for the `GOTO` instruction. The processor executes the `GOTO` to the specified address and then begins operation at the specified target (start) address.

5.2.1 RESET SOURCES

In addition to external Reset and Power-on Reset (POR), there are 6 sources of error conditions which 'trap' to the Reset vector.

- Watchdog Time-out:
  The watchdog has timed out, indicating that the processor is no longer executing the correct flow of code.
- Uninitialized W Register Trap:
  An attempt to use an uninitialized W register as an address pointer will cause a Reset.
- Illegal Instruction Trap:
  Attempted execution of any unused opcodes will result in an illegal instruction trap. Note that a fetch of an illegal instruction does not result in an illegal instruction trap if that instruction is flushed prior to execution due to a flow change.
- Brown-out Reset (BOR):
  A momentary dip in the power supply to the device has been detected which may result in malfunction.
- Trap Lockout:
  Occurrence of multiple trap conditions simultaneously will cause a Reset.
- Software Reset Instruction

5.3 Traps

Traps can be considered as non-maskable interrupts indicating a software or hardware error, which adhere to a predefined priority, as shown in Table 5-1. They are intended to provide the user a means to correct erroneous operation during debug and when operating within the application.

Note:	If the user does not intend to take corrective action in the event of a trap error condition, these vectors must be loaded with the address of a default handler that simply contains the `RESET` instruction. If, on the other hand, one of the vectors containing an invalid address is called, an address error trap is generated.

Note that many of these trap conditions can only be detected when they occur. Consequently, the questionable instruction is allowed to complete prior to trap exception processing. If the user chooses to recover from the error, the result of the erroneous action that caused the trap may have to be corrected.

There are 8 fixed priority levels for traps: level 8 through level 15, which implies that the IPL3 is always set during processing of a trap.

If the user is not currently executing a trap, and he sets the IPL<3:0> bits to a value of '`0111`' (level 7), then all interrupts are disabled but traps can still be processed.

5.3.1 TRAP SOURCES

The following traps are provided with increasing priority. However, since all traps can be nested, priority has little effect.

Math Error Trap:

The math error trap executes under the following four circumstances:

- Should an attempt be made to divide by zero, the divide operation will be aborted on a cycle boundary and the trap taken.
- If enabled, a math error trap will be taken when an arithmetic operation on either accumulator A or B causes an overflow from bit 31 and the accumulator guard bits are not utilized.
- If enabled, a math error trap will be taken when an arithmetic operation on either accumulator A or B causes a catastrophic overflow from bit 39 and all saturation is disabled.
- If the shift amount specified in a shift instruction is greater than the maximum allowed shift amount, a trap will occur.

Address Error Trap:

This trap is initiated when any of the following circumstances occurs:

- A misaligned data word access is attempted
- A data fetch from and unimplemented data memory location is attempted
- A data fetch from an unimplemented program memory location is attempted
- An instruction fetch from vector space is attempted

Note:	In the `MAC` class of instructions, wherein the data space is split into X and Y data space, unimplemented X space includes all of Y space, and unimplemented Y space includes all of X space.

Downloaded from Arrow.com.

- Execution of a "`BRA #literal`" instruction or a "`GOTO #literal`" instruction, where `literal` is an unimplemented program memory address
- Executing instructions after modifying the PC to point to unimplemented program memory addresses. The PC may be modified by loading a value into the stack and executing a `RETURN` instruction

Stack Error Trap:

This trap is initiated under the following conditions:

- The Stack Pointer is loaded with a value which is greater than the (user programmable) limit value written into the SPLIM register (stack overflow)
- The Stack Pointer is loaded with a value which is less than 0x0800 (simple stack underflow)

Oscillator Fail Trap:

This trap is initiated if the external oscillator fails and operation becomes reliant on an internal RC backup.

5.3.2 HARD AND SOFT TRAPS

It is possible that multiple traps can become active within the same cycle (e.g., a misaligned word stack write to an overflowed address). In such a case, the fixed priority shown in Figure 5-1 is implemented, which may require the user to check if other traps are pending in order to completely correct the fault.

'Soft' traps include exceptions of priority level 8 through level 11, inclusive. The arithmetic error trap (level 11) falls into this category of traps.

'Hard' traps include exceptions of priority level 12 through level 15, inclusive. The address error (level 12), stack error (level 13) and oscillator error (level 14) traps fall into this category.

Each hard trap that occurs must be acknowledged before code execution of any type may continue. If a lower priority hard trap occurs while a higher priority trap is pending, acknowledged, or is being processed, a hard trap conflict will occur.

The device is automatically reset in a hard trap conflict condition. The TRAPR status bit (RCON<15>) is set when the Reset occurs so that the condition may be detected in software.

FIGURE 5-1: TRAP VECTORS

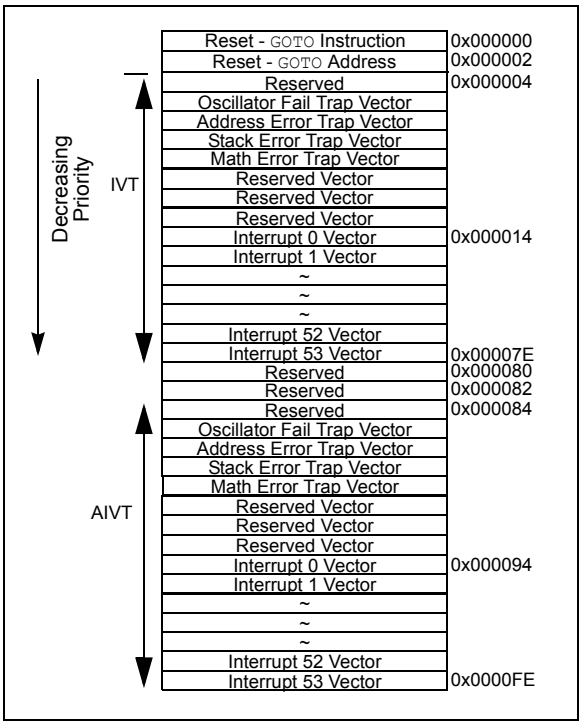

5.4 Interrupt Sequence

All interrupt event flags are sampled in the beginning of each instruction cycle by the IFSx registers. A pending Interrupt Request (IRQ) is indicated by the flag bit being equal to a '`1`' in an IFSx register. The IRQ will cause an interrupt to occur if the corresponding bit in the Interrupt Enable (IECx) register is set. For the remainder of the instruction cycle, the priorities of all pending interrupt requests are evaluated.

If there is a pending IRQ with a priority level greater than the current processor priority level in the IPL bits, the processor will be interrupted.

The processor then stacks the current Program Counter and the low byte of the processor STATUS register (SRL), as shown in Figure 5-2. The low byte of the STATUS register contains the processor priority level at the time prior to the beginning of the interrupt cycle. The processor then loads the priority level for this interrupt into the STATUS register. This action will disable all lower priority interrupts until the completion of the Interrupt Service Routine.

© 2011 Microchip Technology Inc.

Downloaded from Arrow.com.

FIGURE 5-2: INTERRUPT STACK FRAME

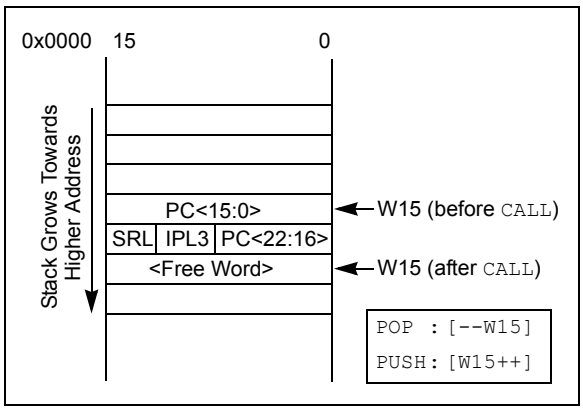

Note 1: The user can always lower the priority level by writing a new value into SR. The Interrupt Service Routine must clear the interrupt flag bits in the IFSx register before lowering the processor interrupt priority, in order to avoid recursive interrupts.

2: The IPL3 bit (CORCON<3>) is always clear when interrupts are being processed. It is set only during execution of traps.

The `RETFIE` (return from interrupt) instruction will unstack the Program Counter and STATUS registers to return the processor to its state prior to the interrupt sequence.

5.5 Alternate Vector Table

In program memory, the Interrupt Vector Table (IVT) is followed by the Alternate Interrupt Vector Table (AIVT), as shown in Table 5-1. Access to the alternate vector table is provided by the ALTIVT bit in the INTCON2 register. If the ALTIVT bit is set, all interrupt and exception processes will use the alternate vectors instead of the default vectors. The alternate vectors are organized in the same manner as the default vectors. The AIVT supports emulation and debugging efforts by providing a means to switch between an application and a support environment without requiring the interrupt vectors to be reprogrammed. This feature also enables switching between applications for evaluation of different software algorithms at run time.

If the AIVT is not required, the program memory allocated to the AIVT may be used for other purposes. AIVT is not a protected section and may be freely programmed by the user.

5.6 Fast Context Saving

A context saving option is available using shadow registers. Shadow registers are provided for the DC, N, OV, Z and C bits in SR, and the registers W0 through W3. The shadows are only one level deep. The shadow registers are accessible using the `PUSH.S` and `POP.S` instructions only.

When the processor vectors to an interrupt, the `PUSH.S` instruction can be used to store the current value of the aforementioned registers into their respective shadow registers.

If an ISR of a certain priority uses the `PUSH.S` and `POP.S` instructions for fast context saving, then a higher priority ISR should not include the same instructions. Users must save the key registers in software during a lower priority interrupt if the higher priority ISR uses fast context saving.

5.7 External Interrupt Requests

The interrupt controller supports up to five external interrupt request signals, INT0-INT4. These inputs are edge sensitive; they require a low-to-high or a high-to-low transition to generate an interrupt request. The INTCON2 register has five bits, INT0EP-INT4EP, that select the polarity of the edge detection circuitry.

5.8 Wake-up from Sleep and Idle

The interrupt controller may be used to wake-up the processor from either Sleep or Idle modes, if Sleep or Idle mode is active when the interrupt is generated.

If an enabled interrupt request of sufficient priority is received by the interrupt controller, then the standard interrupt request is presented to the processor. At the same time, the processor will wake-up from Sleep or Idle and begin execution of the Interrupt Service Routine (ISR) needed to process the interrupt request.

Downloaded from Arrow.com.

TABLE 5-2: INTERRUPT CONTROLLER REGISTER MAP(1)

SFR Name	ADR	Bit 15	Bit 14	Bit 13	Bit 12	Bit 11	Bit 10	Bit 9	Bit 8	Bit 7	Bit 6	Bit 5	Bit 4	Bit 3	Bit 2	Bit 1	Bit 0	Reset State
INTCON1	0080	NSTDIS	—	—	—	—	OVATE	OVBTE	COVTE	—	—	—	MATHERR	ADDRERR	STKERR	OSCFAIL	—	0000 0000 0000 0000
INTCON2	0082	ALTIVT	DISI	—	—	—	—	—	—	—	—	—	INT4EP	INT3EP	INT2EP	INT1EP	INT0EP	0000 0000 0000 0000
IFS0	0084	CNIF	MI2CIF	SI2CIF	NVMIF	ADIF	U1TXIF	U1RXIF	SPI1IF	T3IF	T2IF	OC2IF	IC2IF	T1IF	OC1IF	IC1IF	INT0IF	0000 0000 0000 0000
IFS1	0086	IC6IF	IC5IF	IC4IF	IC3IF	C1IF	SPI2IF	U2TXIF	U2RXIF	INT2IF	T5IF	T4IF	OC4IF	OC3IF	IC8IF	IC7IF	INT1IF	0000 0000 0000 0000
IFS2	0088	—	—	—	—	—	LVDIF	DCIIF2	—	—	C2IF	INT4IF	INT3IF	OC8IF	OC7IF	OC6IF	OC5IF	0000 0000 0000 0000
IEC0	008C	CNIE	MI2CIE	SI2CIE	NVMIE	ADIE	U1TXIE	U1RXIE	SPI1IE	T3IE	T2IE	OC2IE	IC2IE	T1IE	OC1IE	IC1IE	INT0IE	0000 0000 0000 0000
IEC1	008E	IC6IE	IC5IE	IC4IE	IC3IE	C1IE	SPI2IE	U2TXIE	U2RXIE	INT2IE	T5IE	T4IE	OC4IE	OC3IE	IC8IE	IC7IE	INT1IE	0000 0000 0000 0000
IEC2	0090	—	—	—	—	—	LVDIE	DCIIE2	—	—	C2IE	INT4IE	INT3IE	OC8IE	OC7IE	OC6IE	OC5IE	0000 0000 0000 0000
IPC0	0094	—	T1IP<2:0>			—	OC1IP<2:0>			—	IC1IP<2:0>			—	INT0IP<2:0>			0100 0100 0100 0100
IPC1	0096	—	T31P<2:0>			—	T2IP<2:0>			—	OC2IP<2:0>			—	IC2IP<2:0>			0100 0100 0100 0100
IPC2	0098	—	ADIP<2:0>			—	U1TXIP<2:0>			—	U1RXIP<2:0>			—	SPI1IP<2:0>			0100 0100 0100 0100
IPC3	009A	—	CNIP<2:0>			—	MI2CIP<2:0>			—	SI2CIP<2:0>			—	NVMIP<2:0>			0100 0100 0100 0100
IPC4	009C	—	OC3IP<2:0>			—	IC8IP<2:0>			—	IC7IP<2:0>			—	INT1IP<2:0>			0100 0100 0100 0100
IPC5	009E	—	INT2IP<2:0>			—	T5IP<2:0>			—	T4IP<2:0>			—	OC4IP<2:0>			0100 0100 0100 0100
IPC6	00A0	—	C1IP<2:0>			—	SPI2IP<2:0>			—	U2TXIP<2:0>			—	U2RXIP<2:0>			0100 0100 0100 0100
IPC7	00A2	—	IC6IP<2:0>			—	IC5IP<2:0>			—	IC4IP<2:0>			—	IC3IP<2:0>			0100 0100 0100 0100
IPC8	00A4	—	OC8IP<2:0>			—	OC7IP<2:0>			—	OC6IP<2:0>			—	OC5IP<2:0>			0100 0100 0100 0100
IPC9	00A6	—	—	—	—	—	C2IP<2:0>			—	INT41IP<2:0>			—	INT3IP<2:0>			0000 0100 0100 0100
IPC10	00A8	—	—	—	—	—	LVDIP<2:0>			—	DCIIP<2:0>(2)			—	—	—	—	0000 0100 0100 0000
INTTREG	00B0	—	—	—	—	—	ILR<3:0>			—	—	VECNUM<5:0>						0000 0000 0000 0000

Legend: u = uninitialized bit; — = unimplemented bit, read as '0'

Note 1: Refer to the *"dsPIC30F Family Reference Manual"* (DS70046) for descriptions of register bit fields.

2: These bits are not available in the dsPIC30F6011A and dsPIC30F6013A devices.

© 2011 Microchip Technology Inc.

Downloaded from Arrow.com.

6.0 FLASH PROGRAM MEMORY

Note: This data sheet summarizes features of this group of dsPIC30F devices and is not intended to be a complete reference source. For more information on the CPU, peripherals, register descriptions and general device functionality, refer to the "*dsPIC30F Family Reference Manual*" (DS70046). For more information on the device instruction set and programming, refer to the *"16-bit MCU and DSC Programmer's Reference Manual"* (DS70157).

The dsPIC30F family of devices contains internal program Flash memory for executing user code. There are two methods by which the user can program this memory:

- Run-Time Self-Programming (RTSP)
- In-Circuit Serial Programming™ (ICSP™)

6.1 In-Circuit Serial Programming (ICSP)

dsPIC30F devices can be serially programmed while in the end application circuit. This is simply done with two lines for Programming Clock and Programming Data (which are named PGC and PGD respectively), and three other lines for Power (VDD), Ground (VSS) and Master Clear (MCLR). this allows customers to manufacture boards with unprogrammed devices, and then program the microcontroller just before shipping the product. This also allows the most recent firmware or a custom firmware to be programmed.

6.2 Run-Time Self-Programming (RTSP)

RTSP is accomplished using `TBLRD` (table read) and `TBLWT` (table write) instructions.

With RTSP, the user may erase program memory, 32 instructions (96 bytes) at a time and can write program memory data, 32 instructions (96 bytes) at a time.

6.3 Table Instruction Operation Summary

The `TBLRDL` and the `TBLWTL` instructions are used to read or write to bits<15:0> of program memory. `TBLRDL` and `TBLWTL` can access program memory in Word or Byte mode.

The `TBLRDH` and `TBLWTH` instructions are used to read or write to bits<23:16> of program memory. `TBLRDH` and `TBLWTH` can access program memory in Word or Byte mode.

A 24-bit program memory address is formed using bits<7:0> of the TBLPAG register and the Effective Address (EA) from a W register specified in the table instruction, as shown in Figure 6-1.

FIGURE 6-1: ADDRESSING FOR TABLE AND NVM REGISTERS

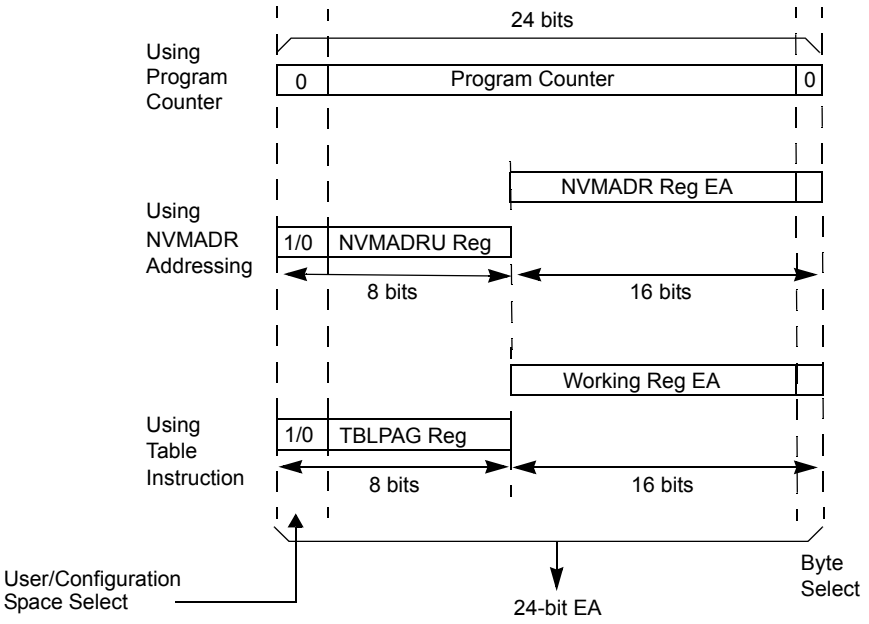

Downloaded from Arrow.com.

6.4 RTSP Operation

The dsPIC30F Flash program memory is organized into rows and panels. Each row consists of 32 instructions or 96 bytes. Each panel consists of 128 rows or 4K x 24 instructions. RTSP allows the user to erase one row (32 instructions) at a time and to program four instructions at one time. RTSP may be used to program multiple program memory panels, but the table pointer must be changed at each panel boundary.

Each panel of program memory contains write latches that hold 32 instructions of programming data. Prior to the actual programming operation, the write data must be loaded into the panel write latches. The data to be programmed into the panel is loaded in sequential order into the write latches: instruction 0, instruction 1, etc. The instruction words loaded must always be from a group of 32 boundary.

The basic sequence for RTSP programming is to set up a table pointer, then do a series of `TBLWT` instructions to load the write latches. Programming is performed by setting the special bits in the NVMCON register. Four `TBLWTL` and four `TBLWTH` instructions are required to load the four instructions. If multiple panel programming is required, the table pointer needs to be changed and the next set of multiple write latches written.

All of the table write operations are single word writes (2 instruction cycles) because only the table latches are written. A programming cycle is required for programming each row.

The Flash program memory is readable, writable, and erasable during normal operation over the entire VDD range.

6.5 Control Registers

The four SFRs used to read and write the program Flash memory are:

- NVMCON
- NVMADR
- NVMADRU
- NVMKEY

6.5.1 NVMCON REGISTER

The NVMCON register controls which blocks are to be erased, which memory type is to be programmed and start of the programming cycle.

6.5.2 NVMADR REGISTER

The NVMADR register is used to hold the lower two bytes of the Effective Address. The NVMADR register captures the EA<15:0> of the last table instruction that has been executed and selects the row to write.

6.5.3 NVMADRU REGISTER

The NVMADRU register is used to hold the upper byte of the Effective Address. The NVMADRU register captures the EA<23:16> of the last table instruction that has been executed.

6.5.4 NVMKEY REGISTER

NVMKEY is a write only register that is used for write protection. To start a programming or an erase sequence, the user must consecutively write 0x55 and 0xAA to the NVMKEY register. Refer to **Section 6.6 "Programming Operations"** for further details.

Note:	The user can also directly write to the NVMADR and NVMADRU registers to specify a program memory address for erasing or programming.

© 2011 Microchip Technology Inc.

Downloaded from Arrow.com.

6.6 Programming Operations

A complete programming sequence is necessary for programming or erasing the internal Flash in RTSP mode. A programming operation is nominally 2 msec in duration and the processor stalls (waits) until the operation is finished. Setting the WR bit (NVMCON<15>) starts the operation, and the WR bit is automatically cleared when the operation is finished.

6.6.1 PROGRAMMING ALGORITHM FOR PROGRAM FLASH

The user can erase and program one row of program Flash memory at a time. The general process is:

1. Read one row of program Flash (32 instruction words) and store into data RAM as a data "image".
2. Update the data image with the desired new data.
3. Erase program Flash row.
   a) Set up NVMCON register for multi-word, program Flash, erase, and set WREN bit.
   b) Write address of row to be erased into NVMADRU/NVMADR.
   c) Write 0x55 to NVMKEY.
   d) Write 0xAA to NVMKEY.
   e) Set the WR bit. This will begin erase cycle.
   f) CPU will stall for the duration of the erase cycle.
   g) The WR bit is cleared when erase cycle ends.
4. Write 32 instruction words of data from data RAM "image" into the program Flash write latches.
5. Program 32 instruction words into program Flash.
   a) Set up NVMCON register for multi-word, program Flash, program, and set WREN bit.
   b) Write 0x55 to NVMKEY.
   c) Write 0xAA to NVMKEY.
   d) Set the WR bit. This will begin program cycle.
   e) CPU will stall for duration of the program cycle.
   f) The WR bit is cleared by the hardware when program cycle ends.
6. Repeat steps 1 through 5 as needed to program desired amount of program Flash memory.

6.6.2 ERASING A ROW OF PROGRAM MEMORY

Example 6-1 shows a code sequence that can be used to erase a row (32 instructions) of program memory.

EXAMPLE 6-1: ERASING A ROW OF PROGRAM MEMORY

```
; Setup NVMCON for erase operation, multi word write
; program memory selected, and writes enabled
        MOV     #0x4041,W0                  ;
        MOV     W0,NVMCON                   ; Init NVMCON SFR
; Init pointer to row to be ERASED
        MOV     #tblpage(PROG_ADDR),W0      ;
        MOV     W0,NVMADRU                  ; Initialize PM Page Boundary SFR
        MOV     #tbloffset(PROG_ADDR),W0    ; Intialize in-page EA[15:0] pointer
        MOV     W0, NVMADR                  ; Initialize NVMADR SFR
        DISI    #5                          ; Block all interrupts with priority <7 for
                                            ; next 5 instructions
        MOV     #0x55,W0
        MOV     W0,NVMKEY                   ; Write the 0x55 key
        MOV     #0xAA,W1                    ;
        MOV     W1,NVMKEY                   ; Write the 0xAA key
        BSET    NVMCON,#WR                  ; Start the erase sequence
        NOP                                 ; Insert two NOPs after the erase
        NOP                                 ; command is asserted
```


Downloaded from Arrow.com.

6.6.3 LOADING WRITE LATCHES

Example 6-2 shows a sequence of instructions that can be used to load the 96 bytes of write latches. 32 TBLWTL and 32 TBLWTH instructions are needed to load the write latches selected by the table pointer.

EXAMPLE 6-2: LOADING WRITE LATCHES

```
; Set up a pointer to the first program memory location to be written
; program memory selected, and writes enabled
        MOV     #0x0000,W0                  ;
        MOV     W0,TBLPAG                   ; Initialize PM Page Boundary SFR
        MOV     #0x6000,W0                  ; An example program memory address
; Perform the TBLWT instructions to write the latches
; 0th_program_word
        MOV     #LOW_WORD_0,W2              ;
        MOV     #HIGH_BYTE_0,W3             ;
        TBLWTL  W2,[W0]                     ; Write PM low word into program latch
        TBLWTH  W3,[W0++]                   ; Write PM high byte into program latch
; 1st_program_word
        MOV     #LOW_WORD_1,W2              ;
        MOV     #HIGH_BYTE_1,W3             ;
        TBLWTL  W2,[W0]                     ; Write PM low word into program latch
        TBLWTH  W3,[W0++]                   ; Write PM high byte into program latch
;  2nd_program_word
        MOV     #LOW_WORD_2,W2              ;
        MOV     #HIGH_BYTE_2,W3             ;
        TBLWTL  W2, [W0]                    ; Write PM low word into program latch
        TBLWTH  W3, [W0++]                  ; Write PM high byte into program latch
        •
        •
        •
; 31st_program_word
        MOV     #LOW_WORD_31,W2             ;
        MOV     #HIGH_BYTE_31,W3            ;
        TBLWTL  W2, [W0]                    ; Write PM low word into program latch
        TBLWTH  W3, [W0++]                  ; Write PM high byte into program latch
```

Note: In Example 6-2, the contents of the upper byte of W3 has no effect.

6.6.4 INITIATING THE PROGRAMMING SEQUENCE

For protection, the write initiate sequence for NVMKEY must be used to allow any erase or program operation to proceed. After the programming command has been executed, the user must wait for the programming time until programming is complete. The two instructions following the start of the programming sequence should be NOPs.

EXAMPLE 6-3: INITIATING A PROGRAMMING SEQUENCE

```
        DISI    #5                      ; Block all interrupts with priority <7 for
                                        ; next 5 instructions
        MOV     #0x55,W0                ;
        MOV     W0,NVMKEY               ; Write the 0x55 key
        MOV     #0xAA,W1                ;
        MOV     W1,NVMKEY               ; Write the 0xAA key
        BSET    NVMCON,#WR              ; Start the erase sequence
        NOP                             ; Insert two NOPs after the erase
        NOP                             ; command is asserted
```


© 2011 Microchip Technology Inc.

Downloaded from Arrow.com.

TABLE 6-1: NVM REGISTER MAP(1)

File Name	Addr.	Bit 15	Bit 14	Bit 13	Bit 12	Bit 11	Bit 10	Bit 9	Bit 8	Bit 7	Bit 6	Bit 5	Bit 4	Bit 3	Bit 2	Bit 1	Bit 0	All RESETS
NVMCON	0760	WR	WREN	WRERR	—	—	—	—	TWRI	—	PROGOP<6:0>							0000 0000 0000 0000
NVMADR	0762	NVMADR<15:0>																uuuu uuuu uuuu uuuu
NVMADRU	0764	—	—	—	—	—	—	—	—	NVMADR<23:16>								0000 0000 uuuu uuuu
NVMKEY	0766	—	—	—	—	—	—	—	—	KEY<7:0>								0000 0000 0000 0000

Legend: u = uninitialized bit; — = unimplemented bit, read as '0'

Note 1: Refer to the *"dsPIC30F Family Reference Manual"* (DS70046) for descriptions of register bit fields.

Downloaded from Arrow.com.

NOTES:

© 2011 Microchip Technology Inc.

Downloaded from Arrow.com.

7.0 DATA EEPROM MEMORY

Note: This data sheet summarizes features of this group of dsPIC30F devices and is not intended to be a complete reference source. For more information on the CPU, peripherals, register descriptions and general device functionality, refer to the "*dsPIC30F Family Reference Manual*" (DS70046). For more information on the device instruction set and programming, refer to the *"16-bit MCU and DSC Programmer's Reference Manual"* (DS70157).

The Data EEPROM Memory is readable and writable during normal operation over the entire VDD range. The data EEPROM memory is directly mapped in the program memory address space.

The four SFRs used to read and write the program Flash memory are used to access data EEPROM memory, as well. As described in **Section 6.5 "Control Registers"**, these registers are:

- NVMCON
- NVMADR
- NVMADRU
- NVMKEY

The EEPROM data memory allows read and write of single words and 16-word blocks. When interfacing to data memory, NVMADR in conjunction with the NVMADRU register are used to address the EEPROM location being accessed. `TBLRDL` and `TBLWTL` instructions are used to read and write data EEPROM. The dsPIC30F devices have up to 8 Kbytes (4K words) of data EEPROM with an address range from 0x7FF000 to 0x7FFFFE.

A word write operation should be preceded by an erase of the corresponding memory location(s). The write typically requires 2 ms to complete but the write time will vary with voltage and temperature.

A program or erase operation on the data EEPROM does not stop the instruction flow. The user is responsible for waiting for the appropriate duration of time before initiating another data EEPROM write/erase operation. Attempting to read the data EEPROM while a programming or erase operation is in progress results in unspecified data.

Control bit WR initiates write operations similar to program Flash writes. This bit cannot be cleared, only set, in software. They are cleared in hardware at the completion of the write operation. The inability to clear the WR bit in software prevents the accidental or premature termination of a write operation.

The WREN bit, when set, will allow a write operation. On power-up, the WREN bit is clear. The WRERR bit is set when a write operation is interrupted by a $\overline{\text{MCLR}}$ Reset or a WDT Time-out Reset during normal operation. In these situations, following Reset, the user can check the WRERR bit and rewrite the location. The address register NVMADR remains unchanged.

Note: Interrupt flag bit NVMIF in the IFS0 register is set when write is complete. It must be cleared in software.

7.1 Reading the Data EEPROM

A `TBLRD` instruction reads a word at the current program word address. This example uses W0 as a pointer to data EEPROM. The result is placed in register W4 as shown in Example 7-1.

EXAMPLE 7-1: DATA EEPROM READ

```
MOV     #LOW_ADDR_WORD,W0   ; Init Pointer
MOV     #HIGH_ADDR_WORD,W1
MOV     W1,TBLPAG
TBLRDL  [ W0 ], W4          ; read data EEPROM
```


Downloaded from Arrow.com.

7.2 Erasing Data EEPROM

7.2.1 ERASING A BLOCK OF DATA EEPROM

In order to erase a block of data EEPROM, the NVMADRU and NVMADR registers must initially point to the block of memory to be erased. Configure NVMCON for erasing a block of data EEPROM, and set the ERASE and WREN bits in the NVMCON register. Setting the WR bit initiates the erase as shown in Example 7-2.

EXAMPLE 7-2: DATA EEPROM BLOCK ERASE

```
; Select data EEPROM block, ERASE, WREN bits
    MOV     #0x4045,W0
    MOV     W0,NVMCON                   ; Initialize NVMCON SFR

; Start erase cycle by setting WR after writing key sequence
    DISI    #5                          ; Block all interrupts with priority <7 for
                                        ; next 5 instructions
    MOV     #0x55,W0                    ;
    MOV     W0,NVMKEY                   ; Write the 0x55 key
    MOV     #0xAA,W1                    ;
    MOV     W1,NVMKEY                   ; Write the 0xAA key
    BSET    NVMCON,#WR                  ; Initiate erase sequence
    NOP
    NOP
; Erase cycle will complete in 2mS. CPU is not stalled for the Data Erase Cycle
; User can poll WR bit, use NVMIF or Timer IRQ to determine erasure complete
```

7.2.2 ERASING A WORD OF DATA EEPROM

The TBLPAG and NVMADR registers must point to the block. Select erase a block of data Flash, and set the ERASE and WREN bits in the NVMCON register. Setting the WR bit initiates the erase as shown in Example 7-3.

EXAMPLE 7-3: DATA EEPROM WORD ERASE

```
; Select data EEPROM word, ERASE, WREN bits
    MOV     #0x4044,W0
    MOV     W0,NVMCON

; Start erase cycle by setting WR after writing key sequence
    DISI    #5                          ; Block all interrupts with priority <7 for
                                        ; next 5 instructions
    MOV     #0x55,W0                    ;
    MOV     W0,NVMKEY                   ; Write the 0x55 key
    MOV     #0xAA,W1                    ;
    MOV     W1,NVMKEY                   ; Write the 0xAA key
    BSET    NVMCON,#WR                  ; Initiate erase sequence
    NOP
    NOP
; Erase cycle will complete in 2mS. CPU is not stalled for the Data Erase Cycle
; User can poll WR bit, use NVMIF or Timer IRQ to determine erasure complete
```


© 2011 Microchip Technology Inc.

Downloaded from Arrow.com.

7.3 Writing to the Data EEPROM

To write an EEPROM data location, the following sequence must be followed:

1. Erase data EEPROM word.
   a) Select word, data EEPROM erase and set WREN bit in NVMCON register.
   b) Write address of word to be erased into NVMADR.
   c) Enable NVM interrupt (optional).
   d) Write 0x55 to NVMKEY.
   e) Write 0xAA to NVMKEY.
   f) Set the WR bit. This will begin erase cycle.
   g) Either poll NVMIF bit or wait for NVMIF interrupt.
   h) The WR bit is cleared when the erase cycle ends.
2. Write data word into data EEPROM write latches.
3. Program 1 data word into data EEPROM.
   a) Select word, data EEPROM program and set WREN bit in NVMCON register.
   b) Enable NVM write done interrupt (optional).
   c) Write 0x55 to NVMKEY.
   d) Write 0xAA to NVMKEY.
   e) Set the WR bit. This will begin program cycle.
   f) Either poll NVMIF bit or wait for NVM interrupt.
   g) The WR bit is cleared when the write cycle ends.

The write will not initiate if the above sequence is not exactly followed (write 0x55 to NVMKEY, write 0xAA to NVMCON, then set WR bit) for each word. It is strongly recommended that interrupts be disabled during this code segment.

Additionally, the WREN bit in NVMCON must be set to enable writes. This mechanism prevents accidental writes to data EEPROM due to unexpected code execution. The WREN bit should be kept clear at all times except when updating the EEPROM. The WREN bit is not cleared by hardware.

After a write sequence has been initiated, clearing the WREN bit will not affect the current write cycle. The WR bit will be inhibited from being set unless the WREN bit is set. The WREN bit must be set on a previous instruction. Both WR and WREN cannot be set with the same instruction.

At the completion of the write cycle, the WR bit is cleared in hardware and the Non-Volatile Memory Write Complete Interrupt Flag bit (NVMIF) is set. The user may either enable this interrupt or poll this bit. NVMIF must be cleared by software.

7.3.1 WRITING A WORD OF DATA EEPROM

Once the user has erased the word to be programmed, then a table write instruction is used to write one write latch, as shown in Example 7-4.

EXAMPLE 7-4: DATA EEPROM WORD WRITE

```
; Point to data memory
    MOV         #LOW_ADDR_WORD,W0                 ; Init pointer
    MOV         #HIGH_ADDR_WORD,W1
    MOV         W1,TBLPAG
    MOV         #LOW(WORD),W2                     ; Get data
    TBLWTL      W2,[ W0]                          ; Write data
; The NVMADR captures last table access address
; Select data EEPROM for 1 word op
    MOV         #0x4004,W0
    MOV         W0,NVMCON

; Operate key to allow write operation
    DISI        #5                                ; Block all interrupts with priority <7 for
                                                  ; next 5 instructions
    MOV         #0x55,W0
    MOV         W0,NVMKEY                         ; Write the 0x55 key
    MOV         #0xAA,W1
    MOV         W1,NVMKEY                         ; Write the 0xAA key
    BSET        NVMCON,#WR                        ; Initiate program sequence
    NOP
    NOP
; Write cycle will complete in 2 ms. CPU is not stalled for the Data Write Cycle
; User can poll WR bit, use NVMIF or Timer IRQ to determine write complete
```


Downloaded from Arrow.com.

7.3.2 WRITING A BLOCK OF DATA EEPROM

To write a block of data EEPROM, write to all sixteen latches first, then set the NVMCON register and program the block.

EXAMPLE 7-5: DATA EEPROM BLOCK WRITE

```
MOV         #LOW_ADDR_WORD,W0  ; Init pointer
MOV         #HIGH_ADDR_WORD,W1
MOV         W1,TBLPAG
MOV         #data1,W2          ; Get 1st data
TBLWTL      W2,[ W0]++         ; write data
MOV         #data2,W2          ; Get 2nd data
TBLWTL      W2,[ W0]++         ; write data
MOV         #data3,W2          ; Get 3rd data
TBLWTL      W2,[ W0]++         ; write data
MOV         #data4,W2          ; Get 4th data
TBLWTL      W2,[ W0]++         ; write data
MOV         #data5,W2          ; Get 5th data
TBLWTL      W2,[ W0]++         ; write data
MOV         #data6,W2          ; Get 6th data
TBLWTL      W2,[ W0]++         ; write data
MOV         #data7,W2          ; Get 7th data
TBLWTL      W2,[ W0]++         ; write data
MOV         #data8,W2          ; Get 8th data
TBLWTL      W2,[ W0]++         ; write data
MOV         #data9,W2          ; Get 9th data
TBLWTL      W2,[ W0]++         ; write data
MOV         #data10,W2         ; Get 10th data
TBLWTL      W2,[ W0]++         ; write data
MOV         #data11,W2         ; Get 11th data
TBLWTL      W2,[ W0]++         ; write data
MOV         #data12,W2         ; Get 12th data
TBLWTL      W2,[ W0]++         ; write data
MOV         #data13,W2         ; Get 13th data
TBLWTL      W2,[ W0]++         ; write data
MOV         #data14,W2         ; Get 14th data
TBLWTL      W2,[ W0]++         ; write data
MOV         #data15,W2         ; Get 15th data
TBLWTL      W2,[ W0]++         ; write data
MOV         #data16,W2         ; Get 16th data
TBLWTL      W2,[ W0]++         ; write data. The NVMADR captures last table access address.
MOV         #0x400A,W0         ; Select data EEPROM for multi word op
MOV         W0,NVMCON          ; Operate Key to allow program operation
DISI        #5                 ; Block all interrupts with priority <7 for
                               ; next 5 instructions
MOV         #0x55,W0
MOV         W0,NVMKEY          ; Write the 0x55 key
MOV         #0xAA,W1
MOV         W1,NVMKEY          ; Write the 0xAA key
BSET        NVMCON,#WR         ; Start write cycle
NOP
NOP
```

7.4 Write Verify

Depending on the application, good programming practice may dictate that the value written to the memory should be verified against the original value. This should be used in applications where excessive writes can stress bits near the specification limit.

7.5 Protection Against Spurious Write

There are conditions when the device may not want to write to the data EEPROM memory. To protect against spurious EEPROM writes, various mechanisms have been built-in. On power-up, the WREN bit is cleared; also, the Power-up Timer prevents EEPROM write.

The write initiate sequence and the WREN bit together help prevent an accidental write during brown-out, power glitch, or software malfunction.

© 2011 Microchip Technology Inc.

Downloaded from Arrow.com.

8.0 I/O PORTS

Note: This data sheet summarizes features of this group of dsPIC30F devices and is not intended to be a complete reference source. For more information on the CPU, peripherals, register descriptions and general device functionality, refer to the "*dsPIC30F Family Reference Manual*" (DS70046).

All of the device pins (except VDD, VSS, $\overline{\text{MCLR}}$ and OSC1/CLKI) are shared between the peripherals and the parallel I/O ports.

All I/O input ports feature Schmitt Trigger inputs for improved noise immunity.

8.1 Parallel I/O (PIO) Ports

When a peripheral is enabled and the peripheral is actively driving an associated pin, the use of the pin as a general purpose output pin is disabled. The I/O pin may be read but the output driver for the parallel port bit will be disabled. If a peripheral is enabled but the peripheral is not actively driving a pin, that pin may be driven by a port.

All port pins have three registers directly associated with the operation of the port pin. The Data Direction register (TRISx) determines whether the pin is an input or an output. If the data direction bit is a '1', then the pin is an input. All port pins are defined as inputs after a Reset. Reads from the latch (LATx), read the latch. Writes to the latch, write the latch (LATx). Reads from the port (PORTx), read the port pins and writes to the port pins, write the latch (LATx).

Any bit and its associated data and control registers that are not valid for a particular device will be disabled. That means the corresponding LATx and TRISx registers and the port pin will read as zeros.

When a pin is shared with another peripheral or function that is defined as an input only, it is nevertheless regarded as a dedicated port because there is no other competing source of outputs. An example is the INT4 pin.

The format of the registers for PORTA are shown in Table 8-1.

The TRISA (Data Direction Control) register controls the direction of the RA<7:0> pins, as well as the INTx pins and the VREF pins. The LATA register supplies data to the outputs and is readable/writable. Reading the PORTA register yields the state of the input pins, while writing the PORTA register modifies the contents of the LATA register.

A parallel I/O (PIO) port that shares a pin with a peripheral is, in general, subservient to the peripheral. The peripheral's output buffer data and control signals are provided to a pair of multiplexers. The multiplexers select whether the peripheral or the associated port has ownership of the output data and control signals of the I/O pad cell. Figure 8-2 shows how ports are shared with other peripherals and the associated I/O cell (pad) to which they are connected. Table 8-2 through Table 8-9 show the formats of the registers for the shared ports, PORTB through PORTG.

Note: The actual bits in use vary between devices.

FIGURE 8-1: BLOCK DIAGRAM OF A DEDICATED PORT STRUCTURE

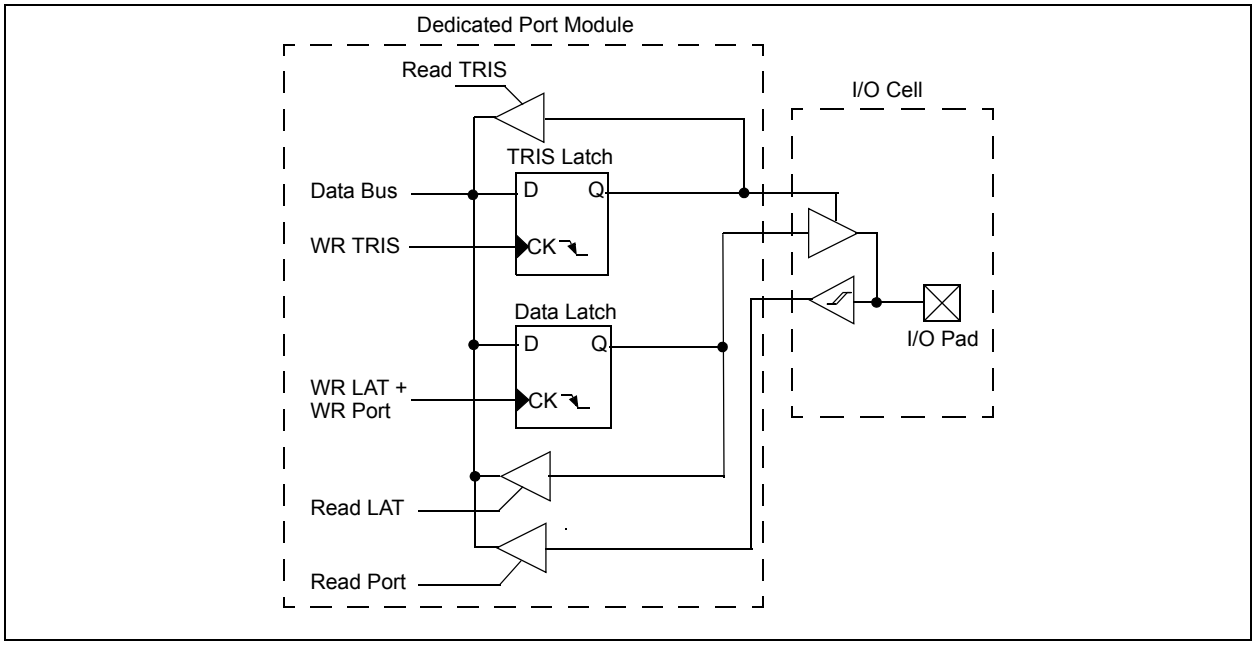

Downloaded from Arrow.com.

8.2 Configuring Analog Port Pins

The use of the ADPCFG and TRIS registers control the operation of the ADC port pins. The port pins that are desired as analog inputs must have their corresponding TRIS bit set (input). If the TRIS bit is cleared (output), the digital output level (V_{OH} or V_{OL}) will be converted.

When reading the Port register, all pins configured as analog input channels will read as cleared (a low level).

Pins configured as digital inputs will not convert an analog input. Analog levels on any pin that is defined as a digital input (including the ANx pins) may cause the input buffer to consume current that exceeds the device specifications.

FIGURE 8-2: BLOCK DIAGRAM OF A SHARED PORT STRUCTURE

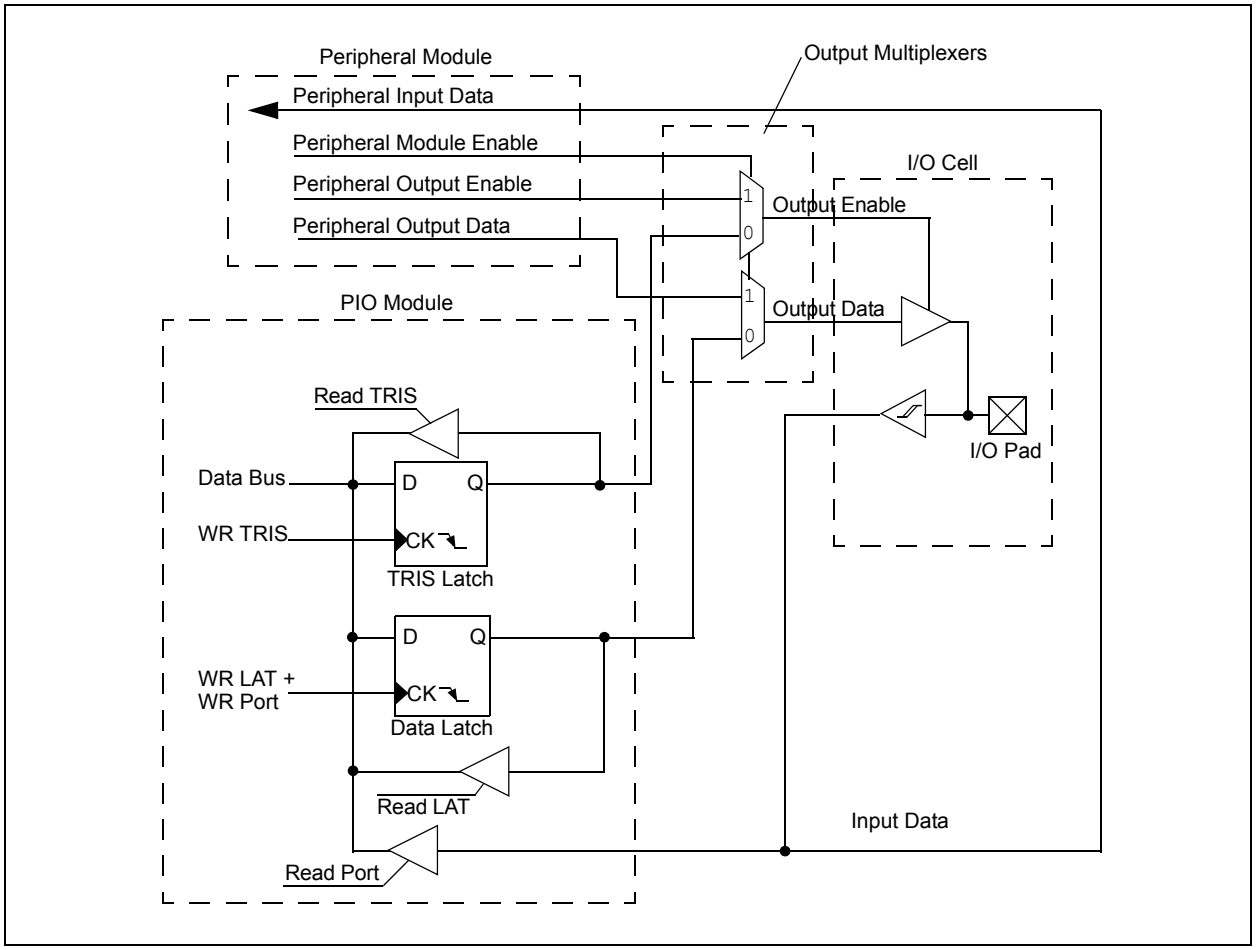

© 2011 Microchip Technology Inc.

Downloaded from Arrow.com.

TABLE 8-1: PORTA REGISTER MAP FOR dsPIC30F6013A/6014A(1)

SFR Name	Addr.	Bit 15	Bit 14	Bit 13	Bit 12	Bit 11	Bit 10	Bit 9	Bit 8	Bit 7	Bit 6	Bit 5	Bit 4	Bit 3	Bit 2	Bit 1	Bit 0	Reset State
TRISA	02C0	TRISA15	TRISA14	TRISA13	TRISA12	—	TRISA10	TRISA9	—	TRISA7	TRISA6	—	—	—	—	—	—	1111 0110 1100 0000
PORTA(2)	02C2	RA15	RA14	RA13	RA12	—	RA10	RA9	—	RA7	RA6	—	—	—	—	—	—	0000 0000 0000 0000
LATA	02C4	LATA15	LATA14	LATA13	LATA12	—	LATA10	LATA9	—	LATA7	LATA6	—	—	—	—	—	—	0000 0000 0000 0000

Legend: — = unimplemented bit, read as '0'
Note 1: Refer to the *"dsPIC30F Family Reference Manual"* (DS70046) for descriptions of register bit fields.
2: PORTA is not implemented in the dsPIC30F6011A/6012A devices.

TABLE 8-2: PORTB REGISTER MAP FOR dsPIC30F6011A/6012A/6013A/6014A(1)

SFR Name	Addr.	Bit 15	Bit 14	Bit 13	Bit 12	Bit 11	Bit 10	Bit 9	Bit 8	Bit 7	Bit 6	Bit 5	Bit 4	Bit 3	Bit 2	Bit 1	Bit 0	Reset State
TRISB	02C6	TRISB15	TRISB14	TRISB13	TRISB12	TRISB11	TRISB10	TRISB9	TRISB8	TRISB7	TRISB6	TRISB5	TRISB4	TRISB3	TRISB2	TRISB1	TRISB0	1111 1111 1111 1111
PORTB	02C8	RB15	RB14	RB13	RB12	RB11	RB10	RB9	RB8	RB7	RB6	RB5	RB4	RB3	RB2	RB1	RB0	0000 0000 0000 0000
LATB	02CB	LATB15	LATB14	LATB13	LATB12	LATB11	LATB10	LATB9	LATB8	LATB7	LATB6	LATB5	LATB4	LATB3	LATB2	LATB1	LATB0	0000 0000 0000 0000

Legend: — = unimplemented bit, read as '0'
Note 1: Refer to the *"dsPIC30F Family Reference Manual"* (DS70046) for descriptions of register bit fields.

TABLE 8-3: PORTC REGISTER MAP FOR dsPIC30F6011A/6012A(1)

SFR Name	Addr.	Bit 15	Bit 14	Bit 13	Bit 12	Bit 11	Bit 10	Bit 9	Bit 8	Bit 7	Bit 6	Bit 5	Bit 4	Bit 3	Bit 2	Bit 1	Bit 0	Reset State
TRISC	02CC	TRISC15	TRISC14	TRISC13	—	—	—	—	—	—	—	—	—	—	TRISC2	TRISC1	—	1110 0000 0000 0110
PORTC	02CE	RC15	RC14	RC13	—	—	—	—	—	—	—	—	—	—	RC2	RC1	—	0000 0000 0000 0000
LATC	02D0	LATC15	LATC14	LATC13	—	—	—	—	—	—	—	—	—	—	LATC2	LATC1	—	0000 0000 0000 0000

Legend: — = unimplemented bit, read as '0'
Note 1: Refer to the *"dsPIC30F Family Reference Manual"* (DS70046) for descriptions of register bit fields.

TABLE 8-4: PORTC REGISTER MAP FOR dsPIC30F6013A/6014A(1)

SFR Name	Addr.	Bit 15	Bit 14	Bit 13	Bit 12	Bit 11	Bit 10	Bit 9	Bit 8	Bit 7	Bit 6	Bit 5	Bit 4	Bit 3	Bit 2	Bit 1	Bit 0	Reset State
TRISC	02CC	TRISC15	TRISC14	TRISC13	—	—	—	—	—	—	—	—	TRISC4	TRISC3	TRISC2	TRISC1	—	1110 0000 0001 1110
PORTC	02CE	RC15	RC14	RC13	—	—	—	—	—	—	—	—	RC4	RC3	RC2	RC1	—	0000 0000 0000 0000
LATC	02D0	LATC15	LATC14	LATC13	—	—	—	—	—	—	—	—	LATC4	LATC3	LATC2	LATC1	—	0000 0000 0000 0000

Legend: — = unimplemented bit, read as '0'
Note 1: Refer to the *"dsPIC30F Family Reference Manual"* (DS70046) for descriptions of register bit fields.

© 2011 Microchip Technology Inc.

Downloaded from Arrow.com.

TABLE 8-5: PORTD REGISTER MAP FOR dsPIC30F6011A/6012A(1)

SFR Name	Addr.	Bit 15	Bit 14	Bit 13	Bit 12	Bit 11	Bit 10	Bit 9	Bit 8	Bit 7	Bit 6	Bit 5	Bit 4	Bit 3	Bit 2	Bit 1	Bit 0	Reset State
TRISD	02D2	—	—	—	—	TRISD11	TRISD10	TRISD9	TRISD8	TRISD7	TRISD6	TRISD5	TRISD4	TRISD3	TRISD2	TRISD1	TRISD0	0000 1111 1111 1111
PORTD	02D4	—	—	—	—	RD11	RD10	RD9	RD8	RD7	RD6	RD5	RD4	RD3	RD2	RD1	RD0	0000 0000 0000 0000
LATD	02D6	—	—	—	—	LATD11	LATD10	LATD9	LATD8	LATD7	LATD6	LATD5	LATD4	LATD3	LATD2	LATD1	LATD0	0000 0000 0000 0000

Legend: u = uninitialized bit; — = unimplemented bit, read as '0'
Note 1: Refer to the *"dsPIC30F Family Reference Manual"* (DS70046) for descriptions of register bit fields.

TABLE 8-6: PORTD REGISTER MAP FOR dsPIC30F6013A/6014A(1)

SFR Name	Addr.	Bit 15	Bit 14	Bit 13	Bit 12	Bit 11	Bit 10	Bit 9	Bit 8	Bit 7	Bit 6	Bit 5	Bit 4	Bit 3	Bit 2	Bit 1	Bit 0	Reset State
TRISD	02D2	TRISD15	TRISD14	TRISD13	TRISD12	TRISD11	TRISD10	TRISD9	TRISD8	TRISD7	TRISD6	TRISD5	TRISD4	TRISD3	TRISD2	TRISD1	TRISD0	1111 1111 1111 1111
PORTD	02D4	RD15	RD14	RD13	RD12	RD11	RD10	RD9	RD8	RD7	RD6	RD5	RD4	RD3	RD2	RD1	RD0	0000 0000 0000 0000
LATD	02D6	LATD15	LATD14	LATD13	LATD12	LATD11	LATD10	LATD9	LATD8	LATD7	LATD6	LATD5	LATD4	LATD3	LATD2	LATD1	LATD0	0000 0000 0000 0000

Legend: u = uninitialized bit; — = unimplemented bit, read as '0'
Note 1: Refer to the *"dsPIC30F Family Reference Manual"* (DS70046) for descriptions of register bit fields.

TABLE 8-7: PORTF REGISTER MAP FOR dsPIC30F6011A/6012A(1)

SFR Name	Addr.	Bit 15	Bit 14	Bit 13	Bit 12	Bit 11	Bit 10	Bit 9	Bit 8	Bit 7	Bit 6	Bit 5	Bit 4	Bit 3	Bit 2	Bit 1	Bit 0	Reset State
TRISF	02DE	—	—	—	—	—	—	—	—	—	TRISF6	TRISF5	TRISF4	TRISF3	TRISF2	TRISF1	TRISF0	0000 0000 0111 1111
PORTF	02E0	—	—	—	—	—	—	—	—	—	RF6	RF5	RF4	RF3	RF2	RF1	RF0	0000 0000 0000 0000
LATF	02E2	—	—	—	—	—	—	—	—	—	LATF6	LATF5	LATF4	LATF3	LATF2	LATF1	LATF0	0000 0000 0000 0000

Legend: u = uninitialized bit; — = unimplemented bit, read as '0'
Note 1: Refer to the *"dsPIC30F Family Reference Manual"* (DS70046) for descriptions of register bit fields.

TABLE 8-8: PORTF REGISTER MAP FOR dsPIC30F6013A/6014A(1)

SFR Name	Addr.	Bit 15	Bit 14	Bit 13	Bit 12	Bit 11	Bit 10	Bit 9	Bit 8	Bit 7	Bit 6	Bit 5	Bit 4	Bit 3	Bit 2	Bit 1	Bit 0	Reset State
TRISF	02DE	—	—	—	—	—	—	—	TRISF8	TRISF7	TRISF6	TRISF5	TRISF4	TRISF3	TRISF2	TRISF1	TRISF0	0000 0001 1111 1111
PORTF	02E0	—	—	—	—	—	—	—	RF8	RF7	RF6	RF5	RF4	RF3	RF2	RF1	RF0	0000 0000 0000 0000
LATF	02E2	—	—	—	—	—	—	—	LATF8	LATF7	LATF6	LATF5	LATF4	LATF3	LATF2	LATF1	LATF0	0000 0000 0000 0000

Legend: u = uninitialized bit; — = unimplemented bit, read as '0'
Note 1: Refer to the *"dsPIC30F Family Reference Manual"* (DS70046) for descriptions of register bit fields.

© 2011 Microchip Technology Inc.
Downloaded from Arrow.com.

TABLE 8-9: PORTG REGISTER MAP FOR dsPIC30F6011A/6012A/6013A/6014A(1)

SFR Name	Addr.	Bit 15	Bit 14	Bit 13	Bit 12	Bit 11	Bit 10	Bit 9	Bit 8	Bit 7	Bit 6	Bit 5	Bit 4	Bit 3	Bit 2	Bit 1	Bit 0	Reset State
TRISG	02E4	TRISG15	TRISG14	TRISG13	TRISG12	—	—	TRISG9	TRISG8	TRISG7	TRISG6	—	—	TRISG3	TRISG2	TRISG1	TRISG0	1111 0011 1100 1111
PORTG	02E6	RG15	RG14	RG13	RG12	—	—	RG9	RG8	RG7	RG6	—	—	RG3	RG2	RG1	RG0	0000 0000 0000 0000
LATG	02E8	LATG15	LATG14	LATG13	LATG12	—	—	LATG9	LATG8	LATG7	LATG6	—	—	LATG3	LATG2	LATG1	LATG0	0000 0000 0000 0000

Legend: u = uninitialized bit; — = unimplemented bit, read as '0'

Note 1: Refer to the *"dsPIC30F Family Reference Manual"* (DS70046) for descriptions of register bit fields.

Downloaded from Arrow.com.

8.3 Input Change Notification Module

The input change notification module provides the dsPIC30F devices the ability to generate interrupt requests to the processor, in response to a change of state on selected input pins. This module is capable of detecting input change of states even in Sleep mode, when the clocks are disabled. There are up to 24 external signals (CN0 through CN23) that may be selected (enabled) for generating an interrupt request on a change of state.

TABLE 8-10: INPUT CHANGE NOTIFICATION REGISTER MAP FOR dsPIC30F6011A/6012A (BITS 15-8)(1)

SFR Name	Addr.	Bit 15	Bit 14	Bit 13	Bit 12	Bit 11	Bit 10	Bit 9	Bit 8	Reset State
CNEN1	00C0	CN15IE	CN14IE	CN13IE	CN12IE	CN11IE	CN10IE	CN9IE	CN8IE	0000 0000 0000 0000
CNEN2	00C2	—	—	—	—	—	—	—	—	0000 0000 0000 0000
CNPU1	00C4	CN15PUE	CN14PUE	CN13PUE	CN12PUE	CN11PUE	CN10PUE	CN9PUE	CN8PUE	0000 0000 0000 0000
CNPU2	00C6	—	—	—	—	—	—	—	—	0000 0000 0000 0000

Legend: u = uninitialized bit; — = unimplemented bit, read as '0'
Note 1: Refer to the *"dsPIC30F Family Reference Manual"* (DS70046) for descriptions of register bit fields.

TABLE 8-11: INPUT CHANGE NOTIFICATION REGISTER MAP FOR dsPIC30F6011A/6012A (BITS 7-0)(1)

SFR Name	Addr.	Bit 7	Bit 6	Bit 5	Bit 4	Bit 3	Bit 2	Bit 1	Bit 0	Reset State
CNEN1	00C0	CN7IE	CN6IE	CN5IE	CN4IE	CN3IE	CN2IE	CN1IE	CN0IE	0000 0000 0000 0000
CNEN2	00C2	—	—	—	—	—	CN18IE	CN17IE	CN16IE	0000 0000 0000 0000
CNPU1	00C4	CN7PUE	CN6PUE	CN5PUE	CN4PUE	CN3PUE	CN2PUE	CN1PUE	CN0PUE	0000 0000 0000 0000
CNPU2	00C6	—	—	—	—	—	CN18PUE	CN17PUE	CN16PUE	0000 0000 0000 0000

Legend: u = uninitialized bit; — = unimplemented bit, read as '0'
Note 1: Refer to the *"dsPIC30F Family Reference Manual"* (DS70046) for descriptions of register bit fields.

TABLE 8-12: INPUT CHANGE NOTIFICATION REGISTER MAP FOR dsPIC30F6013A/6014A (BITS 15-8)(1)

SFR Name	Addr.	Bit 15	Bit 14	Bit 13	Bit 12	Bit 11	Bit 10	Bit 9	Bit 8	Reset State
CNEN1	00C0	CN15IE	CN14IE	CN13IE	CN12IE	CN11IE	CN10IE	CN9IE	CN8IE	0000 0000 0000 0000
CNEN2	00C2	—	—	—	—	—	—	—	—	0000 0000 0000 0000
CNPU1	00C4	CN15PUE	CN14PUE	CN13PUE	CN12PUE	CN11PUE	CN10PUE	CN9PUE	CN8PUE	0000 0000 0000 0000
CNPU2	00C6	—	—	—	—	—	—	—	—	0000 0000 0000 0000

Legend: u = uninitialized bit; — = unimplemented bit, read as '0'
Note 1: Refer to the *"dsPIC30F Family Reference Manual"* (DS70046) for descriptions of register bit fields.

TABLE 8-13: INPUT CHANGE NOTIFICATION REGISTER MAP FOR dsPIC30F6013A/6014A (BITS 7-0)(1)

SFR Name	Addr.	Bit 7	Bit 6	Bit 5	Bit 4	Bit 3	Bit 2	Bit 1	Bit 0	Reset State
CNEN1	00C0	CN7IE	CN6IE	CN5IE	CN4IE	CN3IE	CN2IE	CN1IE	CN0IE	0000 0000 0000 0000
CNEN2	00C2	CN23IE	CN22IE	CN21IE	CN20IE	CN19IE	CN18IE	CN17IE	CN16IE	0000 0000 0000 0000
CNPU1	00C4	CN7PUE	CN6PUE	CN5PUE	CN4PUE	CN3PUE	CN2PUE	CN1PUE	CN0PUE	0000 0000 0000 0000
CNPU2	00C6	CN23PUE	CN22PUE	CN21PUE	CN20PUE	CN19PUE	CN18PUE	CN17PUE	CN16PUE	0000 0000 0000 0000

Legend: u = uninitialized bit; — = unimplemented bit, read as '0'
Note 1: Refer to the *"dsPIC30F Family Reference Manual"* (DS70046) for descriptions of register bit fields.

© 2011 Microchip Technology Inc.

Downloaded from Arrow.com.

9.0 TIMER1 MODULE

Note: This data sheet summarizes features of this group of dsPIC30F devices and is not intended to be a complete reference source. For more information on the CPU, peripherals, register descriptions and general device functionality, refer to the "*dsPIC30F Family Reference Manual*" (DS70046).

This section describes the 16-bit General Purpose Timer1 module and associated operational modes. Figure 9-1 depicts the simplified block diagram of the 16-bit Timer1 module.

The following sections provide a detailed description including setup and control registers, along with associated block diagrams for the operational modes of the timers.

The Timer1 module is a 16-bit timer which can serve as the time counter for the real-time clock, or operate as a free-running interval timer/counter. The 16-bit timer has the following modes:

- 16-bit Timer
- 16-bit Synchronous Counter
- 16-bit Asynchronous Counter

Further, the following operational characteristics are supported:

- Timer gate operation
- Selectable prescaler settings
- Timer operation during CPU Idle and Sleep modes
- Interrupt on 16-bit Period register match or falling edge of external gate signal

These Operating modes are determined by setting the appropriate bit(s) in the 16-bit SFR, T1CON.

Figure 9-1 presents a block diagram of the 16-bit Timer1 module.

16-bit Timer Mode: In the 16-bit Timer mode, the timer increments on every instruction cycle up to a match value preloaded into the Period register PR1, then resets to '0' and continues to count.

When the CPU goes into the Idle mode, the timer will stop incrementing unless the TSIDL (T1CON<13>) bit = 0. If TSIDL = 1, the timer module logic will resume the incrementing sequence upon termination of the CPU Idle mode.

16-bit Synchronous Counter Mode: In the 16-bit Synchronous Counter mode, the timer increments on the rising edge of the applied external clock signal which is synchronized with the internal phase clocks. The timer counts up to a match value preloaded in PR1, then resets to '0' and continues.

When the CPU goes into the Idle mode, the timer will stop incrementing unless the respective TSIDL bit = 0. If TSIDL = 1, the timer module logic will resume the incrementing sequence upon termination of the CPU Idle mode.

16-bit Asynchronous Counter Mode: In the 16-bit Asynchronous Counter mode, the timer increments on every rising edge of the applied external clock signal. The timer counts up to a match value preloaded in PR1, then resets to '0' and continues.

When the timer is configured for the Asynchronous mode of operation and the CPU goes into the Idle mode, the timer will stop incrementing if TSIDL = 1.

FIGURE 9-1: 16-BIT TIMER1 MODULE BLOCK DIAGRAM

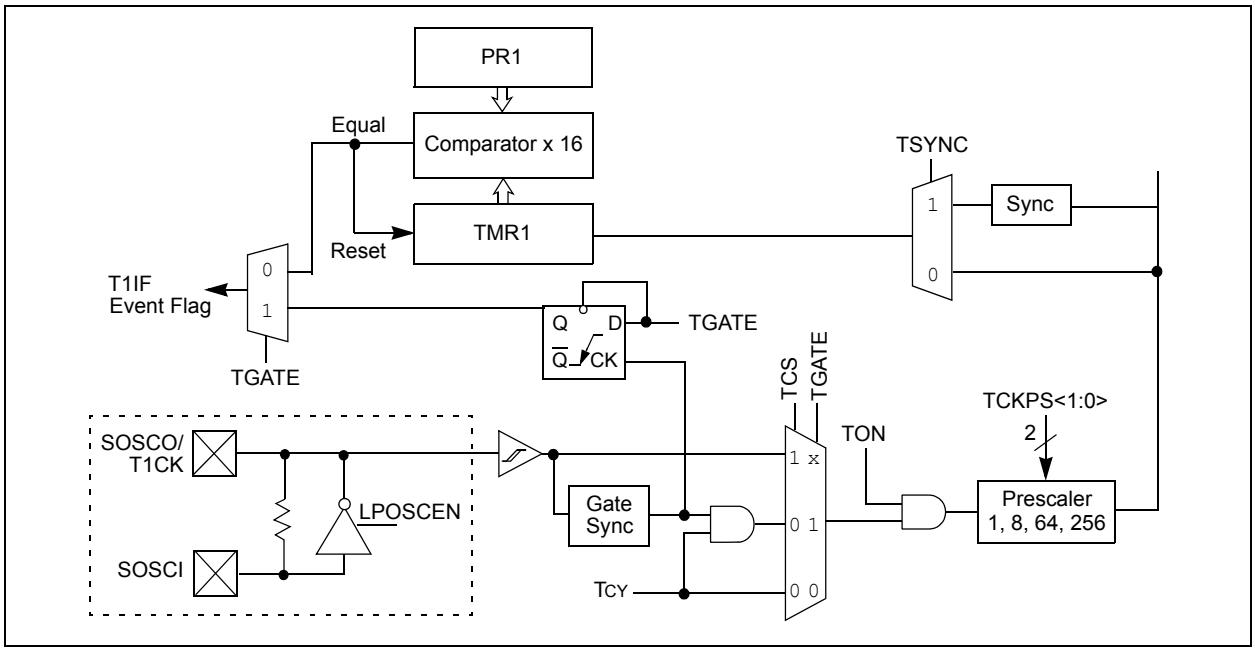

Downloaded from Arrow.com.

9.1 Timer Gate Operation

The 16-bit timer can be placed in the Gated Time Accumulation mode. This mode allows the internal TCY to increment the respective timer when the gate input signal (T1CK pin) is asserted high. Control bit TGATE (T1CON<6>) must be set to enable this mode. The timer must be enabled (TON = 1) and the timer clock source set to internal (TCS = 0).

When the CPU goes into the Idle mode, the timer will stop incrementing unless TSIDL = 0. If TSIDL = 1, the timer will resume the incrementing sequence upon termination of the CPU Idle mode.

9.2 Timer Prescaler

The input clock (FOSC/4 or external clock) to the 16-bit Timer has a prescale option of 1:1, 1:8, 1:64 and 1:256, selected by control bits TCKPS<1:0> (T1CON<5:4>). The prescaler counter is cleared when any of the following occurs:

- A write to the TMR1 register
- A write to the T1CON register
- A device Reset, such as a POR and BOR

However, if the timer is disabled (TON = 0), then the timer prescaler cannot be reset since the prescaler clock is halted.

The TMR1 register is not cleared when the T1CON register is written. It is cleared by writing to the TMR1 register.

9.3 Timer Operation During Sleep Mode

During CPU Sleep mode, the timer will operate if:

- The timer module is enabled (TON = 1) and
- The timer clock source is selected as external (TCS = 1) and
- The TSYNC bit (T1CON<2>) is asserted to a logic '0' which defines the external clock source as asynchronous.

When all three conditions are true, the timer will continue to count up to the Period register and be reset to 0x0000.

When a match between the timer and the Period register occurs, an interrupt can be generated if the respective timer interrupt enable bit is asserted.

9.4 Timer Interrupt

The 16-bit timer has the ability to generate an interrupt on period match. When the timer count matches the Period register, the T1IF bit is asserted and an interrupt will be generated if enabled. The T1IF bit must be cleared in software. The timer interrupt flag, T1IF, is located in the IFS0 Control register in the interrupt controller.

When the Gated Time Accumulation mode is enabled, an interrupt will also be generated on the falling edge of the gate signal (at the end of the accumulation cycle).

Enabling an interrupt is accomplished via the respective timer interrupt enable bit, T1IE. The timer interrupt enable bit is located in the IEC0 Control register in the interrupt controller.

9.5 Real-Time Clock

Timer1, when operating in Real-Time Clock (RTC) mode, provides time of day and event time-stamping capabilities. Key operational features of the RTC are:

- Operation from 32 kHz LP oscillator
- 8-bit prescaler
- Low power
- Real-Time Clock interrupts

These Operating modes are determined by setting the appropriate bit(s) in the T1CON Control register.

FIGURE 9-2: RECOMMENDED COMPONENTS FOR TIMER1 LP OSCILLATOR RTC

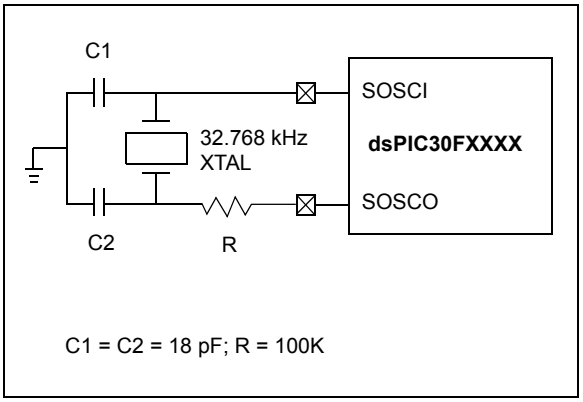

© 2011 Microchip Technology Inc.

Downloaded from Arrow.com.

9.5.1 RTC OSCILLATOR OPERATION

When the TON = 1, TCS = 1 and TGATE = 0, the timer increments on the rising edge of the 32 kHz LP oscillator output signal, up to the value specified in the Period register and is then reset to '0'.

The TSYNC bit must be asserted to a logic '0' (Asynchronous mode) for correct operation.

Enabling the LPOSCEN bit (OSCCON<1>) will disable the normal Timer and Counter modes and enable a timer carry-out wake-up event.

When the CPU enters Sleep mode, the RTC will continue to operate provided the 32 kHz external crystal oscillator is active and the control bits have not been changed. The TSIDL bit should be cleared to '0' in order for RTC to continue operation in Idle mode.

9.5.2 RTC INTERRUPTS

When an interrupt event occurs, the respective interrupt flag, T1IF, is asserted and an interrupt will be generated if enabled. The T1IF bit must be cleared in software. The respective Timer interrupt flag, T1IF, is located in the IFS0 status register in the interrupt controller.

Enabling an interrupt is accomplished via the respective timer interrupt enable bit, T1IE. The timer interrupt enable bit is located in the IEC0 Control register in the interrupt controller.

Downloaded from Arrow.com.

TABLE 9-1: TIMER1 REGISTER MAP(1)

SFR Name	Addr.	Bit 15	Bit 14	Bit 13	Bit 12	Bit 11	Bit 10	Bit 9	Bit 8	Bit 7	Bit 6	Bit 5	Bit 4	Bit 3	Bit 2	Bit 1	Bit 0	Reset State
TMR1	0100	Timer1 Register																uuuu uuuu uuuu uuuu
PR1	0102	Period Register 1																1111 1111 1111 1111
T1CON	0104	TON	—	TSIDL	—	—	—	—	—	—	TGATE	TCKPS1	TCKPS0	—	TSYNC	TCS	—	0000 0000 0000 0000

Legend: u = uninitialized bit; — = unimplemented bit, read as '0'

Note 1: Refer to the *"dsPIC30F Family Reference Manual"* (DS70046) for descriptions of register bit fields.

© 2011 Microchip Technology Inc.

Downloaded from Arrow.com.

10.0 TIMER2/3 MODULE

Note: This data sheet summarizes features of this group of dsPIC30F devices and is not intended to be a complete reference source. For more information on the CPU, peripherals, register descriptions and general device functionality, refer to the "*dsPIC30F Family Reference Manual*" (DS70046).

This section describes the 32-bit General Purpose Timer module (Timer2/3) and associated Operational modes. Figure 10-1 depicts the simplified block diagram of the 32-bit Timer2/3 module. Figure 10-2 and Figure 10-3 show Timer2/3 configured as two independent 16-bit timers, Timer2 and Timer3, respectively.

The Timer2/3 module is a 32-bit timer (which can be configured as two 16-bit timers) with selectable Operating modes. These timers are utilized by other peripheral modules, such as:

- Input Capture
- Output Compare/Simple PWM

The following sections provide a detailed description, including setup and control registers, along with associated block diagrams for the Operational modes of the timers.

The 32-bit timer has the following modes:

- Two independent 16-bit timers (Timer2 and Timer3) with all 16-bit Operating modes (except Asynchronous Counter mode)
- Single 32-bit timer operation
- Single 32-bit synchronous counter

Further, the following operational characteristics are supported:

- ADC event trigger
- Timer gate operation
- Selectable prescaler settings
- Timer operation during Idle and Sleep modes
- Interrupt on a 32-bit period register match

These Operating modes are determined by setting the appropriate bit(s) in the 16-bit T2CON and T3CON SFRs.

For 32-bit timer/counter operation, Timer2 is the lsw and Timer3 is the most significant word (msw) of the 32-bit timer.

Note: For 32-bit timer operation, T3CON control bits are ignored. Only T2CON control bits are used for setup and control. Timer2 clock and gate inputs are utilized for the 32-bit timer module but an interrupt is generated with the Timer3 interrupt flag (T3IF) and the interrupt is enabled with the Timer3 interrupt enable bit (T3IE).

16-bit Timer Mode: In the 16-bit mode, Timer2 and Timer3 can be configured as two independent 16-bit timers. Each timer can be set up in either 16-bit Timer mode or 16-bit Synchronous Counter mode. See **Section 9.0 "Timer1 Module"**, Timer1 Module for details on these two Operating modes.

The only functional difference between Timer2 and Timer3 is that Timer2 provides synchronization of the clock prescaler output. This is useful for high frequency external clock inputs.

32-bit Timer Mode: In the 32-bit Timer mode, the timer increments on every instruction cycle, up to a match value preloaded into the combined 32-bit Period register PR3/PR2, then resets to '0' and continues to count.

For synchronous 32-bit reads of the Timer2/Timer3 pair, reading the lsw (TMR2 register) will cause the msw to be read and latched into a 16-bit holding register, termed TMR3HLD.

For synchronous 32-bit writes, the holding register (TMR3HLD) must first be written to. When followed by a write to the TMR2 register, the contents of TMR3HLD will be transferred and latched into the MSB of the 32-bit timer (TMR3).

32-bit Synchronous Counter Mode: In the 32-bit Synchronous Counter mode, the timer increments on the rising edge of the applied external clock signal which is synchronized with the internal phase clocks. The timer counts up to a match value preloaded in the combined 32-bit period register PR3/PR2, then resets to '0' and continues.

When the timer is configured for the Synchronous Counter mode of operation and the CPU goes into the Idle mode, the timer will stop incrementing unless the the TSIDL bit (T2CON<13>) = 0. If TSIDL = 1, the timer module logic will resume the incrementing sequence upon termination of the CPU Idle mode.

Downloaded from Arrow.com.

FIGURE 10-1: 32-BIT TIMER2/3 BLOCK DIAGRAM

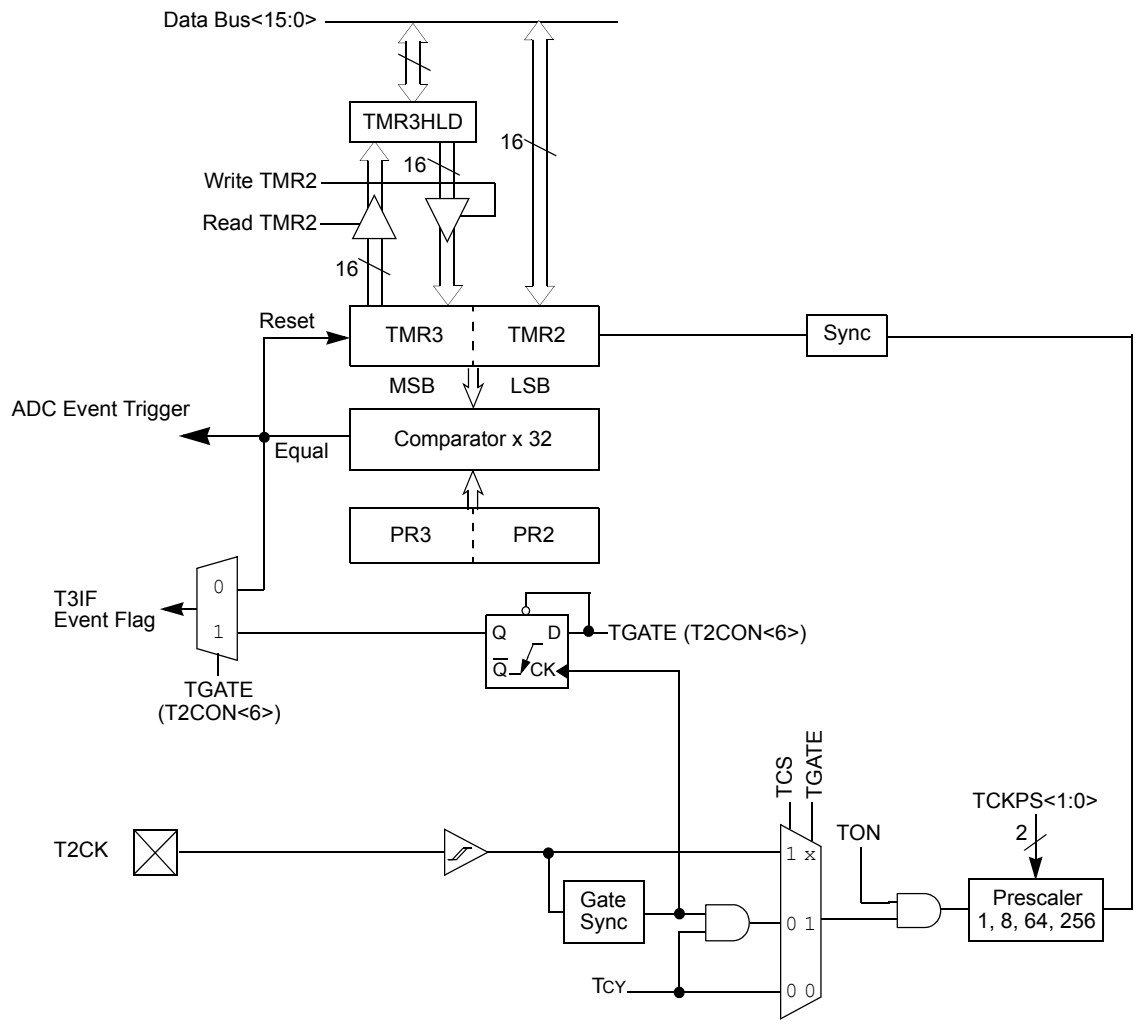

Note: Timer configuration bit T32 (T2CON<3>) must be set to '1' for a 32-bit timer/counter operation. All control bits are respective to the T2CON register.

© 2011 Microchip Technology Inc.

Downloaded from Arrow.com.

FIGURE 10-2: 16-BIT TIMER2 BLOCK DIAGRAM

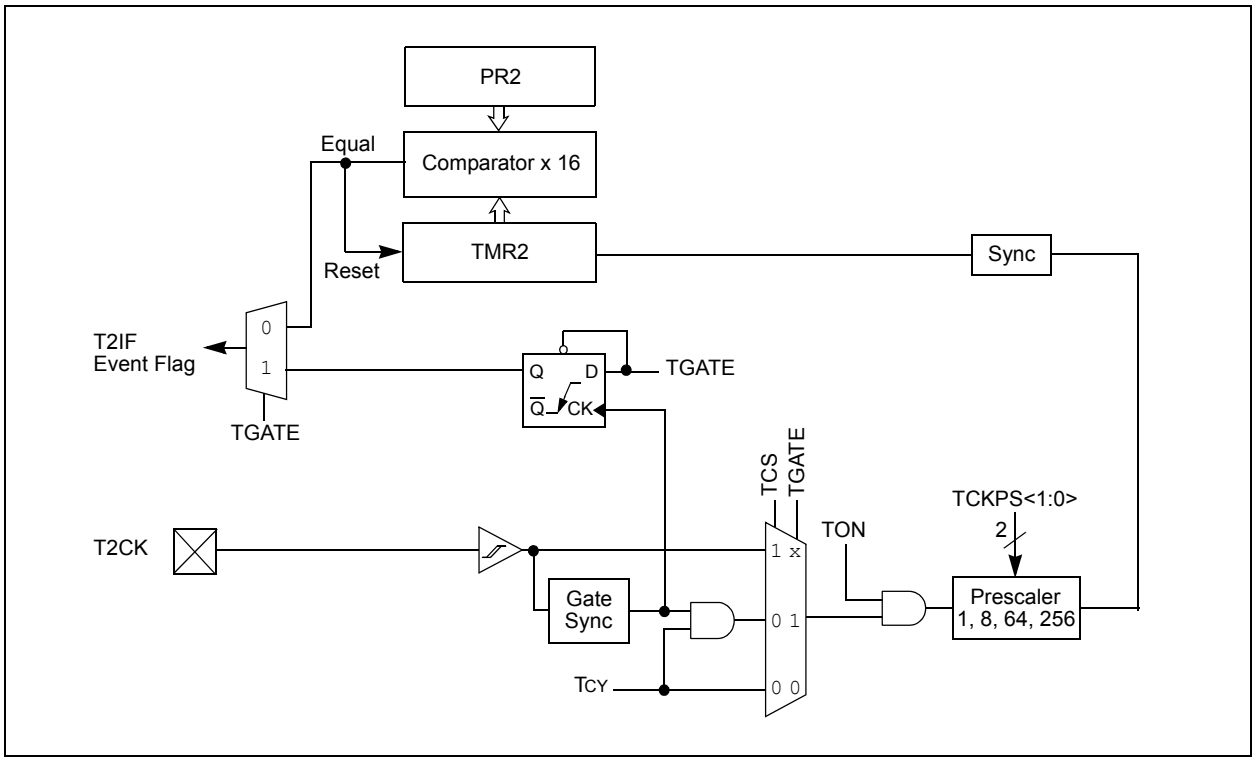

FIGURE 10-3: 16-BIT TIMER3 BLOCK DIAGRAM

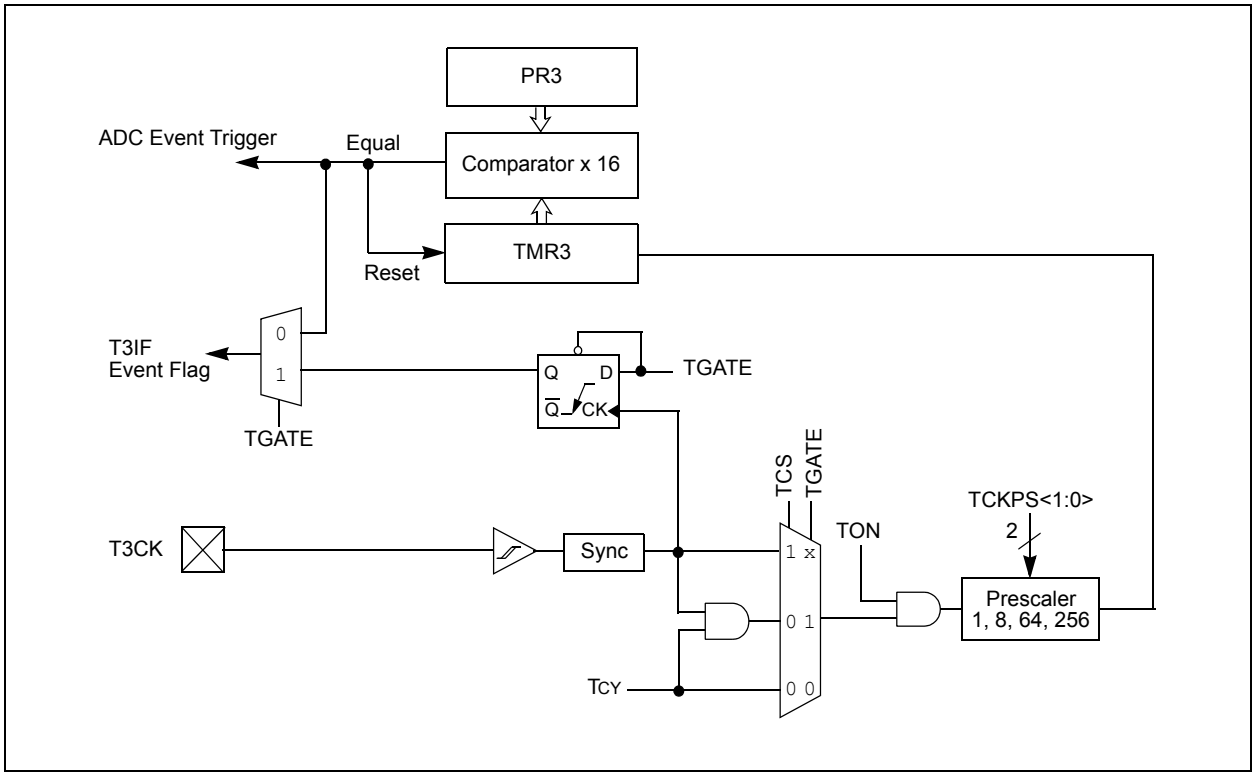

Downloaded from Arrow.com.

10.1 Timer Gate Operation

The 32-bit timer can be placed in the Gated Time Accumulation mode. This mode allows the internal TCY to increment the respective timer when the gate input signal (T2CK pin) is asserted high. Control bit TGATE (T2CON<6>) must be set to enable this mode. When in this mode, Timer2 is the originating clock source. The TGATE setting is ignored for Timer3. The timer must be enabled (TON = 1) and the timer clock source set to internal (TCS = 0).

The falling edge of the external signal terminates the count operation but does not reset the timer. The user must reset the timer in order to start counting from zero.

10.2 ADC Event Trigger

When a match occurs between the 32-bit timer (TMR3/TMR2) and the 32-bit combined period register (PR3/PR2), or between the 16-bit timer TMR3 and the 16-bit period register PR3, a special ADC trigger event signal is generated by Timer3.

10.3 Timer Prescaler

The input clock (FOSC/4 or external clock) to the timer has a prescale option of 1:1, 1:8, 1:64 and 1:256, selected by control bits TCKPS<1:0> (T2CON<5:4> and T3CON<5:4>). For the 32-bit timer operation, the originating clock source is Timer2. The prescaler operation for Timer3 is not applicable in this mode. The prescaler counter is cleared when any of the following occurs:

- A write to the TMR2/TMR3 register
- A write to the T2CON/T3CON register
- A device Reset, such as a POR and BOR

However, if the timer is disabled (TON = 0), then the Timer 2 prescaler cannot be reset since the prescaler clock is halted.

TMR2/TMR3 is not cleared when T2CON/T3CON is written.

10.4 Timer Operation During Sleep Mode

During CPU Sleep mode, the timer will not operate because the internal clocks are disabled.

10.5 Timer Interrupt

The 32-bit timer module can generate an interrupt on period match or on the falling edge of the external gate signal. When the 32-bit timer count matches the respective 32-bit period register, or the falling edge of the external “gate” signal is detected, the T3IF bit (IFS0<7>) is asserted and an interrupt will be generated if enabled. In this mode, the T3IF interrupt flag is used as the source of the interrupt. The T3IF bit must be cleared in software.

Enabling an interrupt is accomplished via the respective timer interrupt enable bit, T3IE (IEC0<7>).

© 2011 Microchip Technology Inc.

Downloaded from Arrow.com.

TABLE 10-1: TIMER2/3 REGISTER MAP(1)

SFR Name	Addr.	Bit 15	Bit 14	Bit 13	Bit 12	Bit 11	Bit 10	Bit 9	Bit 8	Bit 7	Bit 6	Bit 5	Bit 4	Bit 3	Bit 2	Bit 1	Bit 0	Reset State
TMR2	0106	Timer2 Register																uuuu uuuu uuuu uuuu
TMR3HLD	0108	Timer3 Holding Register (for 32-bit timer operations only)																uuuu uuuu uuuu uuuu
TMR3	010A	Timer3 Register																uuuu uuuu uuuu uuuu
PR2	010C	Period Register 2																1111 1111 1111 1111
PR3	010E	Period Register 3																1111 1111 1111 1111
T2CON	0110	TON	—	TSIDL	—	—	—	—	—	—	TGATE	TCKPS1	TCKPS0	T32	—	TCS	—	0000 0000 0000 0000
T3CON	0112	TON	—	TSIDL	—	—	—	—	—	—	TGATE	TCKPS1	TCKPS0	—	—	TCS	—	0000 0000 0000 0000

Legend: u = uninitialized bit; — = unimplemented bit, read as '0'

Note 1: Refer to the *"dsPIC30F Family Reference Manual"* (DS70046) for descriptions of register bit fields.

Downloaded from Arrow.com.

NOTES:

© 2011 Microchip Technology Inc.

Downloaded from Arrow.com.

11.0 TIMER4/5 MODULE

Note: This data sheet summarizes features of this group of dsPIC30F devices and is not intended to be a complete reference source. For more information on the CPU, peripherals, register descriptions and general device functionality, refer to the "*dsPIC30F Family Reference Manual*" (DS70046).

This section describes the second 32-bit General Purpose Timer module (Timer4/5) and associated Operational modes. Figure 11-1 depicts the simplified block diagram of the 32-bit Timer4/5 module. Figure 11-2 and Figure 11-3 show Timer4/5 configured as two independent 16-bit timers, Timer4 and Timer5, respectively.

The Timer4/5 module is similar in operation to the Timer2/3 module. However, there are some differences which are as follows:

- The Timer4/5 module does not support the ADC event trigger feature
- Timer4/5 can not be utilized by other peripheral modules, such as input capture and output compare

The Operating modes of the Timer4/5 module are determined by setting the appropriate bit(s) in the 16-bit T4CON and T5CON SFRs.

For 32-bit timer/counter operation, Timer4 is the lsw and Timer5 is the msw of the 32-bit timer.

Note: For 32-bit timer operation, T5CON control bits are ignored. Only T4CON control bits are used for setup and control. Timer4 clock and gate inputs are utilized for the 32-bit timer module but an interrupt is generated with the Timer5 interrupt flag (T5IF) and the interrupt is enabled with the Timer5 interrupt enable bit (T5IE).

FIGURE 11-1: 32-BIT TIMER4/5 BLOCK DIAGRAM

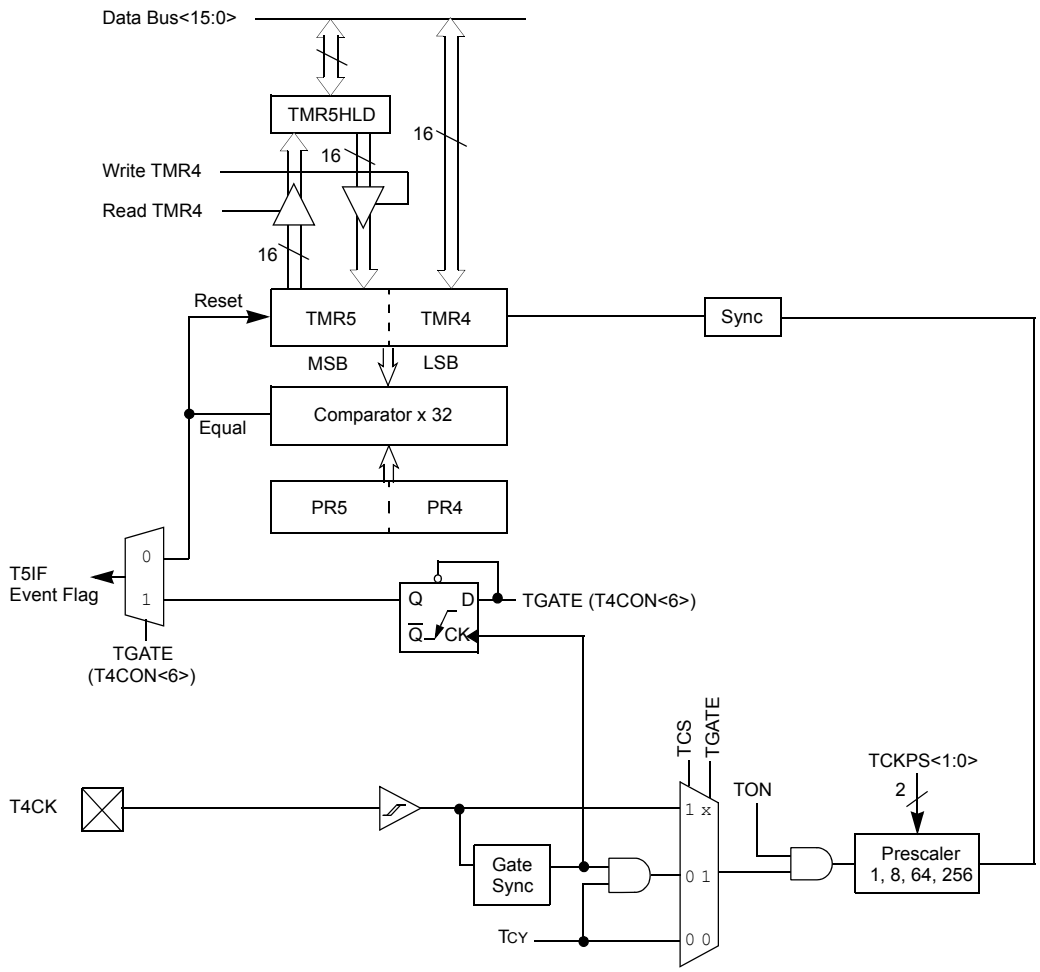

Note: Timer configuration bit T32 (T4CON<3>) must be set to '1' for a 32-bit timer/counter operation. All control bits are respective to the T4CON register.

Downloaded from Arrow.com.

FIGURE 11-2: 16-BIT TIMER4 BLOCK DIAGRAM

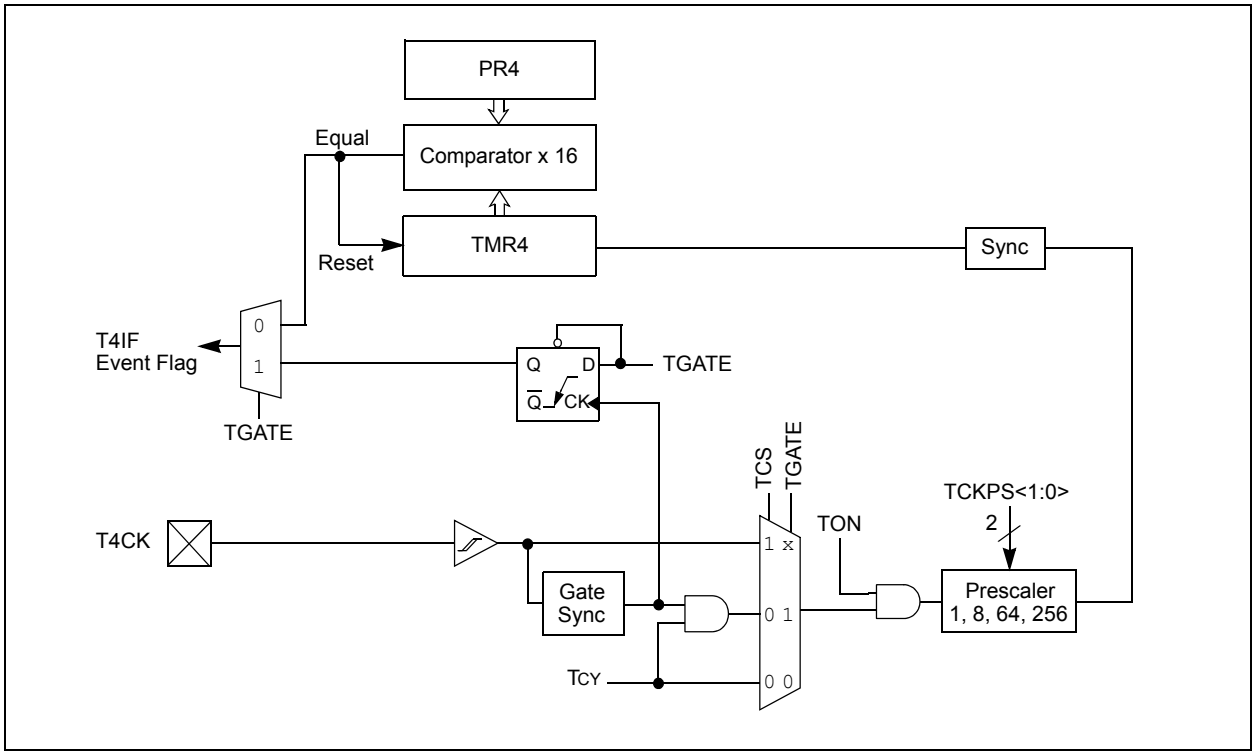

FIGURE 11-3: 16-BIT TIMER5 BLOCK DIAGRAM

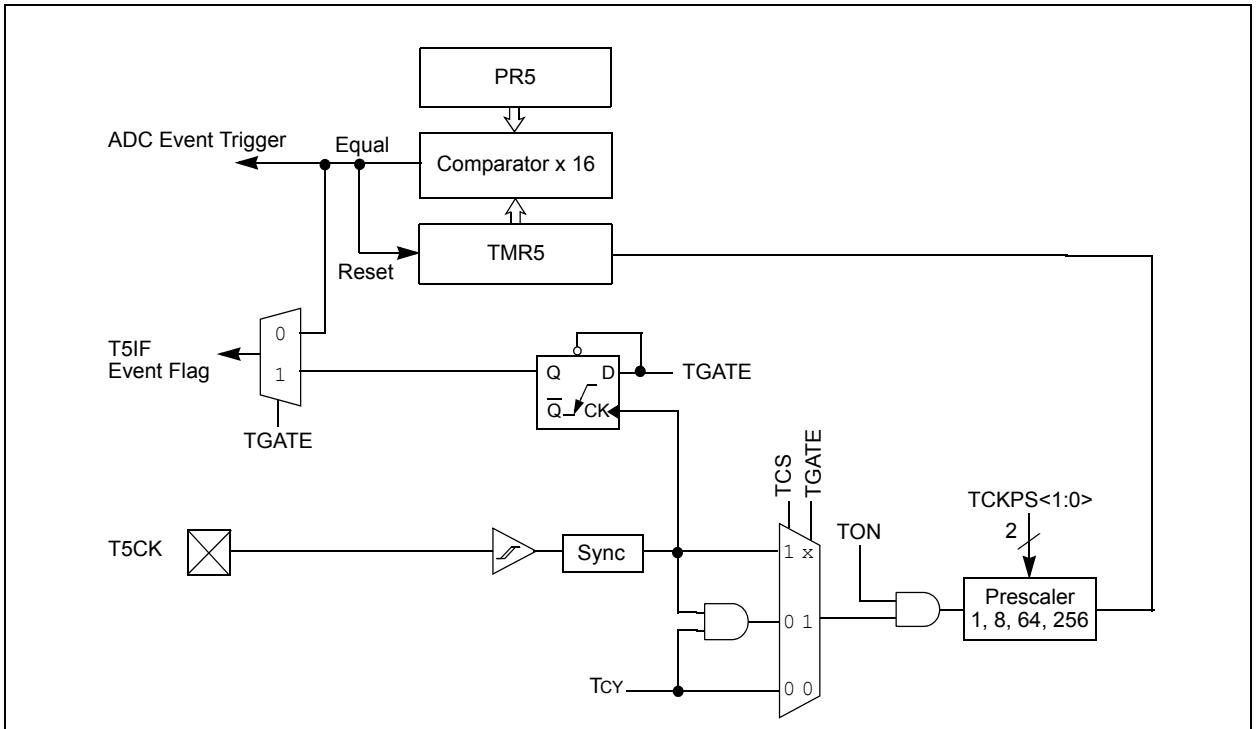

Note: In the dsPIC30F6011A and dsPIC30F6012A devices, there is no T5CK pin. Therefore, in this device the following modes should not be used for Timer5:

TCS = 1 (16-bit Counter)

TCS = 0, TGATE = 1 (Gated Time Accumulation)

© 2011 Microchip Technology Inc.

Downloaded from Arrow.com.

TABLE 11-1: TIMER4/5 REGISTER MAP(1)

SFR Name	Addr.	Bit 15	Bit 14	Bit 13	Bit 12	Bit 11	Bit 10	Bit 9	Bit 8	Bit 7	Bit 6	Bit 5	Bit 4	Bit 3	Bit 2	Bit 1	Bit 0	Reset State
TMR4	0114	Timer 4 Register																uuuu uuuu uuuu uuuu
TMR5HLD	0116	Timer 5 Holding Register (for 32-bit operations only)																uuuu uuuu uuuu uuuu
TMR5	0118	Timer 5 Register																uuuu uuuu uuuu uuuu
PR4	011A	Period Register 4																1111 1111 1111 1111
PR5	011C	Period Register 5																1111 1111 1111 1111
T4CON	011E	TON	—	TSIDL	—	—	—	—	—	—	TGATE	TCKPS1	TCKPS0	T32	—	TCS	—	0000 0000 0000 0000
T5CON	0120	TON	—	TSIDL	—	—	—	—	—	—	TGATE	TCKPS1	TCKPS0	—	—	TCS	—	0000 0000 0000 0000

Legend: u = uninitialized bit; — = unimplemented bit, read as '0'

Note 1: Refer to the *"dsPIC30F Family Reference Manual"* (DS70046) for descriptions of register bit fields.

Downloaded from Arrow.com.

NOTES:

© 2011 Microchip Technology Inc.

Downloaded from Arrow.com.

12.0 INPUT CAPTURE MODULE

Note: This data sheet summarizes features of this group of dsPIC30F devices and is not intended to be a complete reference source. For more information on the CPU, peripherals, register descriptions and general device functionality, refer to the "*dsPIC30F Family Reference Manual*" (DS70046).

This section describes the input capture module and associated Operational modes. The features provided by this module are useful in applications requiring frequency (period) and pulse measurement. Figure 12-1 depicts a block diagram of the input capture module. Input capture is useful for such modes as:

- Frequency/Period/Pulse Measurements
- Additional Sources of External Interrupts

The key operational features of the input capture module are:

- Simple Capture Event mode
- Timer2 and Timer3 mode selection
- Interrupt on input capture event

These Operating modes are determined by setting the appropriate bits in the ICxCON register (where x = 1,2,...,N). The dsPIC DSC devices contain up to 8 capture channels (i.e., the maximum value of N is 8).

12.1 Simple Capture Event Mode

The simple capture events in the dsPIC30F product family are:

- Capture every falling edge
- Capture every rising edge
- Capture every 4th rising edge
- Capture every 16th rising edge
- Capture every rising and falling edge

These simple Input Capture modes are configured by setting the appropriate bits ICM<2:0> (ICxCON<2:0>).

12.1.1 CAPTURE PRESCALER

There are four input capture prescaler settings specified by bits ICM<2:0> (ICxCON<2:0>). Whenever the capture channel is turned off, the prescaler counter will be cleared. In addition, any Reset will clear the prescaler counter.

FIGURE 12-1: INPUT CAPTURE MODE BLOCK DIAGRAM

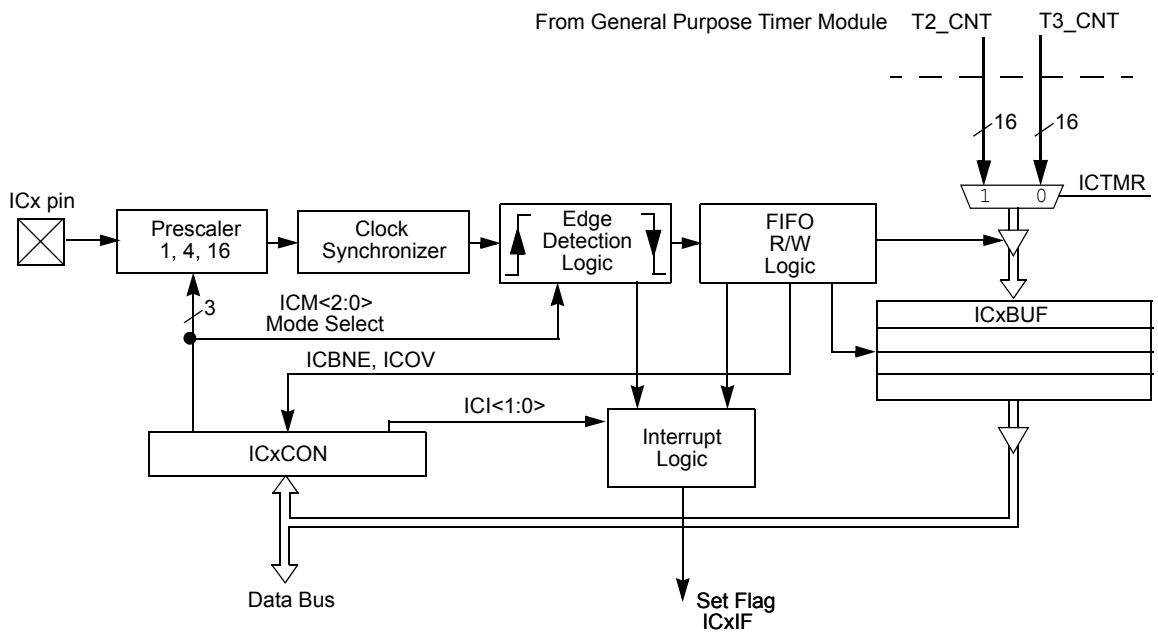

Note: Where 'x' is shown, reference is made to the registers or bits associated to the respective input capture channels 1 through N.

Downloaded from Arrow.com.

12.1.2 CAPTURE BUFFER OPERATION

Each capture channel has an associated FIFO buffer which is four 16-bit words deep. There are two status flags which provide status on the FIFO buffer:

- ICBFNE – Input Capture Buffer Not Empty
- ICOV – Input Capture Overflow

The ICBFNE will be set on the first input capture event and remain set until all capture events have been read from the FIFO. As each word is read from the FIFO, the remaining words are advanced by one position within the buffer.

In the event that the FIFO is full with four capture events and a fifth capture event occurs prior to a read of the FIFO, an overflow condition will occur and the ICOV bit will be set to a logic '1'. The fifth capture event is lost and is not stored in the FIFO. No additional events will be captured until all four events have been read from the buffer.

If a FIFO read is performed after the last read and no new capture event has been received, the read will yield indeterminate results.

12.1.3 TIMER2 AND TIMER3 SELECTION MODE

The input capture module consists of up to 8 input capture channels. Each channel can select between one of two timers for the time base, Timer2 or Timer3.

Selection of the timer resource is accomplished through SFR bit, ICTMR (ICxCON<7>). Timer3 is the default timer resource available for the input capture module.

12.1.4 HALL SENSOR MODE

When the input capture module is set for capture on every edge, rising and falling, ICM<2:0> = 001, the following operations are performed by the input capture logic:

- The input capture interrupt flag is set on every edge, rising and falling.
- The interrupt on Capture mode setting bits, ICI<1:0>, is ignored since every capture generates an interrupt.
- A capture overflow condition is not generated in this mode.

12.2 Input Capture Operation During Sleep and Idle Modes

An input capture event will generate a device wake-up or interrupt, if enabled, if the device is in CPU Idle or Sleep mode.

Independent of the timer being enabled, the input capture module will wake-up from the CPU Sleep or Idle mode when a capture event occurs if ICM<2:0> = 111 and the interrupt enable bit is asserted. The same wake-up can generate an interrupt if the conditions for processing the interrupt have been satisfied. The wake-up feature is useful as a method of adding extra external pin interrupts.

12.2.1 INPUT CAPTURE IN CPU SLEEP MODE

CPU Sleep mode allows input capture module operation with reduced functionality. In the CPU Sleep mode, the ICI<1:0> bits are not applicable and the input capture module can only function as an external interrupt source.

The capture module must be configured for interrupt only on rising edge (ICM<2:0> = 111) in order for the input capture module to be used while the device is in Sleep mode. The prescale settings of 4:1 or 16:1 are not applicable in this mode.

12.2.2 INPUT CAPTURE IN CPU IDLE MODE

CPU Idle mode allows input capture module operation with full functionality. In the CPU Idle mode, the Interrupt mode selected by the ICI<1:0> bits is applicable, as well as the 4:1 and 16:1 capture prescale settings which are defined by control bits ICM<2:0>. This mode requires the selected timer to be enabled. Moreover, the ICSIDL bit must be asserted to a logic '0'.

If the input capture module is defined as ICM<2:0> = 111 in CPU Idle mode, the input capture pin will serve only as an external interrupt pin.

12.3 Input Capture Interrupts

The input capture channels have the ability to generate an interrupt based upon the selected number of capture events. The selection number is set by control bits ICI<1:0> (ICxCON<6:5>).

Each channel provides an interrupt flag (ICxIF) bit. The respective capture channel interrupt flag is located in the corresponding IFSx status register.

Enabling an interrupt is accomplished via the respective capture channel interrupt enable (ICxIE) bit. The capture interrupt enable bit is located in the corresponding IEC control register.

© 2011 Microchip Technology Inc.

Downloaded from Arrow.com.

TABLE 12-1: INPUT CAPTURE REGISTER MAP(1)

SFR Name	Addr.	Bit 15	Bit 14	Bit 13	Bit 12	Bit 11	Bit 10	Bit 9	Bit 8	Bit 7	Bit 6	Bit 5	Bit 4	Bit 3	Bit 2	Bit 1	Bit 0	Reset State
IC1BUF	0140	Input 1 Capture Register																uuuu uuuu uuuu uuuu
IC1CON	0142	—	—	ICSIDL	—	—	—	—	—	ICTMR	ICI<1:0>		ICOV	ICBNE	ICM<2:0>			0000 0000 0000 0000
IC2BUF	0144	Input 2 Capture Register																uuuu uuuu uuuu uuuu
IC2CON	0146	—	—	ICSIDL	—	—	—	—	—	ICTMR	ICI<1:0>		ICOV	ICBNE	ICM<2:0>			0000 0000 0000 0000
IC3BUF	0148	Input 3 Capture Register																uuuu uuuu uuuu uuuu
IC3CON	014A	—	—	ICSIDL	—	—	—	—	—	ICTMR	ICI<1:0>		ICOV	ICBNE	ICM<2:0>			0000 0000 0000 0000
IC4BUF	014C	Input 4 Capture Register																uuuu uuuu uuuu uuuu
IC4CON	014E	—	—	ICSIDL	—	—	—	—	—	ICTMR	ICI<1:0>		ICOV	ICBNE	ICM<2:0>			0000 0000 0000 0000
IC5BUF	0150	Input 5 Capture Register																uuuu uuuu uuuu uuuu
IC5CON	0152	—	—	ICSIDL	—	—	—	—	—	ICTMR	ICI<1:0>		ICOV	ICBNE	ICM<2:0>			0000 0000 0000 0000
IC6BUF	0154	Input 6 Capture Register																uuuu uuuu uuuu uuuu
IC6CON	0156	—	—	ICSIDL	—	—	—	—	—	ICTMR	ICI<1:0>		ICOV	ICBNE	ICM<2:0>			0000 0000 0000 0000
IC7BUF	0158	Input 7 Capture Register																uuuu uuuu uuuu uuuu
IC7CON	015A	—	—	ICSIDL	—	—	—	—	—	ICTMR	ICI<1:0>		ICOV	ICBNE	ICM<2:0>			0000 0000 0000 0000
IC8BUF	015C	Input 8 Capture Register																uuuu uuuu uuuu uuuu
IC8CON	015E	—	—	ICSIDL	—	—	—	—	—	ICTMR	ICI<1:0>		ICOV	ICBNE	ICM<2:0>			0000 0000 0000 0000

Legend: u = uninitialized bit; — = unimplemented bit, read as '0'

Note 1: Refer to the *"dsPIC30F Family Reference Manual"* (DS70046) for descriptions of register bit fields.

Downloaded from Arrow.com.

NOTES:

© 2011 Microchip Technology Inc.

Downloaded from Arrow.com.

13.0 OUTPUT COMPARE MODULE

Note: This data sheet summarizes features of this group of dsPIC30F devices and is not intended to be a complete reference source. For more information on the CPU, peripherals, register descriptions and general device functionality, refer to the "*dsPIC30F Family Reference Manual*" (DS70046).

This section describes the output compare module and associated operational modes. The features provided by this module are useful in applications requiring operational modes, such as:

- Generation of Variable Width Output Pulses
- Power Factor Correction

Figure 13-1 depicts a block diagram of the output compare module.

The key operational features of the output compare module include:

- Timer2 and Timer3 Selection mode
- Simple Output Compare Match mode
- Dual Output Compare Match mode
- Simple PWM mode
- Output Compare During Sleep and Idle modes
- Interrupt on Output Compare/PWM Event

These Operating modes are determined by setting the appropriate bits in the 16-bit OCxCON SFR (where x = 1,2,3,...,N). The dsPIC DSC devices contain up to 8 compare channels (i.e., the maximum value of N is 8).

OCxRS and OCxR in Figure 13-1 represent the Dual Compare registers. In the Dual Compare mode, the OCxR register is used for the first compare and OCxRS is used for the second compare.

FIGURE 13-1: OUTPUT COMPARE MODE BLOCK DIAGRAM

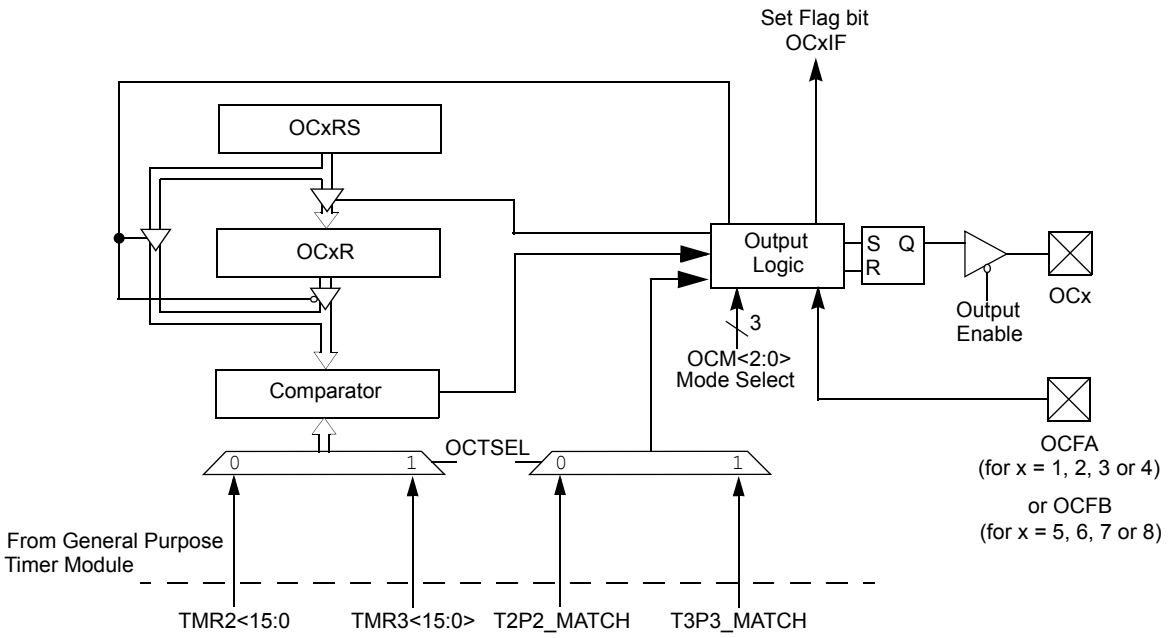

Note: Where 'x' is shown, reference is made to the registers associated with the respective output compare channels 1 through N.

Downloaded from Arrow.com.

13.1 Timer2 and Timer3 Selection Mode

Each output compare channel can select between one of two 16-bit timers, Timer2 or Timer3.

The selection of the timers is controlled by the OCTSEL bit (OCxCON<3>). Timer2 is the default timer resource for the output compare module.

13.2 Simple Output Compare Match Mode

When control bits OCM<2:0> (OCxCON<2:0>) = 001, 010 or 011, the selected output compare channel is configured for one of three simple Output Compare Match modes:

- Compare forces I/O pin low
- Compare forces I/O pin high
- Compare toggles I/O pin

The OCxR register is used in these modes. The OCxR register is loaded with a value and is compared to the selected incrementing timer count. When a compare occurs, one of these Compare Match modes occurs. If the counter resets to zero before reaching the value in OCxR, the state of the OCx pin remains unchanged.

13.3 Dual Output Compare Match Mode

When control bits OCM<2:0> (OCxCON<2:0>) = 100 or 101, the selected output compare channel is configured for one of two Dual Output Compare modes, which are:

- Single Output Pulse mode
- Continuous Output Pulse mode

13.3.1 SINGLE PULSE MODE

For the user to configure the module for the generation of a single output pulse, the following steps are required (assuming timer is off):

1. Determine instruction cycle time TCY.
2. Calculate desired pulse width value based on TCY.
3. Calculate time to start pulse from timer start value of 0x0000.
4. Write pulse width start and stop times into OCxR and OCxRS Compare registers (x denotes channel 1, 2, ...,N).
5. Set Timer Period register to value equal to, or greater than value in OCxRS Compare register.
6. Set OCM<2:0> = 100.
7. Enable timer, TON (TxCON<15>) = 1.

To initiate another single pulse, issue another write to set OCM<2:0> = 100.

13.3.2 CONTINUOUS PULSE MODE

For the user to configure the module for the generation of a continuous stream of output pulses, the following steps are required:

1. Determine instruction cycle time TCY.
2. Calculate desired pulse value based on TCY.
3. Calculate timer to start pulse width from timer start value of 0x0000.
4. Write pulse width start and stop times into OCxR and OCxRS (x denotes channel 1, 2, ...,N) Compare registers, respectively.
5. Set Timer Period register to value equal to, or greater than value in OCxRS Compare register.
6. Set OCM<2:0> = 101.
7. Enable timer, TON (TxCON<15>) = 1.

13.4 Simple PWM Mode

When control bits OCM<2:0> (OCxCON<2:0>) = 110 or 111, the selected output compare channel is configured for the PWM mode of operation. When configured for the PWM mode of operation, OCxR is the main latch (read only) and OCxRS is the secondary latch. This enables glitchless PWM transitions.

The user must perform the following steps in order to configure the output compare module for PWM operation:

1. Set the PWM period by writing to the appropriate period register.
2. Set the PWM duty cycle by writing to the OCxRS register.
3. Configure the output compare module for PWM operation.
4. Set the TMRx prescale value and enable the Timer, TON (TxCON<15>) = 1.

13.4.1 INPUT PIN FAULT PROTECTION FOR PWM

When control bits OCM<2:0> (OCxCON<2:0>) = 111, the selected output compare channel is again configured for the PWM mode of operation with the additional feature of input Fault protection. While in this mode, if a logic '0' is detected on the OCFA/B pin, the respective PWM output pin is placed in the high-impedance input state. The OCFLT bit (OCxCON<4>) indicates whether a Fault condition has occurred. This state will be maintained until both of the following events have occurred:

- The external Fault condition has been removed.
- The PWM mode has been re-enabled by writing to the appropriate control bits.

© 2011 Microchip Technology Inc.

Downloaded from Arrow.com.

13.4.2 PWM PERIOD

The PWM period is specified by writing to the PRx register. The PWM period can be calculated using Equation 13-1.

EQUATION 13-1:

$$PWM\ period = [(PRx) + 1] \cdot 4 \cdot T_{OSC} \cdot (TMRx\ prescale\ value)$$

PWM frequency is defined as 1/[PWM period].

When the selected TMRx is equal to its respective period register, PRx, the following four events occur on the next increment cycle:

- TMRx is cleared
- The OCx pin is set
  - Exception 1: If PWM duty cycle is 0x0000, the OCx pin will remain low
  - Exception 2: If duty cycle is greater than PRx, the pin will remain high
- The PWM duty cycle is latched from OCxRS into OCxR
- The corresponding timer interrupt flag is set

See Figure 13-2 for key PWM period comparisons. Timer3 is referred to in Figure 13-2 for clarity.

FIGURE 13-2: PWM OUTPUT TIMING

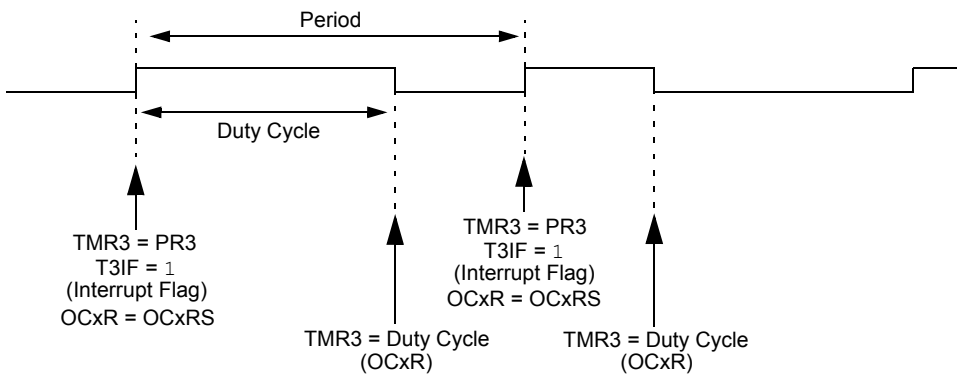

Downloaded from Arrow.com.

13.5 Output Compare Operation During CPU Sleep Mode

When the CPU enters Sleep mode, all internal clocks are stopped. Therefore, when the CPU enters the Sleep state, the output compare channel will drive the pin to the active state that was observed prior to entering the CPU Sleep state.

For example, if the pin was high when the CPU entered the Sleep state, the pin will remain high. Likewise, if the pin was low when the CPU entered the Sleep state, the pin will remain low. In either case, the output compare module will resume operation when the device wakes up.

13.6 Output Compare Operation During CPU Idle Mode

When the CPU enters the Idle mode, the output compare module can operate with full functionality.

The output compare channel will operate during the CPU Idle mode if the OCSIDL bit (OCxCON<13>) is at logic '0' and the selected time base (Timer2 or Timer3) is enabled and the TSIDL bit of the selected timer is set to logic '0'.

13.7 Output Compare Interrupts

The output compare channels have the ability to generate an interrupt on a compare match, for whichever Match mode has been selected.

For all modes except the PWM mode, when a compare event occurs, the respective interrupt flag (OCxIF) is asserted and an interrupt will be generated if enabled. The OCxIF bit is located in the corresponding IFS status register and must be cleared in software. The interrupt is enabled via the respective compare interrupt enable (OCxIE) bit located in the corresponding IEC control register.

For the PWM mode, when an event occurs, the respective timer interrupt flag (T2IF or T3IF) is asserted and an interrupt will be generated if enabled. The IF bit is located in the IFS0 status register and must be cleared in software. The interrupt is enabled via the respective timer interrupt enable bit (T2IE or T3IE) located in the IEC0 control register. The output compare interrupt flag is never set during the PWM mode of operation.

© 2011 Microchip Technology Inc.

Downloaded from Arrow.com.

TABLE 13-1: OUTPUT COMPARE REGISTER MAP(1)

SFR Name	Addr.	Bit 15	Bit 14	Bit 13	Bit 12	Bit 11	Bit 10	Bit 9	Bit 8	Bit 7	Bit 6	Bit 5	Bit 4	Bit 3	Bit 2	Bit 1	Bit 0	Reset State
OC1RS	0180	Output Compare 1 Secondary Register																0000 0000 0000 0000
OC1R	0182	Output Compare 1 Main Register																0000 0000 0000 0000
OC1CON	0184	—	—	OCSIDL	—	—	—	—	—	—	—	—	OCFLT	OCTSEL	OCM<2:0>			0000 0000 0000 0000
OC2RS	0186	Output Compare 2 Secondary Register																0000 0000 0000 0000
OC2R	0188	Output Compare 2 Main Register																0000 0000 0000 0000
OC2CON	018A	—	—	OCSIDL	—	—	—	—	—	—	—	—	OCFLT	OCTSE	OCM<2:0>			0000 0000 0000 0000
OC3RS	018C	Output Compare 3 Secondary Register																0000 0000 0000 0000
OC3R	018E	Output Compare 3 Main Register																0000 0000 0000 0000
OC3CON	0190	—	—	OCSIDL	—	—	—	—	—	—	—	—	OCFLT	OCTSEL	OCM<2:0>			0000 0000 0000 0000
OC4RS	0192	Output Compare 4 Secondary Register																0000 0000 0000 0000
OC4R	0194	Output Compare 4 Main Register																0000 0000 0000 0000
OC4CON	0196	—	—	OCSIDL	—	—	—	—	—	—	—	—	OCFLT	OCTSEL	OCM<2:0>			0000 0000 0000 0000
OC5RS	0198	Output Compare 5 Secondary Register																0000 0000 0000 0000
OC5R	019A	Output Compare 5 Main Register																0000 0000 0000 0000
OC5CON	019C	—	—	OCSIDL	—	—	—	—	—	—	—	—	OCFLT	OCTSEL	OCM<2:0>			0000 0000 0000 0000
OC6RS	019E	Output Compare 6 Secondary Register																0000 0000 0000 0000
OC6R	01A0	Output Compare 6 Main Register																0000 0000 0000 0000
OC6CON	01A2	—	—	OCSIDL	—	—	—	—	—	—	—	—	OCFLT	OCTSEL	OCM<2:0>			0000 0000 0000 0000
OC7RS	01A4	Output Compare 7 Secondary Register																0000 0000 0000 0000
OC7R	01A6	Output Compare 7 Main Register																0000 0000 0000 0000
OC7CON	01A8	—	—	OCSIDL	—	—	—	—	—	—	—	—	OCFLT	OCTSEL	OCM<2:0>			0000 0000 0000 0000
OC8RS	01AA	Output Compare 8 Secondary Register																0000 0000 0000 0000
OC8R	01AC	Output Compare 8 Main Register																0000 0000 0000 0000
OC8CON	01AE	—	—	OCSIDL	—	—	—	—	—	—	—	—	OCFLT	OCTSEL	OCM<2:0>			0000 0000 0000 0000

Legend: u = uninitialized bit; — = unimplemented bit, read as '0'

Note 1: Refer to the *"dsPIC30F Family Reference Manual"* (DS70046) for descriptions of register bit fields.

© 2011 Microchip Technology Inc.

Downloaded from Arrow.com.

NOTES:

© 2011 Microchip Technology Inc.

Downloaded from Arrow.com.

14.0 SPI™ MODULE

Note: This data sheet summarizes features of this group of dsPIC30F devices and is not intended to be a complete reference source. For more information on the CPU, peripherals, register descriptions and general device functionality, refer to the *"dsPIC30F Family Reference Manual"* (DS70046).

The Serial Peripheral Interface (SPI™) module is a synchronous serial interface. It is useful for communicating with other peripheral devices, such as EEPROMs, shift registers, display drivers and A/D converters, or other microcontrollers. It is compatible with Motorola's SPI and SIOP interfaces.

14.1 Operating Function Description

Each SPI module consists of a 16-bit shift register, SPIxSR (where x = 1 or 2), used for shifting data in and out, and a buffer register, SPIxBUF. A control register, SPIxCON, configures the module. Additionally, a status register, SPIxSTAT, indicates various status conditions.

The serial interface consists of 4 pins: SDIx (serial data input), SDOx (serial data output), SCKx (shift clock input or output), and $\overline{\text{SSx}}$ (active-low slave select).

In Master mode operation, SCK is a clock output but in Slave mode, it is a clock input.

A series of eight (8) or sixteen (16) clock pulses shift out bits from the SPIxSR to SDOx pin and simultaneously shift in data from SDIx pin. An interrupt is generated when the transfer is complete and the corresponding interrupt flag bit (SPI1IF or SPI2IF) is set. This interrupt can be disabled through an interrupt enable bit (SPI1IE or SPI2IE).

The receive operation is double-buffered. When a complete byte is received, it is transferred from SPIxSR to SPIxBUF.

If the receive buffer is full when new data is being transferred from SPIxSR to SPIxBUF, the module will set the SPIROV bit indicating an overflow condition. The transfer of the data from SPIxSR to SPIxBUF will not be completed and the new data will be lost. The module will not respond to SCL transitions while SPIROV is '1', effectively disabling the module until SPIxBUF is read by user software.

Transmit writes are also double-buffered. The user writes to SPIxBUF. When the master or slave transfer is completed, the contents of the shift register (SPIxSR) are moved to the receive buffer. If any transmit data has been written to the buffer register, the contents of the transmit buffer are moved to SPIxSR. The received data is thus placed in SPIxBUF and the transmit data in SPIxSR is ready for the next transfer.

Note: Both the transmit buffer (SPIxTXB) and the receive buffer (SPIxRXB) are mapped to the same register address, SPIxBUF.

In Master mode, the clock is generated by prescaling the system clock. Data is transmitted as soon as a value is written to SPIxBUF. The interrupt is generated at the middle of the transfer of the last bit.

In Slave mode, data is transmitted and received as external clock pulses appear on SCK. Again, the interrupt is generated when the last bit is latched. If $\overline{\text{SSx}}$ control is enabled, then transmission and reception are enabled only when $\overline{\text{SSx}}$ = low. The SDOx output will be disabled in $\overline{\text{SSx}}$ mode with $\overline{\text{SSx}}$ high.

The clock provided to the module is (FOSC/4). This clock is then prescaled by the primary (PPRE<1:0>) and the secondary (SPRE<2:0>) prescale factors. The CKE bit determines whether transmit occurs on transition from active clock state to Idle clock state, or vice versa. The CKP bit selects the Idle state (high or low) for the clock.

14.1.1 WORD AND BYTE COMMUNICATION

A control bit, MODE16 (SPIxCON<10>), allows the module to communicate in either 16-bit or 8-bit mode. 16-bit operation is identical to 8-bit operation except that the number of bits transmitted is 16 instead of 8.

The user software must disable the module prior to changing the MODE16 bit. The SPI module is reset when the MODE16 bit is changed by the user.

A basic difference between 8-bit and 16-bit operation is that the data is transmitted out of bit 7 of the SPIxSR for 8-bit operation, and data is transmitted out of bit15 of the SPIxSR for 16-bit operation. In both modes, data is shifted into bit 0 of the SPIxSR.

14.1.2 SDOx DISABLE

A control bit, DISSDO, is provided to the SPIxCON register to allow the SDOx output to be disabled. This will allow the SPI module to be connected in an input only configuration. SDO can also be used for general purpose I/O.

Downloaded from Arrow.com.

14.2 Framed SPI Support

The module supports a basic framed SPI protocol in Master or Slave mode. The control bit FRMEN enables framed SPI support and causes the $\overline{SSx}$ pin to perform the frame synchronization pulse (FSYNC) function. The control bit SPIFSD determines whether the $\overline{SSx}$ pin is an input or an output (i.e., whether the module receives or generates the frame synchronization pulse). The frame pulse is an active-high pulse for a single SPI clock cycle. When frame synchronization is enabled, the data transmission starts only on the subsequent transmit edge of the SPI clock.

FIGURE 14-1: SPI BLOCK DIAGRAM

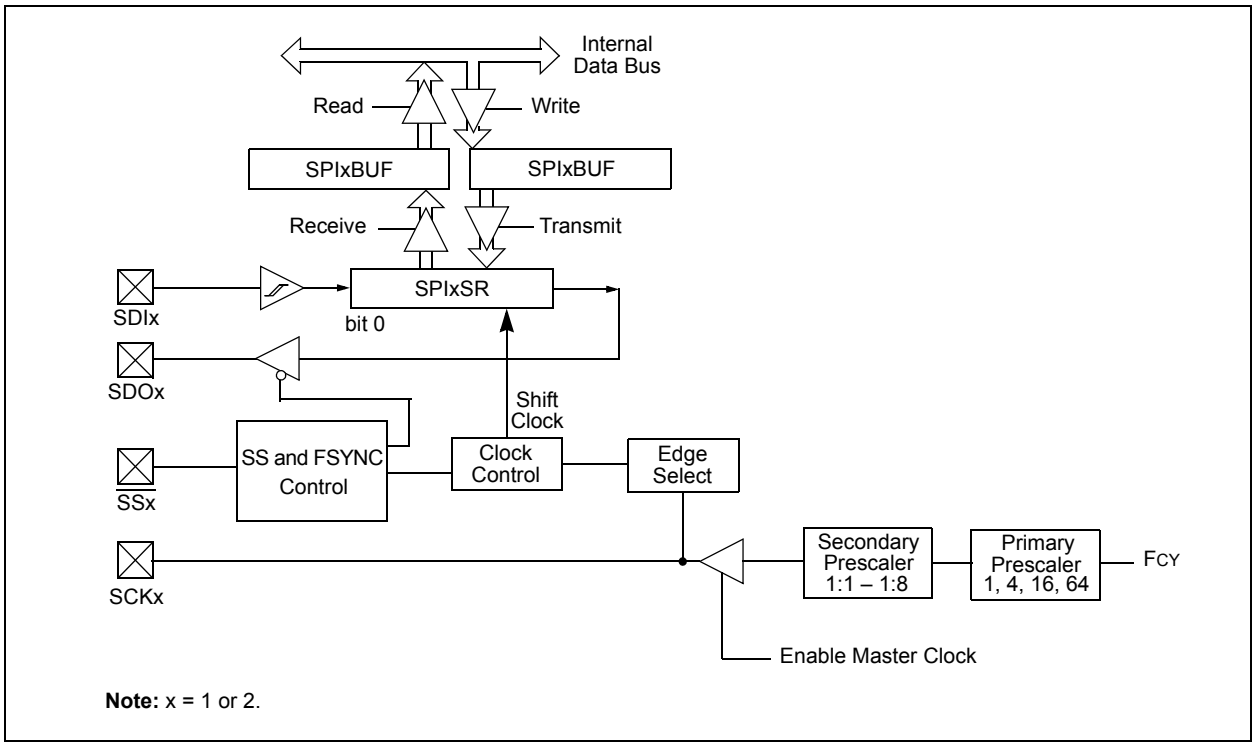

FIGURE 14-2: SPI MASTER/SLAVE CONNECTION

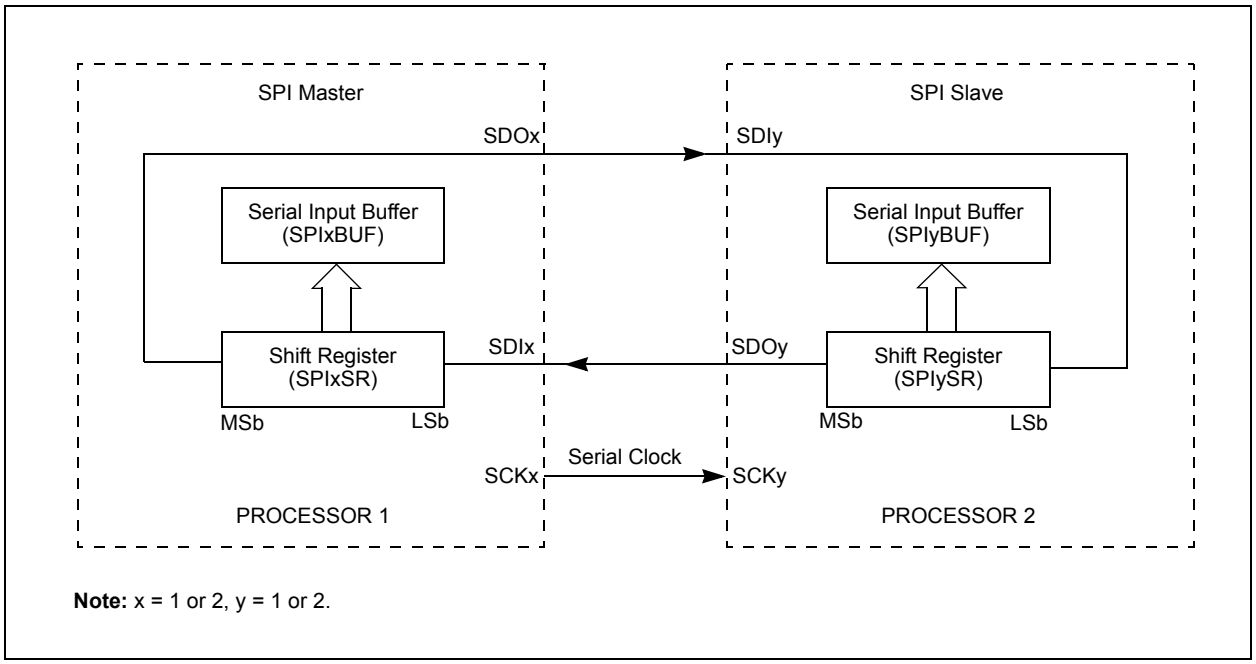

© 2011 Microchip Technology Inc.

Downloaded from Arrow.com.

14.3 Slave Select Synchronization

The $\overline{SSx}$ pin allows a Synchronous Slave mode. The SPI must be configured in SPI Slave mode with $\overline{SSx}$ pin control enabled (SSEN = 1). When the $\overline{SSx}$ pin is low, transmission and reception are enabled and the SDOx pin is driven. When $\overline{SSx}$ pin goes high, the SDOx pin is no longer driven. Also, the SPI module is re-synchronized, and all counters/control circuitry are reset. Therefore, when the $\overline{SSx}$ pin is asserted low again, transmission/reception will begin at the MSb even if $\overline{SSx}$ had been deasserted in the middle of a transmit/receive.

14.4 SPI Operation During CPU Sleep Mode

During Sleep mode, the SPI module is shutdown. If the CPU enters Sleep mode while an SPI transaction is in progress, then the transmission and reception is aborted.

The transmitter and receiver will stop in Sleep mode. However, register contents are not affected by entering or exiting Sleep mode.

14.5 SPI Operation During CPU Idle Mode

When the device enters Idle mode, all clock sources remain functional. The SPISIDL bit (SPIxSTAT<13>) selects if the SPI module will stop or continue on Idle. If SPISIDL = 0, the module will continue to operate when the CPU enters Idle mode. If SPISIDL = 1, the module will stop when the CPU enters Idle mode.

Downloaded from Arrow.com.

TABLE 14-1: SPI1 REGISTER MAP(1)

SFR Name	Addr.	Bit 15	Bit 14	Bit 13	Bit 12	Bit 11	Bit 10	Bit 9	Bit 8	Bit 7	Bit 6	Bit 5	Bit 4	Bit 3	Bit 2	Bit 1	Bit 0	Reset State
SPI1STAT	0220	SPIEN	—	SPISIDL	—	—	—	—	—	—	SPIROV	—	—	—	—	SPITBF	SPIRBF	0000 0000 0000 0000
SPI1CON	0222	—	FRMEN	SPIFSD	—	DISSDO	MODE16	SMP	CKE	SSEN	CKP	MSTEN	SPRE2	SPRE1	SPRE0	PPRE1	PPRE0	0000 0000 0000 0000
SPI1BUF	0224	Transmit and Receive Buffer																0000 0000 0000 0000

Legend: — = unimplemented bit, read as '0'
Note 1: Refer to the *"dsPIC30F Family Reference Manual"* (DS70046) for descriptions of register bit fields.

TABLE 14-2: SPI2 REGISTER MAP(1)

SFR Name	Addr.	Bit 15	Bit 14	Bit 13	Bit 12	Bit 11	Bit 10	Bit 9	Bit 8	Bit 7	Bit 6	Bit 5	Bit 4	Bit 3	Bit 2	Bit 1	Bit 0	Reset State
SPI2STAT	0226	SPIEN	—	SPISIDL	—	—	—	—	—	—	SPIROV	—	—	—	—	SPITBF	SPIRBF	0000 0000 0000 0000
SPI2CON	0228	—	FRMEN	SPIFSD	—	DISSDO	MODE16	SMP	CKE	SSEN	CKP	MSTEN	SPRE2	SPRE1	SPRE0	PPRE1	PPRE0	0000 0000 0000 0000
SPI2BUF	022A	Transmit and Receive Buffer																0000 0000 0000 0000

Legend: — = unimplemented bit, read as '0'
Note 1: Refer to the *"dsPIC30F Family Reference Manual"* (DS70046) for descriptions of register bit fields.

© 2011 Microchip Technology Inc.
Downloaded from Arrow.com.

15.0 I²C™ MODULE

Note: This data sheet summarizes features of this group of dsPIC30F devices and is not intended to be a complete reference source. For more information on the CPU, peripherals, register descriptions and general device functionality, refer to the "*dsPIC30F Family Reference Manual*" (DS70046).

The Inter-Integrated Circuit (I²C™) module provides complete hardware support for both Slave and Multi-Master modes of the I²C serial communication standard, with a 16-bit interface.

This module offers the following key features:

- I²C interface supporting both master and slave operation
- I²C Slave mode supports 7-bit and 10-bit addressing
- I²C Master mode supports 7-bit and 10-bit addressing
- I²C port allows bidirectional transfers between master and slaves
- Serial clock synchronization for I²C port can be used as a handshake mechanism to suspend and resume serial transfer (SCLREL control)
- I²C supports multi-master operation, detects bus collision and will arbitrate accordingly

15.1 Operating Function Description

The hardware fully implements all the master and slave functions of the I²C Standard and Fast mode specifications, as well as 7 and 10-bit addressing.

Thus, the I²C module can operate either as a slave or a master on an I²C bus.

15.1.1 VARIOUS I²C MODES

The following types of I²C operation are supported:

- I²C slave operation with 7-bit addressing
- I²C slave operation with 10-bit addressing
- I²C master operation with 7-bit or 10-bit addressing

See the I²C programmer's model in Figure 15-1.

15.1.2 PIN CONFIGURATION IN I²C MODE

I²C has a 2-pin interface: the SCL pin is clock and the SDA pin is data.

15.1.3 I²C REGISTERS

I2CCON and I2CSTAT are control and status registers, respectively. The I2CCON register is readable and writable. The lower 6 bits of I2CSTAT are read only. The remaining bits of the I2CSTAT are read/write.

I2CRSR is the shift register used for shifting data, whereas I2CRCV is the buffer register to which data bytes are written, or from which data bytes are read. I2CRCV is the receive buffer as shown in Figure 15-1. I2CTRN is the transmit register to which bytes are written during a transmit operation, as shown in Figure 15-2.

The I2CADD register holds the slave address. A status bit, ADD10, indicates 10-bit Address mode. The I2CBRG acts as the Baud Rate Generator (BRG) reload value.

In receive operations, I2CRSR and I2CRCV together form a double-buffered receiver. When I2CRSR receives a complete byte, it is transferred to I2CRCV and an interrupt pulse is generated. During transmission, the I2CTRN is not double-buffered.

Note: Following a Restart condition in 10-bit mode, the user only needs to match the first 7-bit address.

FIGURE 15-1: PROGRAMMER'S MODEL

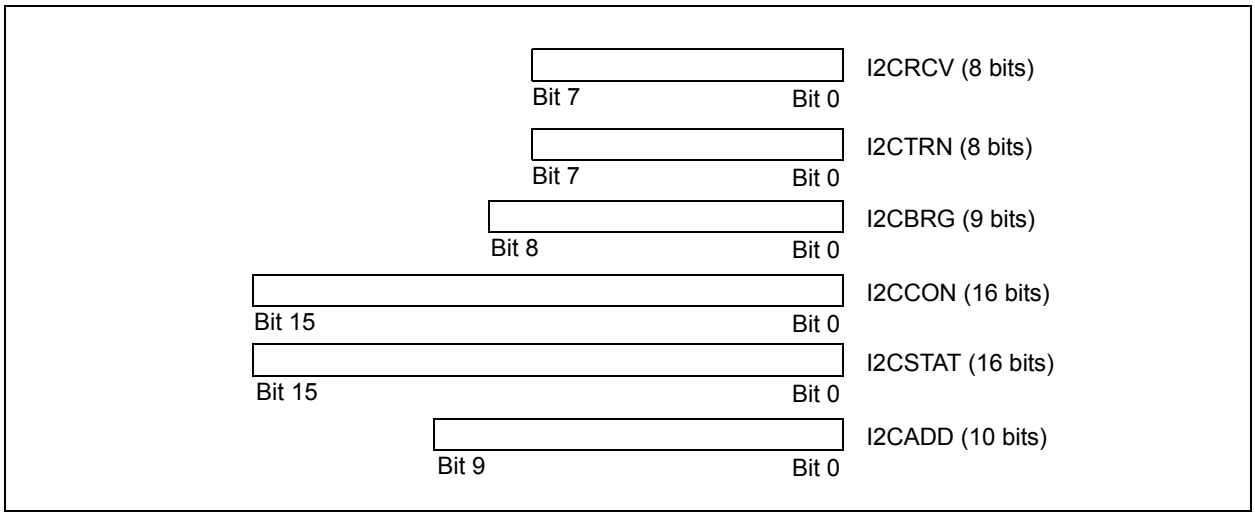

Downloaded from Arrow.com.

FIGURE 15-2: I²C™ BLOCK DIAGRAM

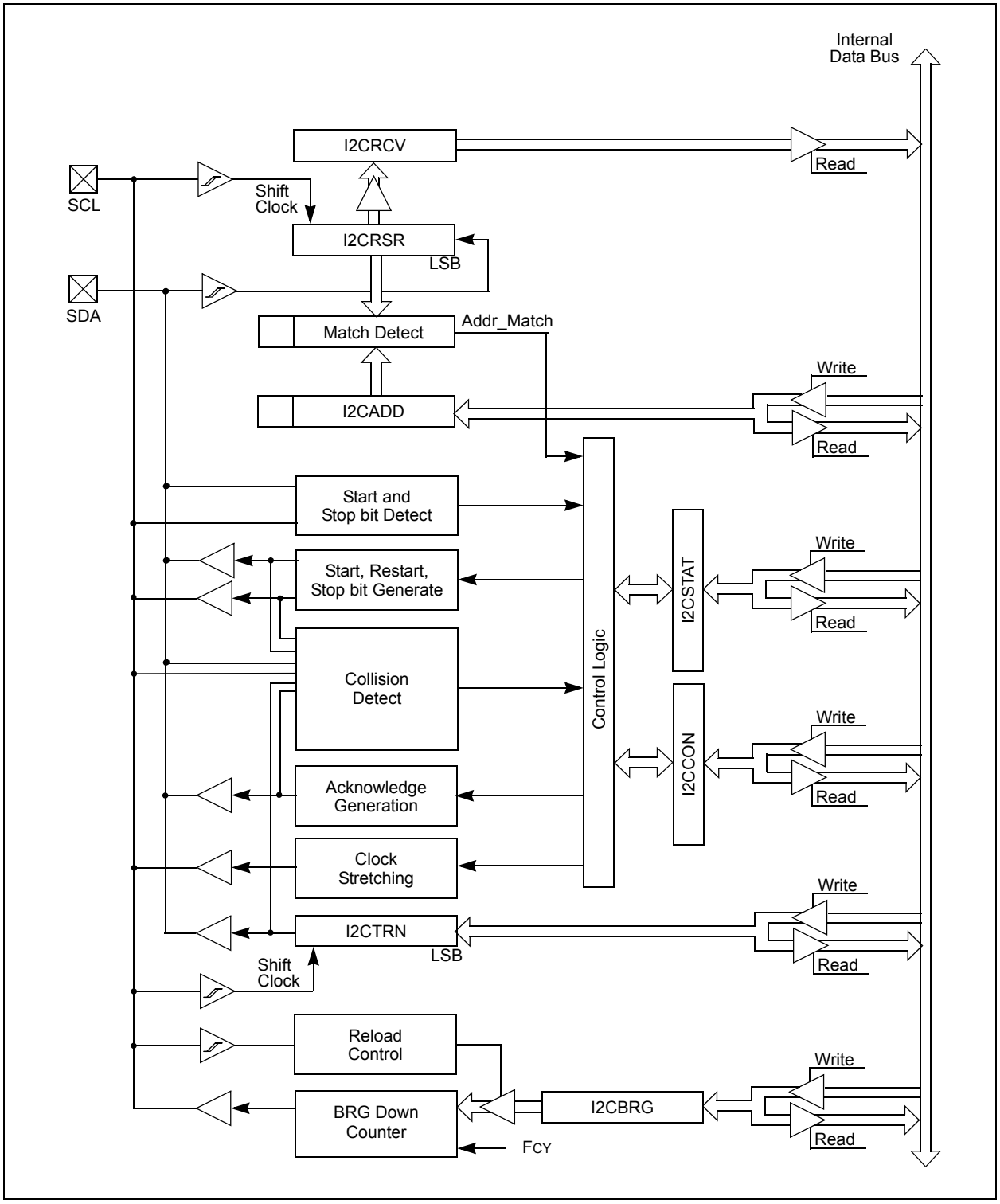

© 2011 Microchip Technology Inc.

Downloaded from Arrow.com.

15.2 I²C Module Addresses

The I2CADD register contains the Slave mode addresses. The register is a 10-bit register.

If the A10M bit (I2CCON<10>) is '0', the address is interpreted by the module as a 7-bit address. When an address is received, it is compared to the 7 Least Significant bits of the I2CADD register.

If the A10M bit is '1', the address is assumed to be a 10-bit address. When an address is received, it will be compared with the binary value '11110 A9 A8' (where A9 and A8 are two Most Significant bits of I2CADD). If that value matches, the next address will be compared with the Least Significant 8 bits of I2CADD, as specified in the 10-bit addressing protocol.

TABLE 15-1: 7-BIT I²C™ SLAVE ADDRESSES SUPPORTED BY DSPIC30F

Address	Description
0x00	General call address or start byte
0x01-0x03	Reserved
0x04-0x07	HS mode Master codes
0x08-0x77	Valid 7-bit addresses
0x78-0x7b	Valid 10-bit addresses (lower 7 bits)
0x7c-0x7f	Reserved

15.3 I²C 7-bit Slave Mode Operation

Once enabled (I2CEN = 1), the slave module will wait for a Start bit to occur (i.e., the I²C module is 'Idle'). Following the detection of a Start bit, 8 bits are shifted into I2CRSR and the address is compared against I2CADD. In 7-bit mode (A10M = 0), bits I2CADD<6:0> are compared against I2CRSR<7:1> and I2CRSR<0> is the R_W bit. All incoming bits are sampled on the rising edge of SCL.

If an address match occurs, an Acknowledgement will be sent, and the slave event interrupt flag (SI2CIF) is set on the falling edge of the ninth ($\overline{ACK}$) bit. The address value is loaded into the I2CRCV buffer, and the RBF bit is set.

15.3.1 SLAVE TRANSMISSION

If the R_W bit received is a '1', then the serial port will go into Transmit mode. It will send $\overline{ACK}$ on the ninth bit and then hold SCL to '0' until the CPU responds by writing to I2CTRN. SCL is released by setting the SCLREL bit, and 8 bits of data are shifted out. Data bits are shifted out on the falling edge of SCL, such that SDA is valid during SCL high. The interrupt pulse is sent on the falling edge of the ninth clock pulse, regardless of the status of the $\overline{ACK}$ received from the master.

15.3.2 SLAVE RECEPTION

If the R_W bit received is a '0' during an address match, then Receive mode is initiated. Incoming bits are sampled on the rising edge of SCL. After 8 bits are received, if I2CRCV is not full or $\overline{I2COV}$ is not set, I2CRSR is transferred to I2CRCV. $\overline{ACK}$ is sent on the ninth clock.

If the RBF flag is set, indicating that I2CRCV is still holding data from a previous operation (RBF = 1), then $\overline{ACK}$ is not sent; however, the interrupt pulse is generated. In the case of an overflow, the contents of the I2CRSR are not loaded into the I2CRCV.

> **Note:** The I2CRCV will be loaded if the I2COV bit = 1 and the RBF flag = 0. In this case, a read of the I2CRCV was performed but the user did not clear the state of the I2COV bit before the next receive occurred. The Acknowledgement is not sent ($\overline{ACK}$ = 1) and the I2CRCV is updated.

15.4 I²C 10-bit Slave Mode Operation

In 10-bit mode, the basic receive and transmit operations are the same as in the 7-bit mode. However, the criteria for address match is more complex.

The I²C specification dictates that a slave must be addressed for a write operation with two address bytes following a Start bit.

The A10M bit is a control bit that signifies that the address in I2CADD is a 10-bit address rather than a 7-bit address. The address detection protocol for the first byte of a message address is identical for 7-bit and 10-bit messages, but the bits being compared are different.

I2CADD holds the entire 10-bit address. Upon receiving an address following a Start bit, I2CRSR <7:3> is compared against a literal '11110' (the default 10-bit address) and I2CRSR<2:1> are compared against I2CADD<9:8>. If a match occurs and if R_W = 0, the interrupt pulse is sent. The ADD10 bit will be cleared to indicate a partial address match. If a match fails or R_W = 1, the ADD10 bit is cleared and the module returns to the Idle state.

The low byte of the address is then received and compared with I2CADD<7:0>. If an address match occurs, the interrupt pulse is generated and the ADD10 bit is set, indicating a complete 10-bit address match. If an address match did not occur, the ADD10 bit is cleared and the module returns to the Idle state.

Downloaded from Arrow.com.

15.4.1 10-BIT MODE SLAVE TRANSMISSION

Once a slave is addressed in this fashion with the full 10-bit address (we will refer to this state as “PRIOR_ADDR_MATCH”), the master can begin sending data bytes for a slave reception operation.

15.4.2 10-BIT MODE SLAVE RECEPTION

Once addressed, the master can generate a Repeated Start, reset the high byte of the address and set the R_W bit without generating a Stop bit, thus initiating a slave transmit operation.

15.5 Automatic Clock Stretch

In the Slave modes, the module can synchronize buffer reads and write to the master device by clock stretching.

15.5.1 TRANSMIT CLOCK STRETCHING

Both 10-bit and 7-bit Transmit modes implement clock stretching by asserting the SCLREL bit after the falling edge of the ninth clock, if the TBF bit is cleared, indicating the buffer is empty.

In Slave Transmit modes, clock stretching is always performed irrespective of the STREN bit.

Clock synchronization takes place following the ninth clock of the transmit sequence. If the device samples an $\overline{\text{ACK}}$ on the falling edge of the ninth clock and if the TBF bit is still clear, then the SCLREL bit is automatically cleared. The SCLREL being cleared to ‘0’ will assert the SCL line low. The user’s ISR must set the SCLREL bit before transmission is allowed to continue. By holding the SCL line low, the user has time to service the ISR and load the contents of the I2CTRN before the master device can initiate another transmit sequence.

Note 1:	If the user loads the contents of I2CTRN, setting the TBF bit before the falling edge of the ninth clock, the SCLREL bit will not be cleared and clock stretching will not occur.
2:	The SCLREL bit can be set in software, regardless of the state of the TBF bit.

15.5.2 RECEIVE CLOCK STRETCHING

The STREN bit in the I2CCON register can be used to enable clock stretching in Slave Receive mode. When the STREN bit is set, the SCL pin will be held low at the end of each data receive sequence.

15.5.3 CLOCK STRETCHING DURING 7-BIT ADDRESSING (STREN = 1)

When the STREN bit is set in Slave Receive mode, the SCL line is held low when the buffer register is full. The method for stretching the SCL output is the same for both 7 and 10-bit Addressing modes.

Clock stretching takes place following the ninth clock of the receive sequence. On the falling edge of the ninth clock at the end of the ACK sequence, if the RBF bit is set, the SCLREL bit is automatically cleared, forcing the SCL output to be held low. The user’s ISR must set the SCLREL bit before reception is allowed to continue. By holding the SCL line low, the user has time to service the ISR and read the contents of the I^2CRCV before the master device can initiate another receive sequence. This will prevent buffer overruns from occurring.

Note 1:	If the user reads the contents of the I2CRCV, clearing the RBF bit before the falling edge of the ninth clock, the SCLREL bit will not be cleared and clock stretching will not occur.
2:	The SCLREL bit can be set in software regardless of the state of the RBF bit. The user should be careful to clear the RBF bit in the ISR before the next receive sequence in order to prevent an overflow condition.

15.5.4 CLOCK STRETCHING DURING 10-BIT ADDRESSING (STREN = 1)

Clock stretching takes place automatically during the addressing sequence. Because this module has a register for the entire address, it is not necessary for the protocol to wait for the address to be updated.

After the address phase is complete, clock stretching will occur on each data receive or transmit sequence as was described earlier.

15.6 Software Controlled Clock Stretching (STREN = 1)

When the STREN bit is ‘1’, the SCLREL bit may be cleared by software to allow software to control the clock stretching. The logic will synchronize writes to the SCLREL bit with the SCL clock. Clearing the SCLREL bit will not assert the SCL output until the module detects a falling edge on the SCL output and SCL is sampled low. If the SCLREL bit is cleared by the user while the SCL line has been sampled low, the SCL output will be asserted (held low). The SCL output will remain low until the SCLREL bit is set, and all other devices on the I^2C bus have deasserted SCL. This ensures that a write to the SCLREL bit will not violate the minimum high time requirement for SCL.

If the STREN bit is ‘0’, a software write to the SCLREL bit will be disregarded and have no effect on the SCLREL bit.

© 2011 Microchip Technology Inc.

Downloaded from Arrow.com.

15.7 Interrupts

The I^{2}C module generates two interrupt flags, MI2CIF (I^{2}C Master Interrupt Flag) and SI2CIF (I^{2}C Slave Interrupt Flag). The MI2CIF interrupt flag is activated on completion of a master message event. The SI2CIF interrupt flag is activated on detection of a message directed to the slave.

15.8 Slope Control

The I^{2}C standard requires slope control on the SDA and SCL signals for Fast mode (400 kHz). The control bit, DISSLW, enables the user to disable slew rate control if desired. It is necessary to disable the slew rate control for 1 MHz mode.

15.9 IPMI Support

The control bit, IPMIEN, enables the module to support Intelligent Peripheral Management Interface (IPMI). When this bit is set, the module accepts and acts upon all addresses.

15.10 General Call Address Support

The general call address can address all devices. When this address is used, all devices should, in theory, respond with an Acknowledgement.

The general call address is one of eight addresses reserved for specific purposes by the I^{2}C protocol. It consists of all '0's with R_W = 0.

The general call address is recognized when the General Call Enable (GCEN) bit is set (I2CCON<7> = 1). Following a Start bit detection, 8 bits are shifted into I2CRSR and the address is compared with I2CADD, and is also compared with the general call address which is fixed in hardware.

If a general call address match occurs, the I2CRSR is transferred to the I2CRCV after the eighth clock, the RBF flag is set and on the falling edge of the ninth bit ($\overline{\text{ACK}}$ bit), the master event interrupt flag (MI2CIF) is set.

When the interrupt is serviced, the source for the interrupt can be checked by reading the contents of the I2CRCV to determine if the address was device specific or a general call address.

15.11 I^{2}C Master Support

As a master device, six operations are supported:

- Assert a Start condition on SDA and SCL.
- Assert a Restart condition on SDA and SCL.
- Write to the I2CTRN register initiating transmission of data/address.
- Generate a Stop condition on SDA and SCL.
- Configure the I^{2}C port to receive data.
- Generate an $\overline{\text{ACK}}$ condition at the end of a received byte of data.

15.12 I^{2}C Master Operation

The master device generates all of the serial clock pulses and the Start and Stop conditions. A transfer is ended with a Stop condition or with a Repeated Start condition. Since the Repeated Start condition is also the beginning of the next serial transfer, the I^{2}C bus will not be released.

In Master Transmitter mode, serial data is output through SDA, while SCL outputs the serial clock. The first byte transmitted contains the slave address of the receiving device (7 bits) and the data direction bit. In this case, the data direction bit (R_W) is logic '0'. Serial data is transmitted 8 bits at a time. After each byte is transmitted, an $\overline{\text{ACK}}$ bit is received. Start and Stop conditions are output to indicate the beginning and the end of a serial transfer.

In Master Receive mode, the first byte transmitted contains the slave address of the transmitting device (7 bits) and the data direction bit. In this case, the data direction bit (R_W) is logic '1'. Thus, the first byte transmitted is a 7-bit slave address, followed by a '1' to indicate receive bit. Serial data is received via SDA while SCL outputs the serial clock. Serial data is received 8 bits at a time. After each byte is received, an $\overline{\text{ACK}}$ bit is transmitted. Start and Stop conditions indicate the beginning and end of transmission.

15.12.1 I^{2}C MASTER TRANSMISSION

Transmission of a data byte, a 7-bit address, or the second half of a 10-bit address is accomplished by simply writing a value to the I2CTRN register. The user should only write to I2CTRN when the module is in a Wait state. This action will set the Buffer Full Flag (TBF) and allow the Baud Rate Generator to begin counting and start the next transmission. Each bit of address/data will be shifted out onto the SDA pin after the falling edge of SCL is asserted. The Transmit Status Flag, TRSTAT (I2CSTAT<14>), indicates that a master transmit is in progress.

15.12.2 I^{2}C MASTER RECEPTION

Master mode reception is enabled by programming the Receive Enable bit, RCEN (I2CCON<3>). The I^{2}C module must be Idle before the RCEN bit is set, otherwise the RCEN bit will be disregarded. The Baud Rate Generator begins counting and, on each rollover, the state of the SCL pin $\overline{\text{ACK}}$ and data are shifted into the I2CRSR on the rising edge of each clock.

Downloaded from Arrow.com.

15.12.3 BAUD RATE GENERATOR

In I²C Master mode, the reload value for the BRG is located in the I2CBRG register. When the BRG is loaded with this value, the BRG counts down to '0' and stops until another reload has taken place. If clock arbitration is taking place, for instance, the BRG is reloaded when the SCL pin is sampled high.

As per the I²C standard, FSCK may be 100 kHz or 400 kHz. However, the user can specify any baud rate up to 1 MHz. I2CBRG values of '0' or '1' are illegal.

EQUATION 15-1: SERIAL CLOCK RATE

$$I2CBRG = \left(\frac{FCY}{FSCK} - \frac{FCY}{1{,}111{,}111} \right) - 1$$

15.12.4 CLOCK ARBITRATION

Clock arbitration occurs when the master deasserts the SCL pin (SCL allowed to float high) during any receive, transmit, or Restart/Stop condition. When the SCL pin is allowed to float high, the Baud Rate Generator is suspended from counting until the SCL pin is actually sampled high. When the SCL pin is sampled high, the Baud Rate Generator is reloaded with the contents of I2CBRG and begins counting. This ensures that the SCL high time will always be at least one BRG rollover count in the event that the clock is held low by an external device.

15.12.5 MULTI-MASTER COMMUNICATION, BUS COLLISION AND BUS ARBITRATION

Multi-master operation support is achieved by bus arbitration. When the master outputs address/data bits onto the SDA pin, arbitration takes place when the master outputs a '1' on SDA by letting SDA float high while another master asserts a '0'. When the SCL pin floats high, data should be stable. If the expected data on SDA is a '1' and the data sampled on the SDA pin = 0, then a bus collision has taken place. The master will set the MI2CIF pulse and reset the master portion of the I²C port to its Idle state.

If a transmit was in progress when the bus collision occurred, the transmission is halted, the TBF flag is cleared, the SDA and SCL lines are deasserted and a value can now be written to I2CTRN. When the user services the I²C master event Interrupt Service Routine, if the I²C bus is free (i.e., the P bit is set), the user can resume communication by asserting a Start condition.

If a Start, Restart, Stop or Acknowledge condition was in progress when the bus collision occurred, the condition is aborted, the SDA and SCL lines are deasserted, and the respective control bits in the I2CCON register are cleared to '0'. When the user services the bus collision Interrupt Service Routine, and if the I²C bus is free, the user can resume communication by asserting a Start condition.

The master will continue to monitor the SDA and SCL pins, and if a Stop condition occurs, the MI2CIF bit will be set.

A write to the I2CTRN will start the transmission of data at the first data bit regardless of where the transmitter left off when bus collision occurred.

In a multi-master environment, the interrupt generation on the detection of Start and Stop conditions allows the determination of when the bus is free. Control of the I²C bus can be taken when the P bit is set in the I2CSTAT register, or the bus is Idle and the S and P bits are cleared.

15.13 I²C Module Operation During CPU Sleep and Idle Modes

15.13.1 I²C OPERATION DURING CPU SLEEP MODE

When the device enters Sleep mode, all clock sources to the module are shutdown and stay at logic '0'. If Sleep occurs in the middle of a transmission and the state machine is partially into a transmission as the clocks stop, then the transmission is aborted. Similarly, if Sleep occurs in the middle of a reception, then the reception is aborted.

15.13.2 I²C OPERATION DURING CPU IDLE MODE

For the I²C, the I2CSIDL bit selects if the module will stop on Idle or continue on Idle. If I2CSIDL = 0, the module will continue operation on assertion of the Idle mode. If I2CSIDL = 1, the module will stop on Idle.

© 2011 Microchip Technology Inc.

Downloaded from Arrow.com.

TABLE 15-2: I²C™ REGISTER MAP(1)

SFR Name	Addr.	Bit 15	Bit 14	Bit 13	Bit 12	Bit 11	Bit 10	Bit 9	Bit 8	Bit 7	Bit 6	Bit 5	Bit 4	Bit 3	Bit 2	Bit 1	Bit 0	Reset State
I2CRCV	0200	—	—	—	—	—	—	—	—	Receive Register								0000 0000 0000 0000
I2CTRN	0202	—	—	—	—	—	—	—	—	Transmit Register								0000 0000 1111 1111
I2CBRG	0204	—	—	—	—	—	—	—	Baud Rate Generator									0000 0000 0000 0000
I2CCON	0206	I2CEN	—	I2CSIDL	SCLREL	IPMIEN	A10M	DISSLW	SMEN	GCEN	STREN	ACKDT	ACKEN	RCEN	PEN	RSEN	SEN	0001 0000 0000 0000
I2CSTAT	0208	ACKSTAT	TRSTAT	—	—	—	BCL	GCSTAT	ADD10	IWCOL	I2COV	D_A	P	S	R_W	RBF	TBF	0000 0000 0000 0000
I2CADD	020A	—	—	—	—	—	—	Address Register										0000 0000 0000 0000

Legend: — = unimplemented bit, read as '0'

Note 1: Refer to the *"dsPIC30F Family Reference Manual"* (DS70046) for descriptions of register bit fields.

Downloaded from Arrow.com.

NOTES:

© 2011 Microchip Technology Inc.

Downloaded from Arrow.com.

16.0 UNIVERSAL ASYNCHRONOUS RECEIVER TRANSMITTER (UART) MODULE

Note: This data sheet summarizes features of this group of dsPIC30F devices and is not intended to be a complete reference source. For more information on the CPU, peripherals, register descriptions and general device functionality, refer to the "*dsPIC30F Family Reference Manual*" (DS70046).

This section describes the Universal Asynchronous Receiver Transmitter communications module.

16.1 UART Module Overview

The key features of the UART module are:

- Full-duplex, 8 or 9-bit data communication
- Even, odd or no parity options (for 8-bit data)
- One or two Stop bits
- Fully integrated Baud Rate Generator with 16-bit prescaler
- Baud rates range from 38 bps to 1.875 Mbps at a 30 MHz instruction rate
- 4-word deep transmit data buffer
- 4-word deep receive data buffer
- Parity, framing and buffer overrun error detection
- Support for interrupt only on address detect (9th bit = 1)
- Separate transmit and receive interrupts
- Loopback mode for diagnostic support

FIGURE 16-1: UART TRANSMITTER BLOCK DIAGRAM

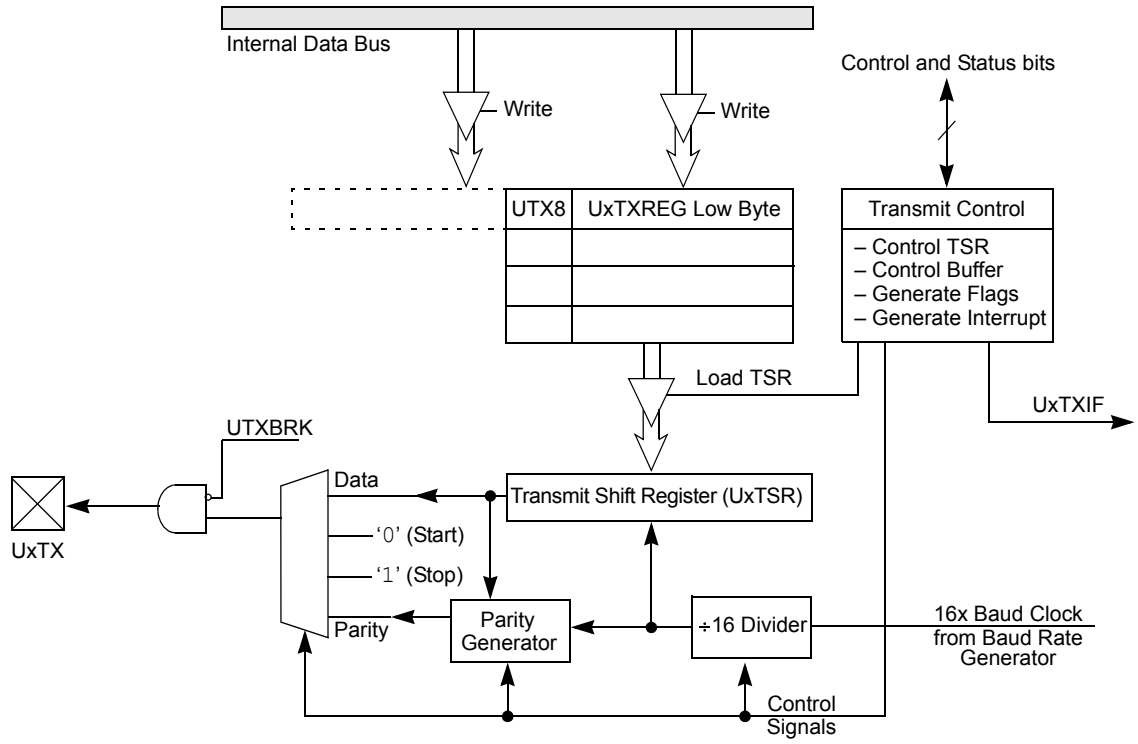

Note: x = 1 or 2.

Downloaded from Arrow.com.

FIGURE 16-2: UART RECEIVER BLOCK DIAGRAM

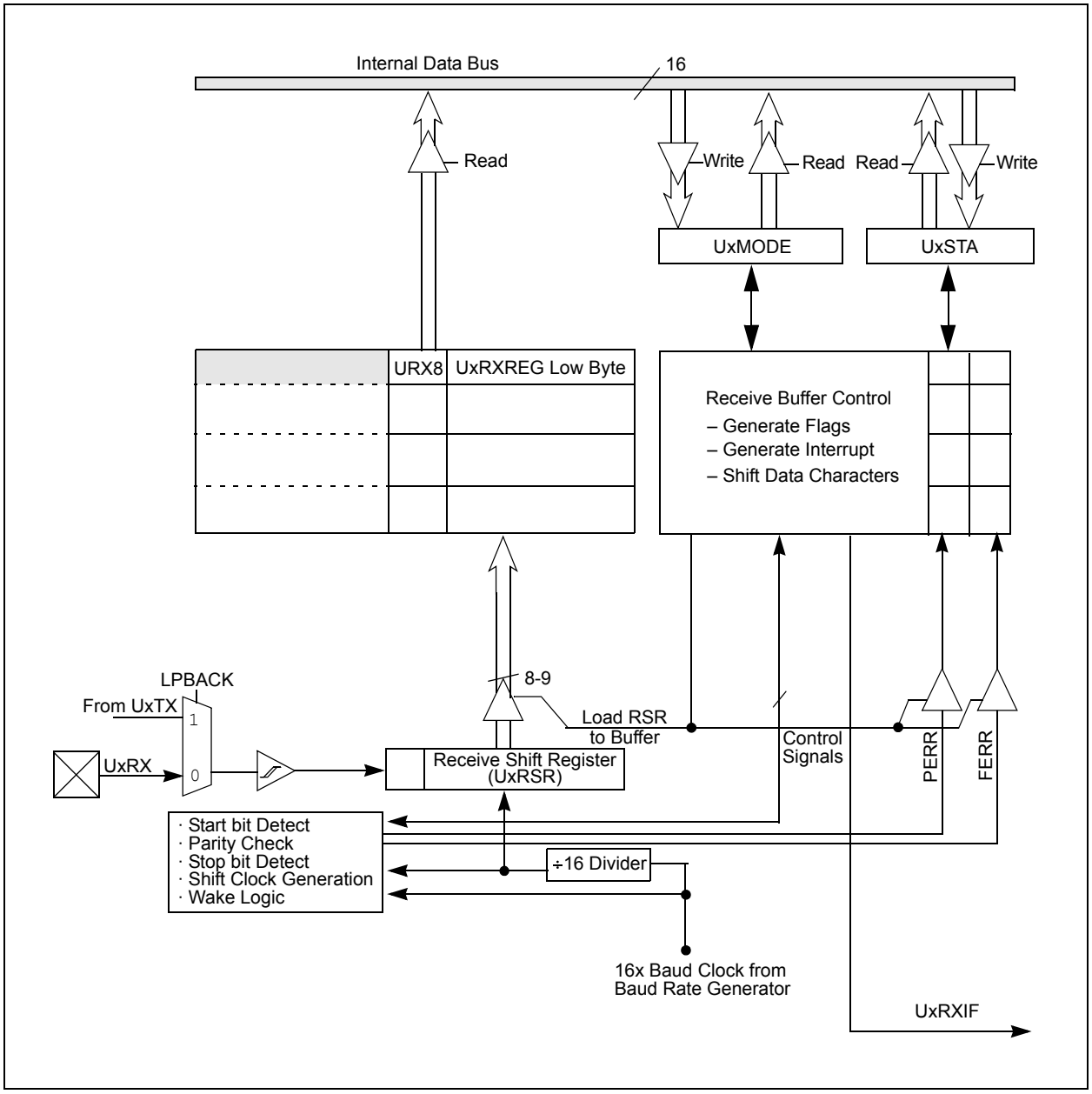

© 2011 Microchip Technology Inc.

Downloaded from Arrow.com.

16.2 Enabling and Setting Up UART

16.2.1 ENABLING THE UART

The UART module is enabled by setting the UARTEN bit in the UxMODE register (where x = 1 or 2). Once enabled, the UxTX and UxRX pins are configured as an output and an input respectively, overriding the TRIS and LATCH register bit settings for the corresponding I/O port pins. The UxTX pin is at logic '1' when no transmission is taking place.

16.2.2 DISABLING THE UART

The UART module is disabled by clearing the UARTEN bit in the UxMODE register. This is the default state after any Reset. If the UART is disabled, all I/O pins operate as port pins under the control of the latch and TRIS bits of the corresponding port pins.

Disabling the UART module resets the buffers to empty states. Any data characters in the buffers are lost and the baud rate counter is reset.

All error and status flags associated with the UART module are reset when the module is disabled. The URXDA, OERR, FERR, PERR, UTXEN, UTXBRK and UTXBF bits are cleared, whereas RIDLE and TRMT are set. Other control bits, including ADDEN, URXISEL<1:0>, UTXISEL, as well as the UxMODE and UxBRG registers, are not affected.

Clearing the UARTEN bit while the UART is active will abort all pending transmissions and receptions and reset the module as defined above. Re-enabling the UART will restart the UART in the same configuration.

16.2.3 SETTING UP DATA, PARITY AND STOP BIT SELECTIONS

Control bits PDSEL<1:0> in the UxMODE register are used to select the data length and parity used in the transmission. The data length may either be 8 bits with even, odd or no parity, or 9 bits with no parity.

The STSEL bit determines whether one or two Stop bits will be used during data transmission.

The default (power-on) setting of the UART is 8 bits, no parity and 1 Stop bit (typically represented as 8, N, 1).

16.3 Transmitting Data

16.3.1 TRANSMITTING IN 8-BIT DATA MODE

The following steps must be performed in order to transmit 8-bit data:

1. Set up the UART:
   First, the data length, parity and number of Stop bits must be selected. Then, the transmit and receive interrupt enable and priority bits are set up in the UxMODE and UxSTA registers. Also, the appropriate baud rate value must be written to the UxBRG register.
2. Enable the UART by setting the UARTEN bit (UxMODE<15>).
3. Set the UTXEN bit (UxSTA<10>), thereby enabling a transmission.
4. Write the byte to be transmitted to the lower byte of UxTXREG. The value will be transferred to the Transmit Shift register (UxTSR) immediately and the serial bit stream will start shifting out during the next rising edge of the baud clock. Alternatively, the data byte may be written while UTXEN = 0, following which, the user may set UTXEN. This will cause the serial bit stream to begin immediately because the baud clock will start from a cleared state.
5. A transmit interrupt will be generated, depending on the value of the interrupt control bit UTXISEL (UxSTA<15>).

16.3.2 TRANSMITTING IN 9-BIT DATA MODE

The sequence of steps involved in the transmission of 9-bit data is similar to 8-bit transmission, except that a 16-bit data word (of which the upper 7 bits are always clear) must be written to the UxTXREG register.

16.3.3 TRANSMIT BUFFER (UxTXB)

The transmit buffer is 9 bits wide and 4 characters deep. Including the Transmit Shift register (UxTSR), the user effectively has a 5-deep FIFO (First-In, First-Out) buffer. The UTXBF status bit (UxSTA<9>) indicates whether the transmit buffer is full.

If a user attempts to write to a full buffer, the new data will not be accepted into the FIFO, and no data shift will occur within the buffer. This enables recovery from a buffer overrun condition.

The FIFO is reset during any device Reset but is not affected when the device enters or wakes up from a power-saving mode.

Downloaded from Arrow.com.

16.3.4 TRANSMIT INTERRUPT

The transmit interrupt flag (U1TXIF or U2TXIF) is located in the corresponding interrupt flag register.

The transmitter generates an edge to set the UxTXIF bit. The condition for generating the interrupt depends on the UTXISEL control bit:

1. If UTXISEL = 0, an interrupt is generated when a word is transferred from the transmit buffer to the Transmit Shift register (UxTSR). This implies that the transmit buffer has at least one empty word.
2. If UTXISEL = 1, an interrupt is generated when a word is transferred from the transmit buffer to the Transmit Shift register (UxTSR) and the transmit buffer is empty.

Switching between the two Interrupt modes during operation is possible and sometimes offers more flexibility.

16.3.5 TRANSMIT BREAK

Setting the UTXBRK bit (UxSTA<11>) will cause the UxTX line to be driven to logic '0'. The UTXBRK bit overrides all transmission activity. Therefore, the user should generally wait for the transmitter to be Idle before setting UTXBRK.

To send a break character, the UTXBRK bit must be set by software and must remain set for a minimum of 13 baud clock cycles. The UTXBRK bit is then cleared by software to generate Stop bits. The user must wait for a duration of at least one or two baud clock cycles in order to ensure a valid Stop bit(s) before reloading the UxTXB, or starting other transmitter activity. Transmission of a break character does not generate a transmit interrupt.

16.4 Receiving Data

16.4.1 RECEIVING IN 8-BIT OR 9-BIT DATA MODE

The following steps must be performed while receiving 8-bit or 9-bit data:

1. Set up the UART (see **Section 16.3.1 "Transmitting in 8-bit data mode"**).
2. Enable the UART (see **Section 16.3.1 "Transmitting in 8-bit data mode"**).
3. A receive interrupt will be generated when one or more data words have been received, depending on the receive interrupt settings specified by the URXISEL bits (UxSTA<7:6>).
4. Read the OERR bit to determine if an overrun error has occurred. The OERR bit must be reset in software.
5. Read the received data from UxRXREG. The act of reading UxRXREG will move the next word to the top of the receive FIFO, and the PERR and FERR values will be updated.

16.4.2 RECEIVE BUFFER (UxRXB)

The receive buffer is 4 words deep. Including the Receive Shift register (UxRSR), the user effectively has a 5-word deep FIFO buffer.

URXDA (UxSTA<0>) = 1 indicates that the receive buffer has data available. URXDA = 0 implies that the buffer is empty. If a user attempts to read an empty buffer, the old values in the buffer will be read and no data shift will occur within the FIFO.

The FIFO is reset during any device Reset. It is not affected when the device enters or wakes up from a Power-Saving mode.

16.4.3 RECEIVE INTERRUPT

The receive interrupt flag (U1RXIF or U2RXIF) can be read from the corresponding interrupt flag register. The interrupt flag is set by an edge generated by the receiver. The condition for setting the receive interrupt flag depends on the settings specified by the URXISEL<1:0> (UxSTA<7:6>) control bits.

a) If URXISEL<1:0> = 00 or 01, an interrupt is generated every time a data word is transferred from the Receive Shift register (UxRSR) to the receive buffer. There may be one or more characters in the receive buffer.
b) If URXISEL<1:0> = 10, an interrupt is generated when a word is transferred from the Receive Shift register (UxRSR) to the receive buffer, which as a result of the transfer, contains 3 characters.
c) If URXISEL<1:0> = 11, an interrupt is set when a word is transferred from the Receive Shift register (UxRSR) to the receive buffer, which as a result of the transfer, contains 4 characters (i.e., becomes full).

Switching between the Interrupt modes during operation is possible, though generally not advisable during normal operation.

16.5 Reception Error Handling

16.5.1 RECEIVE BUFFER OVERRUN ERROR (OERR BIT)

The OERR bit (UxSTA<1>) is set if all of the following conditions occur:

a) The receive buffer is full.
b) The Receive Shift register is full, but unable to transfer the character to the receive buffer.
c) The Stop bit of the character in the UxRSR is detected, indicating that the UxRSR needs to transfer the character to the buffer.

Once OERR is set, no further data is shifted in UxRSR (until the OERR bit is cleared in software or a Reset occurs). The data held in UxRSR and UxRXREG remains valid.

© 2011 Microchip Technology Inc.

Downloaded from Arrow.com.

16.5.2 FRAMING ERROR (FERR)

The FERR bit (UxSTA<2>) is set if a '0' is detected instead of a Stop bit. If two Stop bits are selected, both Stop bits must be '1', otherwise FERR will be set. The read only FERR bit is buffered along with the received data. It is cleared on any Reset.

16.5.3 PARITY ERROR (PERR)

The PERR bit (UxSTA<3>) is set if the parity of the received word is incorrect. This error bit is applicable only if a Parity mode (odd or even) is selected. The read only PERR bit is buffered along with the received data bytes. It is cleared on any Reset.

16.5.4 IDLE STATUS

When the receiver is active (i.e., between the initial detection of the Start bit and the completion of the Stop bit), the RIDLE bit (UxSTA<4>) is '0'. Between the completion of the Stop bit and detection of the next Start bit, the RIDLE bit is '1', indicating that the UART is Idle.

16.5.5 RECEIVE BREAK

The receiver will count and expect a certain number of bit times based on the values programmed in the PDSEL (UxMODE<2:1>) and STSEL (UxMODE<0>) bits.

If the break is longer than 13 bit times, the reception is considered complete after the number of bit times specified by PDSEL and STSEL. The URXDA bit is set, FERR is set, zeros are loaded into the receive FIFO, interrupts are generated if appropriate and the RIDLE bit is set.

When the module receives a long break signal and the receiver has detected the Start bit, the data bits and the invalid Stop bit (which sets the FERR), the receiver must wait for a valid Stop bit before looking for the next Start bit. It cannot assume that the break condition on the line is the next Start bit.

Break is regarded as a character containing all '0's with the FERR bit set. The break character is loaded into the buffer. No further reception can occur until a Stop bit is received. Note that RIDLE goes high when the Stop bit has not yet been received.

16.6 Address Detect Mode

Setting the ADDEN bit (UxSTA<5>) enables this special mode in which a 9th bit (URX8) value of '1' identifies the received word as an address, rather than data. This mode is only applicable for 9-bit data communication. The URXISEL control bit does not have any impact on interrupt generation in this mode since an interrupt (if enabled) will be generated every time the received word has the 9th bit set.

16.7 Loopback Mode

Setting the LPBACK bit enables this special mode in which the UxTX pin is internally connected to the UxRX pin. When configured for the Loopback mode, the UxRX pin is disconnected from the internal UART receive logic. However, the UxTX pin still functions as in a normal operation.

To select this mode:

1. Configure UART for desired mode of operation.
2. Set LPBACK = 1 to enable Loopback mode.
3. Enable transmission as defined in **Section 16.3 "Transmitting Data"**.

16.8 Baud Rate Generator

The UART has a 16-bit Baud Rate Generator to allow maximum flexibility in baud rate generation. The Baud Rate Generator register (UxBRG) is readable and writable. The baud rate is computed as shown in Equation 16-1:

EQUATION 16-1: BAUD RATE

$$\text{Baud Rate} = F_{CY}/(16 * (BRG + 1))$$

Where:

BRG = 16-bit value held in UxBRG register (0 through 65535)

F_{CY} = Instruction Clock Rate ($1/T_{CY}$)

Therefore, the maximum baud rate possible is:

$F_{CY}/16$ (if BRG = 0),

and the minimum baud rate possible is:

$F_{CY}/(16 * 65536)$.

With a full 16-bit Baud Rate Generator at 30 MIPS operation, the minimum baud rate achievable is 28.5 bps.

Downloaded from Arrow.com.

16.9 Auto-Baud Support

To allow the system to determine baud rates of received characters, the input can be optionally linked to a capture input (IC1 for UART1, IC2 for UART2). To enable this mode, the user must program the input capture module to detect the falling and rising edges of the Start bit.

16.10 UART Operation During CPU Sleep and Idle Modes

16.10.1 UART OPERATION DURING CPU SLEEP MODE

When the device enters Sleep mode, all clock sources to the module are shutdown and stay at logic '0'. If entry into Sleep mode occurs while a transmission is in progress, then the transmission is aborted. The UxTX pin is driven to logic '1'. Similarly, if entry into Sleep mode occurs while a reception is in progress, then the reception is aborted. The UxSTA, UxMODE, transmit and receive registers and buffers, and the UxBRG register are not affected by Sleep mode.

If the WAKE bit (UxMODE<7>) is set before the device enters Sleep mode, then a falling edge on the UxRX pin will generate a receive interrupt. The Receive Interrupt Select mode bit (URXISEL) has no effect for this function. If the receive interrupt is enabled, then this will wake-up the device from Sleep. The UARTEN bit must be set in order to generate a wake-up interrupt.

16.10.2 UART OPERATION DURING CPU IDLE MODE

For the UART, the USIDL bit selects if the module will stop operation when the device enters Idle mode or whether the module will continue on Idle. If USIDL = 0, the module will continue operation during Idle mode. If USIDL = 1, the module will stop on Idle.

© 2011 Microchip Technology Inc.

Downloaded from Arrow.com.

TABLE 16-1: UART1 REGISTER MAP(1)

SFR Name	Addr.	Bit 15	Bit 14	Bit 13	Bit 12	Bit 11	Bit 10	Bit 9	Bit 8	Bit 7	Bit 6	Bit 5	Bit 4	Bit 3	Bit 2	Bit 1	Bit 0	Reset State
U1MODE	020C	UARTEN	—	USIDL	—	—	—	—	—	WAKE	LPBACK	ABAUD	—	—	PDSEL1	PDSEL0	STSEL	0000 0000 0000 0000
U1STA	020E	UTXISEL	—	—	—	UTXBRK	UTXEN	UTXBF	TRMT	URXISEL1	URXISEL0	ADDEN	RIDLE	PERR	FERR	OERR	URXDA	0000 0001 0001 0000
U1TXREG	0210	—	—	—	—	—	—	—	UTX8	Transmit Register								0000 000u uuuu uuuu
U1RXREG	0212	—	—	—	—	—	—	—	URX8	Receive Register								0000 0000 0000 0000
U1BRG	0214	Baud Rate Generator Prescaler																0000 0000 0000 0000

Legend: u = uninitialized bit; — = unimplemented bit, read as '0'

Note 1: Refer to the *"dsPIC30F Family Reference Manual"* (DS70046) for descriptions of register bit fields.

TABLE 16-2: UART2 REGISTER MAP(1)

SFR Name	Addr.	Bit 15	Bit 14	Bit 13	Bit 12	Bit 11	Bit 10	Bit 9	Bit 8	Bit 7	Bit 6	Bit 5	Bit 4	Bit 3	Bit 2	Bit 1	Bit 0	Reset State
U2MODE	0216	UARTEN	—	USIDL	—	—	—	—	—	WAKE	LPBACK	ABAUD	—	—	PDSEL1	PDSEL0	STSEL	0000 0000 0000 0000
U2STA	0218	UTXISEL	—	—	—	UTXBRK	UTXEN	UTXBF	TRMT	URXISEL1	URXISEL0	ADDEN	RIDLE	PERR	FERR	OERR	URXDA	0000 0001 0001 0000
U2TXREG	021A	—	—	—	—	—	—	—	UTX8	Transmit Register								0000 000u uuuu uuuu
U2RXREG	021C	—	—	—	—	—	—	—	URX8	Receive Register								0000 0000 0000 0000
U2BRG	021E	Baud Rate Generator Prescaler																0000 0000 0000 0000

Legend: u = uninitialized bit; — = unimplemented bit, read as '0'

Note 1: Refer to the *"dsPIC30F Family Reference Manual"* (DS70046) for descriptions of register bit fields.

© 2011 Microchip Technology Inc.

Downloaded from Arrow.com.

NOTES:

© 2011 Microchip Technology Inc.

Downloaded from Arrow.com.

17.0 CAN MODULE

Note: This data sheet summarizes features of this group of dsPIC30F devices and is not intended to be a complete reference source. For more information on the CPU, peripherals, register descriptions and general device functionality, refer to the "*dsPIC30F Family Reference Manual*" (DS70046).

17.1 Overview

The Controller Area Network (CAN) module is a serial interface, useful for communicating with other CAN modules or microcontroller devices. This interface/protocol was designed to allow communications within noisy environments.

The CAN module is a communication controller implementing the CAN 2.0 A/B protocol, as defined in the BOSCH specification. The module will support CAN 1.2, CAN 2.0A, CAN 2.0B Passive and CAN 2.0B Active versions of the protocol. The module implementation is a full CAN system. The CAN specification is not covered within this data sheet. The reader may refer to the BOSCH CAN specification for further details.

The module features are as follows:

- Implementation of the CAN protocol CAN 1.2, CAN 2.0A and CAN 2.0B
- Standard and extended data frames
- 0-8 bytes data length
- Programmable bit rate up to 1 Mbps
- Support for remote frames
- Double-buffered receiver with two prioritized received message storage buffers (each buffer may contain up to 8 bytes of data)
- 6 full (standard/extended identifier) acceptance filters, 2 associated with the high priority receive buffer and 4 associated with the low priority receive buffer
- 2 full acceptance filter masks, one each associated with the high and low priority receive buffers
- Three transmit buffers with application specified prioritization and abort capability (each buffer may contain up to 8 bytes of data)
- Programmable wake-up functionality with integrated low-pass filter
- Programmable Loopback mode supports self-test operation
- Signaling via interrupt capabilities for all CAN receiver and transmitter error states
- Programmable clock source
- Programmable link to Input Capture module (IC2, for both CAN1 and CAN2) for time-stamping and network synchronization
- Low-power Sleep and Idle mode

The CAN bus module consists of a protocol engine and message buffering/control. The CAN protocol engine handles all functions for receiving and transmitting messages on the CAN bus. Messages are transmitted by first loading the appropriate data registers. Status and errors can be checked by reading the appropriate registers. Any message detected on the CAN bus is checked for errors and then matched against filters to see if it should be received and stored in one of the receive registers.

17.2 Frame Types

The CAN module transmits various types of frames which include data messages or remote transmission requests initiated by the user, as other frames that are automatically generated for control purposes. The following frame types are supported:

- Standard Data Frame:

  A standard data frame is generated by a node when the node wishes to transmit data. It includes an 11-bit Standard Identifier (SID) but not an 18-bit Extended Identifier (EID).

- Extended Data Frame:

  An extended data frame is similar to a standard data frame but includes an extended identifier as well.

- Remote Frame:

  It is possible for a destination node to request the data from the source. For this purpose, the destination node sends a remote frame with an identifier that matches the identifier of the required data frame. The appropriate data source node will then send a data frame as a response to this remote request.

- Error Frame:

  An error frame is generated by any node that detects a bus error. An error frame consists of 2 fields: an error flag field and an error delimiter field.

- Overload Frame:

  An overload frame can be generated by a node as a result of 2 conditions. First, the node detects a dominant bit during interframe space which is an illegal condition. Second, due to internal conditions, the node is not yet able to start reception of the next message. A node may generate a maximum of 2 sequential overload frames to delay the start of the next message.

- Interframe Space:

  Interframe space separates a proceeding frame (of whatever type) from a following data or remote frame.

Downloaded from Arrow.com.

FIGURE 17-1: CAN BUFFERS AND PROTOCOL ENGINE BLOCK DIAGRAM

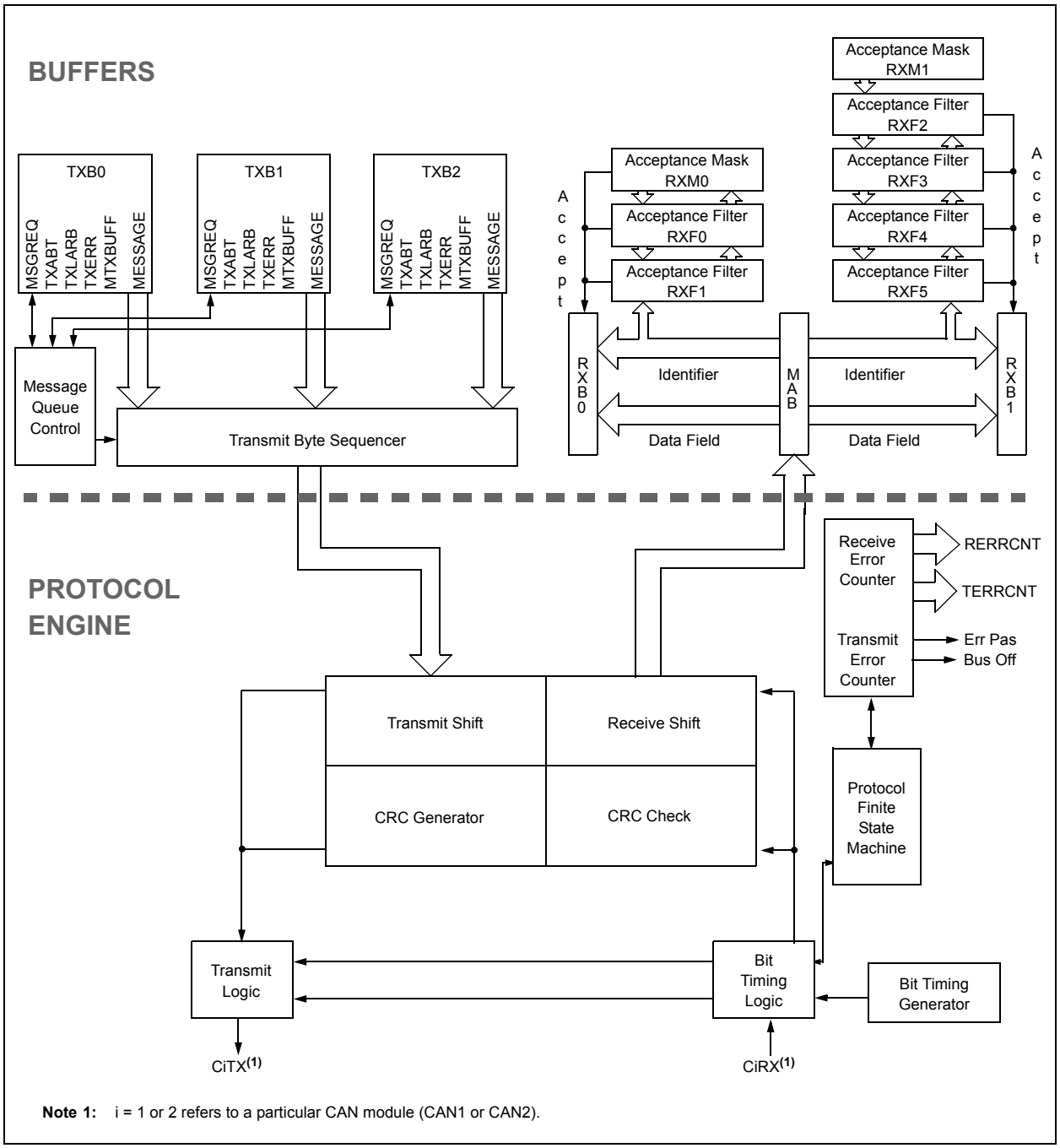

Note 1: i = 1 or 2 refers to a particular CAN module (CAN1 or CAN2).

© 2011 Microchip Technology Inc.

Downloaded from Arrow.com.

17.3 Modes of Operation

The CAN module can operate in one of several Operation modes selected by the user. These modes include:

- Initialization Mode
- Disable Mode
- Normal Operation Mode
- Listen Only Mode
- Loopback Mode
- Error Recognition Mode

Modes are requested by setting the REQOP<2:0> bits (CiCTRL<10:8>). Entry into a mode is Acknowledged by monitoring the OPMODE<2:0> bits (CiCTRL<7:5>). The module will not change the mode and the OPMODE bits until a change in mode is acceptable, generally during bus Idle time which is defined as at least 11 consecutive recessive bits.

17.3.1 INITIALIZATION MODE

In the Initialization mode, the module will not transmit or receive. The error counters are cleared and the interrupt flags remain unchanged. The programmer will have access to configuration registers that are access restricted in other modes. The module will protect the user from accidentally violating the CAN protocol through programming errors. All registers which control the configuration of the module can not be modified while the module is on-line. The CAN module will not be allowed to enter the Configuration mode while a transmission is taking place. The Configuration mode serves as a lock to protect the following registers.

- All Module Control Registers
- Baud Rate and Interrupt Configuration Registers
- Bus Timing Registers
- Identifier Acceptance Filter Registers
- Identifier Acceptance Mask Registers

17.3.2 DISABLE MODE

In Disable mode, the module will not transmit or receive. The module has the ability to set the WAKIF bit due to bus activity, however, any pending interrupts will remain and the error counters will retain their value.

If the REQOP<2:0> bits (CiCTRL<10:8>) = `001`, the module will enter the Module Disable mode. If the module is active, the module will wait for 11 recessive bits on the CAN bus, detect that condition as an Idle bus, then accept the module disable command. When the OPMODE<2:0> bits (CiCTRL<7:5>) = `001`, that indicates whether the module successfully went into Module Disable mode. The I/O pins will revert to normal I/O function when the module is in the Module Disable mode.

The module can be programmed to apply a low-pass filter function to the CiRX input line while the module or the CPU is in Sleep mode. The WAKFIL bit (CiCFG2<14>) enables or disables the filter.

Note:	Typically, if the CAN module is allowed to transmit in a particular mode of operation and a transmission is requested immediately after the CAN module has been placed in that mode of operation, the module waits for 11 consecutive recessive bits on the bus before starting transmission. If the user switches to Disable mode within this 11-bit period, then this transmission is aborted and the corresponding TXABT bit is set and TXREQ bit is cleared.

17.3.3 NORMAL OPERATION MODE

Normal Operating mode is selected when REQOP<2:0> = `000`. In this mode, the module is activated and the I/O pins will assume the CAN bus functions. The module will transmit and receive CAN bus messages via the CxTX and CxRX pins.

17.3.4 LISTEN ONLY MODE

If the Listen Only mode is activated, the module on the CAN bus is passive. The transmitter buffers revert to the port I/O function. The receive pins remain inputs. For the receiver, no error flags or Acknowledge signals are sent. The error counters are deactivated in this state. The Listen Only mode can be used for detecting the baud rate on the CAN bus. To use this, it is necessary that there are at least two further nodes that communicate with each other.

17.3.5 LISTEN ALL MESSAGES MODE

The module can be set to ignore all errors and receive any message. The Error Recognition mode is activated by setting REQOP<2:0> = `111`. In this mode, the data which is in the message assembly buffer until the time an error occurred, is copied in the receive buffer and can be read via the CPU interface.

17.3.6 LOOPBACK MODE

If the Loopback mode is activated, the module will connect the internal transmit signal to the internal receive signal at the module boundary. The transmit and receive pins revert to their port I/O function.

Downloaded from Arrow.com.

17.4 Message Reception

17.4.1 RECEIVE BUFFERS

The CAN bus module has 3 receive buffers. However, one of the receive buffers is always committed to monitoring the bus for incoming messages. This buffer is called the Message Assembly Buffer (MAB). So there are 2 receive buffers visible, RXB0 and RXB1, that can essentially instantaneously receive a complete message from the protocol engine.

All messages are assembled by the MAB and are transferred to the RXBn buffers only if the acceptance filter criterion are met. When a message is received, the RXnIF flag (CiINTF<0> or CiINRF<1>) will be set. This bit can only be set by the module when a message is received. The bit is cleared by the CPU when it has completed processing the message in the buffer. If the RXnIE bit (CiINTE<0> or CiINTE<1>) is set, an interrupt will be generated when a message is received.

RXF0 and RXF1 filters with RXM0 mask are associated with RXB0. The filters RXF2, RXF3, RXF4, and RXF5 and the mask RXM1 are associated with RXB1.

17.4.2 MESSAGE ACCEPTANCE FILTERS

The message acceptance filters and masks are used to determine if a message in the message assembly buffer should be loaded into either of the receive buffers. Once a valid message has been received into the Message Assembly Buffer (MAB), the identifier fields of the message are compared to the filter values. If there is a match, that message will be loaded into the appropriate receive buffer.

The acceptance filter looks at incoming messages for the RXIDE bit (CiRXnSID<0>) to determine how to compare the identifiers. If the RXIDE bit is clear, the message is a standard frame and only filters with the EXIDE bit (CiRXFnSID<0>) clear are compared. If the RXIDE bit is set, the message is an extended frame, and only filters with the EXIDE bit set are compared. Configuring the RXM<1:0> bits to ‘01’ or ‘10’ can override the EXIDE bit.

17.4.3 MESSAGE ACCEPTANCE FILTER MASKS

The mask bits essentially determine which bits to apply the filter to. If any mask bit is set to a zero, then that bit will automatically be accepted regardless of the filter bit. There are 2 programmable acceptance filter masks associated with the receive buffers, one for each buffer.

17.4.4 RECEIVE OVERRUN

An overrun condition occurs when the Message Assembly Buffer (MAB) has assembled a valid received message, the message is accepted through the acceptance filters and when the receive buffer associated with the filter has not been designated as clear of the previous message.

The overrun error flag, RXnOVR (CiINTF<15> or CiINTF<14>), and the ERRIF bit (CiINTF<5>) will be set and the message in the MAB will be discarded.

If the DBEN bit is clear, RXB1 and RXB0 operate independently. When this is the case, a message intended for RXB0 will not be diverted into RXB1 if RXB0 contains an unread message and the RX0OVR bit will be set.

If the DBEN bit is set, the overrun for RXB0 is handled differently. If a valid message is received for RXB0 and RXFUL = 1 indicates that RXB0 is full and RXFUL = 0 indicates that RXB1 is empty, the message for RXB0 will be loaded into RXB1. An overrun error will not be generated for RXB0. If a valid message is received for RXB0 and RXFUL = 1, indicating that both RXB0 and RXB1 are full, the message will be lost and an overrun will be indicated for RXB1.

17.4.5 RECEIVE ERRORS

The CAN module will detect the following receive errors:

- Cyclic Redundancy Check (CRC) Error
- Bit Stuffing Error
- Invalid Message Receive Error

The receive error counter is incremented by one in case one of these errors occur. The RXWAR bit (CiINTF<9>) indicates that the receive error counter has reached the CPU warning limit of 96 and an interrupt is generated.

17.4.6 RECEIVE INTERRUPTS

Receive interrupts can be divided into 3 major groups, each including various conditions that generate interrupts:

- Receive Interrupt:

  A message has been successfully received and loaded into one of the receive buffers. This interrupt is activated immediately after receiving the End of Frame (EOF) field. Reading the RXnIF flag will indicate which receive buffer caused the interrupt.

- Wake-up Interrupt:

  The CAN module has woken up from Disable mode or the device has woken up from Sleep mode.

© 2011 Microchip Technology Inc.

Downloaded from Arrow.com.

- Receive Error Interrupts:

  A receive error interrupt will be indicated by the ERRIF bit. This bit shows that an error condition occurred. The source of the error can be determined by checking the bits in the CAN Interrupt status register, CiINTF.

  - Invalid Message Received:

    If any type of error occurred during reception of the last message, an error will be indicated by the IVRIF bit.

  - Receiver Overrun:

    The RXnOVR bit indicates that an overrun condition occurred.

  - Receiver Warning:

    The RXWAR bit indicates that the receive error counter (RERRCNT<7:0>) has reached the warning limit of 96.

  - Receiver Error Passive:

    The RXEP bit indicates that the receive error counter has exceeded the error passive limit of 127 and the module has gone into error passive state.

17.5 Message Transmission

17.5.1 TRANSMIT BUFFERS

The CAN module has three transmit buffers. Each of the three buffers occupies 14 bytes of data. Eight of the bytes are the maximum 8 bytes of the transmitted message. Five bytes hold the standard and extended identifiers and other message arbitration information.

17.5.2 TRANSMIT MESSAGE PRIORITY

Transmit priority is a prioritization within each node of the pending transmittable messages. There are 4 levels of transmit priority. If TXPRI<1:0> (CiTXnCON<1:0>, where n = 0, 1 or 2 represents a particular transmit buffer) for a particular message buffer is set to '11', that buffer has the highest priority. If TXPRI<1:0> for a particular message buffer is set to '10' or '01', that buffer has an intermediate priority. If TXPRI<1:0> for a particular message buffer is '00', that buffer has the lowest priority.

17.5.3 TRANSMISSION SEQUENCE

To initiate transmission of the message, the TXREQ bit (CiTXnCON<3>) must be set. The CAN bus module resolves any timing conflicts between setting of the TXREQ bit and the Start of Frame (SOF), ensuring that if the priority was changed, it is resolved correctly before the SOF occurs. When the TXREQ is set, the TXABT (CiTXnCON<6>), TXLARB (CiTXnCON<5>) and TXERR (CiTXnCON<4>) flag bits are automatically cleared.

Setting the TXREQ bit simply flags a message buffer as enqueued for transmission. When the module detects an available bus, it begins transmitting the message which has been determined to have the highest priority.

If the transmission completes successfully on the first attempt, the TXREQ bit is cleared automatically, and an interrupt is generated if TXIE was set.

If the message transmission fails, one of the error condition flags will be set, and the TXREQ bit will remain set indicating that the message is still pending for transmission. If the message encountered an error condition during the transmission attempt, the TXERR bit will be set, and the error condition may cause an interrupt. If the message loses arbitration during the transmission attempt, the TXLARB bit is set. No interrupt is generated to signal the loss of arbitration.

17.5.4 ABORTING MESSAGE TRANSMISSION

The system can also abort a message by clearing the TXREQ bit associated with each message buffer. Setting the ABAT bit (CiCTRL<12>) will request an abort of all pending messages. If the message has not yet started transmission, or if the message started but is interrupted by loss of arbitration or an error, the abort will be processed. The abort is indicated when the module sets the TXABT bit and the TXnIF flag is not automatically set.

17.5.5 TRANSMISSION ERRORS

The CAN module will detect the following transmission errors:

- Acknowledge Error
- Form Error
- Bit Error

These transmission errors will not necessarily generate an interrupt but are indicated by the transmission error counter. However, each of these errors will cause the transmission error counter to be incremented by one. Once the value of the error counter exceeds the value of 96, the ERRIF (CiINTF<5>) and the TXWAR bit (CiINTF<10>) are set. Once the value of the error counter exceeds the value of 96, an interrupt is generated and the TXWAR bit in the Error Flag register is set.

Downloaded from Arrow.com.

17.5.6 TRANSMIT INTERRUPTS

Transmit interrupts can be divided into 2 major groups, each including various conditions that generate interrupts:

- Transmit Interrupt:

  At least one of the three transmit buffers is empty (not scheduled) and can be loaded to schedule a message for transmission. Reading the TXnIF flags will indicate which transmit buffer is available and caused the interrupt.

- Transmit Error Interrupts:

  A transmission error interrupt will be indicated by the ERRIF flag. This flag shows that an error condition occurred. The source of the error can be determined by checking the error flags in the CAN Interrupt status register, CiINTF. The flags in this register are related to receive and transmit errors.

  - Transmitter Warning Interrupt:

    The TXWAR bit indicates that the transmit error counter has reached the CPU warning limit of 96.

  - Transmitter Error Passive:

    The TXEP bit (CiINTF<12>) indicates that the transmit error counter has exceeded the error passive limit of 127 and the module has gone to error passive state.

  - Bus Off:

    The TXBO bit (CiINTF<13>) indicates that the transmit error counter has exceeded 255 and the module has gone to the bus off state.

17.6 Baud Rate Setting

All nodes on any particular CAN bus must have the same nominal bit rate. In order to set the baud rate, the following parameters have to be initialized:

- Synchronization Jump Width
- Baud Rate Prescaler
- Phase Segments
- Length determination of Phase Segment 2
- Sample Point
- Propagation Segment bits

17.6.1 BIT TIMING

All controllers on the CAN bus must have the same baud rate and bit length. However, different controllers are not required to have the same master oscillator clock. At different clock frequencies of the individual controllers, the baud rate has to be adjusted by adjusting the number of time quanta in each segment.

The nominal bit time can be thought of as being divided into separate non-overlapping time segments. These segments are shown in Figure 17-2.

- Synchronization Segment (Sync Seg)
- Propagation Time Segment (Prop Seg)
- Phase Segment 1 (Phase1 Seg)
- Phase Segment 2 (Phase2 Seg)

The time segments and also the nominal bit time are made up of integer units of time called time quanta or TQ. By definition, the nominal bit time has a minimum of 8 TQ and a maximum of 25 TQ. Also, by definition, the minimum nominal bit time is 1 µsec corresponding to a maximum bit rate of 1 MHz.

FIGURE 17-2: CAN BIT TIMING

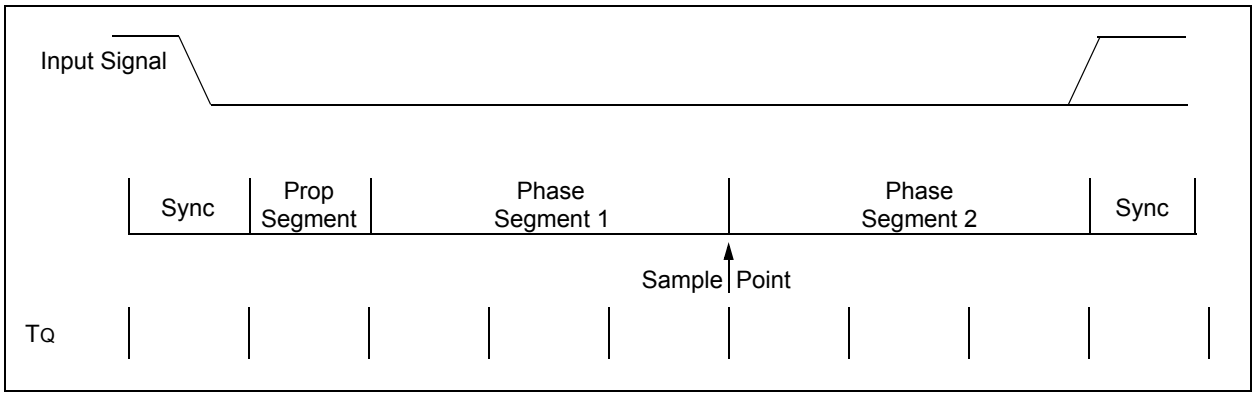

© 2011 Microchip Technology Inc.

Downloaded from Arrow.com.

17.6.2 PRESCALER SETTING

There is a programmable prescaler with integral values ranging from 1 to 64, in addition to a fixed divide-by-2 for clock generation. The time quantum (TQ) is a fixed unit of time derived from the oscillator period, and is given by Equation 17-1.

Note: FCAN must not exceed 30 MHz. If CANCKS = 0, then FCY must not exceed 7.5 MHz.

EQUATION 17-1: TIME QUANTUM FOR CLOCK GENERATION

$$T_Q = 2\,(BRP<5:0> + 1) / F_{CAN}$$

17.6.3 PROPAGATION SEGMENT

This part of the bit time is used to compensate physical delay times within the network. These delay times consist of the signal propagation time on the bus line and the internal delay time of the nodes. The Prop Seg can be programmed from 1 TQ to 8 TQ by setting the PRSEG<2:0> bits (CiCFG2<2:0>).

17.6.4 PHASE SEGMENTS

The phase segments are used to optimally locate the sampling of the received bit within the transmitted bit time. The sampling point is between Phase1 Seg and Phase2 Seg. These segments are lengthened or shortened by resynchronization. The end of the Phase1 Seg determines the sampling point within a bit period. The segment is programmable from 1 TQ to 8 TQ. Phase2 Seg provides delay to the next transmitted data transition. The segment is programmable from 1 TQ to 8 TQ, or it may be defined to be equal to the greater of Phase1 Seg or the information processing time (2 TQ). The Phase1 Seg is initialized by setting bits SEG1PH<2:0> (CiCFG2<5:3>), and Phase2 Seg is initialized by setting SEG2PH<2:0> (CiCFG2<10:8>).

The following requirement must be fulfilled while setting the lengths of the phase segments:

Prop Seg + Phase1 Seg > = Phase2 Seg

17.6.5 SAMPLE POINT

The sample point is the point of time at which the bus level is read and interpreted as the value of that respective bit. The location is at the end of Phase1 Seg. If the bit timing is slow and contains many TQ, it is possible to specify multiple sampling of the bus line at the sample point. The level determined by the CAN bus then corresponds to the result from the majority decision of three values. The majority samples are taken at the sample point and twice before with a distance of TQ/2. The CAN module allows the user to choose between sampling three times at the same point or once at the same point, by setting or clearing the SAM bit (CiCFG2<6>).

Typically, the sampling of the bit should take place at about 60-70% through the bit time, depending on the system parameters.

17.6.6 SYNCHRONIZATION

To compensate for phase shifts between the oscillator frequencies of the different bus stations, each CAN controller must be able to synchronize to the relevant signal edge of the incoming signal. When an edge in the transmitted data is detected, the logic will compare the location of the edge to the expected time (Synchronous Segment). The circuit will then adjust the values of Phase1 Seg and Phase2 Seg. There are 2 mechanisms used to synchronize.

17.6.6.1 Hard Synchronization

Hard synchronization is only done whenever there is a ‘recessive’ to ‘dominant’ edge during bus Idle indicating the start of a message. After hard synchronization, the bit time counters are restarted with the Sync Seg. Hard synchronization forces the edge which has caused the hard synchronization to lie within the synchronization segment of the restarted bit time. If a hard synchronization is done, there will not be a resynchronization within that bit time.

17.6.6.2 Resynchronization

As a result of resynchronization, Phase1 Seg may be lengthened or Phase2 Seg may be shortened. The amount of lengthening or shortening of the phase buffer segment has an upper bound known as the synchronization jump width, and is specified by the SJW<1:0> bits (CiCFG1<7:6>). The value of the synchronization jump width will be added to Phase1 Seg or subtracted from Phase2 Seg. The resynchronization jump width is programmable between 1 TQ and 4 TQ.

The following requirement must be fulfilled while setting the SJW<1:0> bits:

Phase2 Seg > Synchronization Jump Width

Downloaded from Arrow.com.

TABLE 17-1: CAN1 REGISTER MAP(1)

SFR Name	Addr	Bit 15	Bit 14	Bit 13	Bit 12	Bit 11	Bit 10	Bit 9	Bit 8	Bit 7	Bit 6	Bit 5	Bit 4	Bit 3	Bit 2	Bit 1	Bit 0	Reset State
C1RXF0SID	0300	—	—	—	Receive Acceptance Filter 0 Standard Identifier <10:0>											—	EXIDE	000u uuuu uuuu uu0u
C1RXF0EIDH	0302	—	—	—	—	Receive Acceptance Filter 0 Extended Identifier <17:6>												0000 uuuu uuuu uuuu
C1RXF0EIDL	0304	Receive Acceptance Filter 0 Extended Identifier <5:0>						—	—	—	—	—	—	—	—	—	—	uuuu uu00 0000 0000
C1RXF1SID	0308	—	—	—	Receive Acceptance Filter 1 Standard Identifier <10:0>											—	EXIDE	000u uuuu uuuu uu0u
C1RXF1EIDH	030A	—	—	—	—	Receive Acceptance Filter 1 Extended Identifier <17:6>												0000 uuuu uuuu uuuu
C1RXF1EIDL	030C	Receive Acceptance Filter 1 Extended Identifier <5:0>						—	—	—	—	—	—	—	—	—	—	uuuu uu00 0000 0000
C1RXF2SID	0310	—	—	—	Receive Acceptance Filter 2 Standard Identifier <10:0>											—	EXIDE	000u uuuu uuuu uu0u
C1RXF2EIDH	0312	—	—	—	—	Receive Acceptance Filter 2 Extended Identifier <17:6>												0000 uuuu uuuu uuuu
C1RXF2EIDL	0314	Receive Acceptance Filter 2 Extended Identifier <5:0>						—	—	—	—	—	—	—	—	—	—	uuuu uu00 0000 0000
C1RXF3SID	0318	—	—	—	Receive Acceptance Filter 3 Standard Identifier <10:0>											—	EXIDE	000u uuuu uuuu uu0u
C1RXF3EIDH	031A	—	—	—	—	Receive Acceptance Filter 3 Extended Identifier <17:6>												0000 uuuu uuuu uuuu
C1RXF3EIDL	031C	Receive Acceptance Filter 3 Extended Identifier <5:0>						—	—	—	—	—	—	—	—	—	—	uuuu uu00 0000 0000
C1RXF4SID	0320	—	—	—	Receive Acceptance Filter 4 Standard Identifier <10:0>											—	EXIDE	000u uuuu uuuu uu0u
C1RXF4EIDH	0322	—	—	—	—	Receive Acceptance Filter 4 Extended Identifier <17:6>												0000 uuuu uuuu uuuu
C1RXF4EIDL	0324	Receive Acceptance Filter 4 Extended Identifier <5:0>						—	—	—	—	—	—	—	—	—	—	uuuu uu00 0000 0000
C1RXF5SID	0328	—	—	—	Receive Acceptance Filter 5 Standard Identifier <10:0>											—	EXIDE	000u uuuu uuuu uu0u
C1RXF5EIDH	032A	—	—	—	—	Receive Acceptance Filter 5 Extended Identifier <17:6>												0000 uuuu uuuu uuuu
C1RXF5EIDL	032C	Receive Acceptance Filter 5 Extended Identifier <5:0>						—	—	—	—	—	—	—	—	—	—	uuuu uu00 0000 0000
C1RXM0SID	0330	—	—	—	Receive Acceptance Mask 0 Standard Identifier <10:0>											—	MIDE	000u uuuu uuuu uu0u
C1RXM0EIDH	0332	—	—	—	—	Receive Acceptance Mask 0 Extended Identifier <17:6>												0000 uuuu uuuu uuuu
C1RXM0EIDL	0334	Receive Acceptance Mask 0 Extended Identifier <5:0>						—	—	—	—	—	—	—	—	—	—	uuuu uu00 0000 0000
C1RXM1SID	0338	—	—	—	Receive Acceptance Mask 1 Standard Identifier <10:0>											—	MIDE	000u uuuu uuuu uu0u
C1RXM1EIDH	033A	—	—	—	—	Receive Acceptance Mask 1 Extended Identifier <17:6>												0000 uuuu uuuu uuuu
C1RXM1EIDL	033C	Receive Acceptance Mask 1 Extended Identifier <5:0>						—	—	—	—	—	—	—	—	—	—	uuuu uu00 0000 0000
C1TX2SID	0340	Transmit Buffer 2 Standard Identifier <10:6>					—	—	—	Transmit Buffer 2 Standard Identifier <5:0>						SRR	TXIDE	uuuu u000 uuuu uuuu
C1TX2EID	0342	Transmit Buffer 2 Extended Identifier <17:14>				—	—	—	—	Transmit Buffer 2 Extended Identifier <13:6>								uuuu 0000 uuuu uuuu
C1TX2DLC	0344	Transmit Buffer 2 Extended Identifier <5:0>						TXRTR	TXRB1	TXRB0	DLC<3:0>				—	—	—	uuuu uuuu uuuu u000
C1TX2B1	0346	Transmit Buffer 2 Byte 1								Transmit Buffer 2 Byte 0								uuuu uuuu uuuu uuuu
C1TX2B2	0348	Transmit Buffer 2 Byte 3								Transmit Buffer 2 Byte 2								uuuu uuuu uuuu uuuu
C1TX2B3	034A	Transmit Buffer 2 Byte 5								Transmit Buffer 2 Byte 4								uuuu uuuu uuuu uuuu
C1TX2B4	034C	Transmit Buffer 2 Byte 7								Transmit Buffer 2 Byte 6								uuuu uuuu uuuu uuuu
C1TX2CON	034E	—	—	—	—	—	—	—	—	—	TXABT	TXLARB	TXERR	TXREQ	—	TXPRI<1:0>		0000 0000 0000 0000
C1TX1SID	0350	Transmit Buffer 1 Standard Identifier <10:6>					—	—	—	Transmit Buffer 1 Standard Identifier <5:0>						SRR	TXIDE	uuuu u000 uuuu uuuu
C1TX1EID	0352	Transmit Buffer 1 Extended Identifier <17:14>				—	—	—	—	Transmit Buffer 1 Extended Identifier <13:6>								uuuu 0000 uuuu uuuu
C1TX1DLC	0354	Transmit Buffer 1 Extended Identifier <5:0>						TXRTR	TXRB1	TXRB0	DLC<3:0>				—	—	—	uuuu uuuu uuuu u000

Legend: u = uninitialized bit; — = unimplemented bit, read as '0'

Note 1: Refer to the *"dsPIC30F Family Reference Manual"* (DS70046) for descriptions of register bit fields.

© 2011 Microchip Technology Inc.

Downloaded from Arrow.com.

TABLE 17-1: CAN1 REGISTER MAP[1] (CONTINUED)

SFR Name	Addr	Bit 15	Bit 14	Bit 13	Bit 12	Bit 11	Bit 10	Bit 9	Bit 8	Bit 7	Bit 6	Bit 5	Bit 4	Bit 3	Bit 2	Bit 1	Bit 0	Reset State
C1TX1B1	0356	Transmit Buffer 1 Byte 1								Transmit Buffer 1 Byte 0								uuuu uuuu uuuu uuuu
C1TX1B2	0358	Transmit Buffer 1 Byte 3								Transmit Buffer 1 Byte 2								uuuu uuuu uuuu uuuu
C1TX1B3	035A	Transmit Buffer 1 Byte 5								Transmit Buffer 1 Byte 4								uuuu uuuu uuuu uuuu
C1TX1B4	035C	Transmit Buffer 1 Byte 7								Transmit Buffer 1 Byte 6								uuuu uuuu uuuu uuuu
C1TX1CON	035E	—	—	—	—	—	—	—	—	—	TXABT	TXLARB	TXERR	TXREQ	—	TXPRI<1:0>		0000 0000 0000 0000
C1TX0SID	0360	Transmit Buffer 0 Standard Identifier <10:6>					—	—	—	Transmit Buffer 0 Standard Identifier <5:0>						SRR	TXIDE	uuuu u000 uuuu uuuu
C1TX0EID	0362	Transmit Buffer 0 Extended Identifier <17:14>				—	—	—	—	Transmit Buffer 0 Extended Identifier <13:6>								uuuu 0000 uuuu uuuu
C1TX0DLC	0364	Transmit Buffer 0 Extended Identifier <5:0>						TXRTR	TXRB1	TXRB0	DLC<3:0>				—	—	—	uuuu uuuu uuuu u000
C1TX0B1	0366	Transmit Buffer 0 Byte 1								Transmit Buffer 0 Byte 0								uuuu uuuu uuuu uuuu
C1TX0B2	0368	Transmit Buffer 0 Byte 3								Transmit Buffer 0 Byte 2								uuuu uuuu uuuu uuuu
C1TX0B3	036A	Transmit Buffer 0 Byte 5								Transmit Buffer 0 Byte 4								uuuu uuuu uuuu uuuu
C1TX0B4	036C	Transmit Buffer 0 Byte 7								Transmit Buffer 0 Byte 6								uuuu uuuu uuuu uuuu
C1TX0CON	036E	—	—	—	—	—	—	—	—	—	TXABT	TXLARB	TXERR	TXREQ	—	TXPRI<1:0>		0000 0000 0000 0000
C1RX1SID	0370	—	—	—	Receive Buffer 1 Standard Identifier <10:0>											SRR	RXIDE	000u uuuu uuuu uuuu
C1RX1EID	0372	—	—	—	—	Receive Buffer 1 Extended Identifier <17:6>												0000 uuuu uuuu uuuu
C1RX1DLC	0374	Receive Buffer 1 Extended Identifier <5:0>						RXRTR	RXRB1	—	—	—	RXRB0	DLC<3:0>				uuuu uuuu 000u uuuu
C1RX1B1	0376	Receive Buffer 1 Byte 1								Receive Buffer 1 Byte 0								uuuu uuuu uuuu uuuu
C1RX1B2	0378	Receive Buffer 1 Byte 3								Receive Buffer 1 Byte 2								uuuu uuuu uuuu uuuu
C1RX1B3	037A	Receive Buffer 1 Byte 5								Receive Buffer 1 Byte 4								uuuu uuuu uuuu uuuu
C1RX1B4	037C	Receive Buffer 1 Byte 7								Receive Buffer 1 Byte 6								uuuu uuuu uuuu uuuu
C1RX1CON	037E	—	—	—	—	—	—	—	—	RXFUL	—	—	—	RXRTRRO	FILHIT<2:0>			0000 0000 0000 0000
C1RX0SID	0380	—	—	—	Receive Buffer 0 Standard Identifier <10:0>											SRR	RXIDE	000u uuuu uuuu uuuu
C1RX0EID	0382	—	—	—	—	Receive Buffer 0 Extended Identifier <17:6>												0000 uuuu uuuu uuuu
C1RX0DLC	0384	Receive Buffer 0 Extended Identifier <5:0>						RXRTR	RXRB1	—	—	—	RXRB0	DLC<3:0>				uuuu uuuu 000u uuuu
C1RX0B1	0386	Receive Buffer 0 Byte 1								Receive Buffer 0 Byte 0								uuuu uuuu uuuu uuuu
C1RX0B2	0388	Receive Buffer 0 Byte 3								Receive Buffer 0 Byte 2								uuuu uuuu uuuu uuuu
C1RX0B3	038A	Receive Buffer 0 Byte 5								Receive Buffer 0 Byte 4								uuuu uuuu uuuu uuuu
C1RX0B4	038C	Receive Buffer 0 Byte 7								Receive Buffer 0 Byte 6								uuuu uuuu uuuu uuuu
C1RX0CON	038E	—	—	—	—	—	—	—	—	RXFUL	—	—	—	RXRTRRO	DBEN	JTOFF	FILHIT0	0000 0000 0000 0000
C1CTRL	0390	CANCAP	—	CSIDL	ABAT	CANCKS	REQOP<2:0>			OPMODE<2:0>			—	ICODE<2:0>			—	0000 0100 1000 0000
C1CFG1	0392	—	—	—	—	—	—	—	—	SJW<1:0>		BRP<5:0>						0000 0000 0000 0000
C1CFG2	0394	—	WAKFIL	—	—	—	SEG2PH<2:0>			SEG2PHTS	SAM	SEG1PH<2:0>			PRSEG<2:0>			0u00 0uuu uuuu uuuu
C1INTF	0396	RX0OVR	RX1OVR	TXBO	TXEP	RXEP	TXWAR	RXWAR	EWARN	IVRIF	WAKIF	ERRIF	TX2IF	TX1IF	TX0IF	RX1IF	RX0IF	0000 0000 0000 0000
C1INTE	0398	—	—	—	—	—	—	—	—	IVRIE	WAKIE	ERRIE	TX2IE	TX1IE	TX0IE	RX1E	RX0IE	0000 0000 0000 0000
C1EC	039A	Transmit Error Count Register								Receive Error Count Register								0000 0000 0000 0000

Legend: u = uninitialized bit; — = unimplemented bit, read as '0'

Note 1: Refer to the *"dsPIC30F Family Reference Manual"* (DS70046) for descriptions of register bit fields.

Downloaded from Arrow.com.

TABLE 17-2: CAN2 REGISTER MAP(1)

SFR Name	Addr.	Bit 15	Bit 14	Bit 13	Bit 12	Bit 11	Bit 10	Bit 9	Bit 8	Bit 7	Bit 6	Bit 5	Bit 4	Bit 3	Bit 2	Bit 1	Bit 0	Reset State
C2RXF0SID	03C0	—	—	—	Receive Acceptance Filter 0 Standard Identifier <10:0>											—	EXIDE	000u uuuu uuuu uu0u
C2RXF0EIDH	03C2	—	—	—	—	Receive Acceptance Filter 0 Extended Identifier <17:6>												0000 uuuu uuuu uuuu
C2RXF0EIDL	03C4	Receive Acceptance Filter 0 Extended Identifier <5:0>						—	—	—	—	—	—	—	—	—	—	uuuu uu00 0000 0000
C2RXF1SID	03C8	—	—	—	Receive Acceptance Filter 1 Standard Identifier <10:0>											—	EXIDE	000u uuuu uuuu uu0u
C2RXF1EIDH	03CA	—	—	—	—	Receive Acceptance Filter 1 Extended Identifier <17:6>												0000 uuuu uuuu uuuu
C2RXF1EIDL	03CC	Receive Acceptance Filter 1 Extended Identifier <5:0>						—	—	—	—	—	—	—	—	—	—	uuuu uu00 0000 0000
C2RXF2SID	03D0	—	—	—	Receive Acceptance Filter 2 Standard Identifier <10:0>											—	EXIDE	000u uuuu uuuu uu0u
C2RXF2EIDH	03D2	—	—	—	—	Receive Acceptance Filter 2 Extended Identifier <17:6>												0000 uuuu uuuu uuuu
C2RXF2EIDL	03D4	Receive Acceptance Filter 2 Extended Identifier <5:0>						—	—	—	—	—	—	—	—	—	—	uuuu uu00 0000 0000
C2RXF3SID	03D8	—	—	—	Receive Acceptance Filter 3 Standard Identifier <10:0>											—	EXIDE	000u uuuu uuuu uu0u
C2RXF3EIDH	03DA	—	—	—	—	Receive Acceptance Filter 3 Extended Identifier <17:6>												0000 uuuu uuuu uuuu
C2RXF3EIDL	03DC	Receive Acceptance Filter 3 Extended Identifier <5:0>						—	—	—	—	—	—	—	—	—	—	uuuu uu00 0000 0000
C2RXF4SID	03E0	—	—	—	Receive Acceptance Filter 4 Standard Identifier <10:0>											—	EXIDE	000u uuuu uuuu uu0u
C2RXF4EIDH	03E2	—	—	—	—	Receive Acceptance Filter 4 Extended Identifier <17:6>												0000 uuuu uuuu uuuu
C2RXF4EIDL	03E4	Receive Acceptance Filter 4 Extended Identifier <5:0>						—	—	—	—	—	—	—	—	—	—	uuuu uu00 0000 0000
C2RXF5SID	03E8	—	—	—	Receive Acceptance Filter 5 Standard Identifier <10:0>											—	EXIDE	000u uuuu uuuu uu0u
C2RXF5EIDH	03EA	—	—	—	—	Receive Acceptance Filter 5 Extended Identifier <17:6>												0000 uuuu uuuu uuuu
C2RXF5EIDL	03EC	Receive Acceptance Filter 5 Extended Identifier <5:0>						—	—	—	—	—	—	—	—	—	—	uuuu uu00 0000 0000
C2RXM0SID	03F0	—	—	—	Receive Acceptance Mask 0 Standard Identifier <10:0>											—	MIDE	000u uuuu uuuu uu0u
C2RXM0EIDH	03F2	—	—	—	—	Receive Acceptance Mask 0 Extended Identifier <17:6>												0000 uuuu uuuu uuuu
C2RXM0EIDL	03F4	Receive Acceptance Mask 0 Extended Identifier <5:0>						—	—	—	—	—	—	—	—	—	—	uuuu uu00 0000 0000
C2RXM1SID	03F8	—	—	—	Receive Acceptance Mask 1 Standard Identifier <10:0>											—	MIDE	000u uuuu uuuu uu0u
C2RXM1EIDH	03FA	—	—	—	—	Receive Acceptance Mask 1 Extended Identifier <17:6>												0000 uuuu uuuu uuuu
C2RXM1EIDL	03FC	Receive Acceptance Mask 1 Extended Identifier <5:0>						—	—	—	—	—	—	—	—	—	—	uuuu uu00 0000 0000
C2TX2SID	0400	Transmit Buffer 2 Standard Identifier <10:6>					—	—	—	Transmit Buffer 2 Standard Identifier <5:0>						SRR	TXIDE	uuuu u000 uuuu uuuu
C2TX2EID	0402	Transmit Buffer 2 Extended Identifier <17:14>				—	—	—	—	Transmit Buffer 2 Extended Identifier <13:6>								uuuu 0000 uuuu uuuu
C2TX2DLC	0404	Transmit Buffer 2 Extended Identifier <5:0>						TXRTR	TXRB1	TXRB0	DLC<3:0>				—	—	—	uuuu uuuu uuuu u000
C2TX2B1	0406	Transmit Buffer 2 Byte 1								Transmit Buffer 2 Byte 0								uuuu uuuu uuuu uuuu
C2TX2B2	0408	Transmit Buffer 2 Byte 3								Transmit Buffer 2 Byte 2								uuuu uuuu uuuu uuuu
C2TX2B3	040A	Transmit Buffer 2 Byte 5								Transmit Buffer 2 Byte 4								uuuu uuuu uuuu uuuu
C2TX2B4	040C	Transmit Buffer 2 Byte 7								Transmit Buffer 2 Byte 6								uuuu uuuu uuuu uuuu
C2TX2CON	040E	—	—	—	—	—	—	—	—	—	TXABT	TXLARB	TXERR	TXREQ	—	TXPRI<1:0>		0000 0000 0000 0000
C2TX1SID	0410	Transmit Buffer 1 Standard Identifier <10:6>					—	—	—	Transmit Buffer 1 Standard Identifier <5:0>						SRR	TXIDE	uuuu u000 uuuu uuuu
C2TX1EID	0412	Transmit Buffer 1 Extended Identifier <17:14>				—	—	—	—	Transmit Buffer 1 Extended Identifier <13:6>								uuuu 0000 uuuu uuuu
C2TX1DLC	0414	Transmit Buffer 1 Extended Identifier <5:0>						TXRTR	TXRB1	TXRB0	DLC<3:0>				—	—	—	uuuu uuuu uuuu u000

Legend: u = uninitialized bit; — = unimplemented bit, read as '0'

Note 1: Refer to the *"dsPIC30F Family Reference Manual"* (DS70046) for descriptions of register bit fields.

© 2011 Microchip Technology Inc.

Downloaded from Arrow.com.

TABLE 17-2: CAN2 REGISTER MAP[1] (CONTINUED)

SFR Name	Addr.	Bit 15	Bit 14	Bit 13	Bit 12	Bit 11	Bit 10	Bit 9	Bit 8	Bit 7	Bit 6	Bit 5	Bit 4	Bit 3	Bit 2	Bit 1	Bit 0	Reset State
C2TX1B1	0416	Transmit Buffer 1 Byte 1								Transmit Buffer 1 Byte 0								uuuu uuuu uuuu uuuu
C2TX1B2	0418	Transmit Buffer 1 Byte 3								Transmit Buffer 1 Byte 2								uuuu uuuu uuuu uuuu
C2TX1B3	041A	Transmit Buffer 1 Byte 5								Transmit Buffer 1 Byte 4								uuuu uuuu uuuu uuuu
C2TX1B4	041C	Transmit Buffer 1 Byte 7								Transmit Buffer 1 Byte 6								uuuu uuuu uuuu uuuu
C2TX1CON	041E	—	—	—	—	—	—	—	—	—	TXABT	TXLARB	TXERR	TXREQ	—	TXPRI<1:0>		0000 0000 0000 0000
C2TX0SID	0420	Transmit Buffer 0 Standard Identifier <10:6>					—	—	—	Transmit Buffer 0 Standard Identifier <5:0>						SRR	TXIDE	uuuu u000 uuuu uuuu
C2TX0EID	0422	Transmit Buffer 0 Extended Identifier <17:14>				—	—	—	—	Transmit Buffer 0 Extended Identifier <13:6>								uuuu 0000 uuuu uuuu
C2TX0DLC	0424	Transmit Buffer 0 Extended Identifier <5:0>						TXRTR	TXRB1	TXRB0	DLC<3:0>				—	—	—	uuuu uuuu uuuu u000
C2TX0B1	0426	Transmit Buffer 0 Byte 1								Transmit Buffer 0 Byte 0								uuuu uuuu uuuu uuuu
C2TX0B2	0428	Transmit Buffer 0 Byte 3								Transmit Buffer 0 Byte 2								uuuu uuuu uuuu uuuu
C2TX0B3	042A	Transmit Buffer 0 Byte 5								Transmit Buffer 0 Byte 4								uuuu uuuu uuuu uuuu
C2TX0B4	042C	Transmit Buffer 0 Byte 7								Transmit Buffer 0 Byte 6								uuuu uuuu uuuu uuuu
C2TX0CON	042E	—	—	—	—	—	—	—	—	—	TXABT	TXLARB	TXERR	TXREQ	—	TXPRI<1:0>		0000 0000 0000 0000
C2RX1SID	0430	—	—	—	Receive Buffer 1 Standard Identifier <10:0>											SRR	RXIDE	000u uuuu uuuu uuuu
C2RX1EID	0432	—	—	—	—	Receive Buffer 1 Extended Identifier <17:6>												0000 uuuu uuuu uuuu
C2RX1DLC	0434	Receive Buffer 1 Extended Identifier <5:0>						RXRTR	RXRB1	—	—	—	RXRB0	DLC<3:0>				uuuu uuuu 000u uuuu
C2RX1B1	0436	Receive Buffer 1 Byte 1								Receive Buffer 1 Byte 0								uuuu uuuu uuuu uuuu
C2RX1B2	0438	Receive Buffer 1 Byte 3								Receive Buffer 1 Byte 2								uuuu uuuu uuuu uuuu
C2RX1B3	043A	Receive Buffer 1 Byte 5								Receive Buffer 1 Byte 4								uuuu uuuu uuuu uuuu
C2RX1B4	043C	Receive Buffer 1 Byte 7								Receive Buffer 1 Byte 6								uuuu uuuu uuuu uuuu
C2RX1CON	043E	—	—	—	—	—	—	—	—	RXFUL	—	—	—	RXRTRRO	FILHIT<2:0>			0000 0000 0000 0000
C2RX0SID	0440	—	—	—	Receive Buffer 0 Standard Identifier <10:0>											SRR	RXIDE	000u uuuu uuuu uuuu
C2RX0EID	0442	—	—	—	—	Receive Buffer 0 Extended Identifier <17:6>												0000 uuuu uuuu uuuu
C2RX0DLC	0444	Receive Buffer 0 Extended Identifier <5:0>						RXRTR	RXRB1	—	—	—	RXRB0	DLC<3:0>				uuuu uuuu 000u uuuu
C2RX0B1	0446	Receive Buffer 0 Byte 1								Receive Buffer 0 Byte 0								uuuu uuuu uuuu uuuu
C2RX0B2	0448	Receive Buffer 0 Byte 3								Receive Buffer 0 Byte 2								uuuu uuuu uuuu uuuu
C2RX0B3	044A	Receive Buffer 0 Byte 5								Receive Buffer 0 Byte 4								uuuu uuuu uuuu uuuu
C2RX0B4	044C	Receive Buffer 0 Byte 7								Receive Buffer 0 Byte 6								uuuu uuuu uuuu uuuu
C2RX0CON	044E	—	—	—	—	—	—	—	—	RXFUL	—	—	—	RXRTRRO	DBEN	JTOFF	FILHIT0	0000 0000 0000 0000
C2CTRL	0450	CANCAP	—	CSIDLE	ABAT	CANCKS	REQOP<2:0>			OPMODE<2:0>			—	ICODE<2:0>			—	0000 0100 1000 0000
C2CFG1	0452	—	—	—	—	—	—	—	—	SJW<1:0>		BRP<5:0>						0000 0000 0000 0000
C2CFG2	0454	—	WAKFIL	—	—	—	SEG2PH<2:0>			SEG2PHTS	SAM	SEG1PH<2:0>			PRSEG<2:0>			0u00 0uuu uuuu uuuu
C2INTF	0456	RX0OVR	RX1OVR	TXBO	TXEP	RXEP	TXWAR	RXWAR	EWARN	IVRIF	WAKIF	ERRIF	TX2IF	TX1IF	TX0IF	RX1IF	RX0IF	0000 0000 0000 0000
C2INTE	0458	—	—	—	—	—	—	—	—	IVRIE	WAKIE	ERRIE	TX2IE	TX1IE	TX0IE	RX1E	RX0IE	0000 0000 0000 0000
C2EC	045A	Transmit Error Count Register								Receive Error Count Register								0000 0000 0000 0000

Legend: u = uninitialized bit; — = unimplemented bit, read as '0'

Note 1: Refer to the *"dsPIC30F Family Reference Manual"* (DS70046) for descriptions of register bit fields.

© 2011 Microchip Technology Inc.

Downloaded from Arrow.com.

NOTES:

© 2011 Microchip Technology Inc.

Downloaded from Arrow.com.

18.0 DATA CONVERTER INTERFACE (DCI) MODULE

Note: This data sheet summarizes features of this group of dsPIC30F devices and is not intended to be a complete reference source. For more information on the CPU, peripherals, register descriptions and general device functionality, refer to the "*dsPIC30F Family Reference Manual*" (DS70046).

18.1 Module Introduction

The dsPIC30F Data Converter Interface (DCI) module allows simple interfacing of devices, such as audio coder/decoders (Codecs), ADC and DAC. The following interfaces are supported:

- Framed Synchronous Serial Transfer (Single or Multi-Channel)
- Inter-IC Sound (I^2S) Interface
- AC-Link Compliant mode

The DCI module provides the following general features:

- Programmable word size up to 16 bits
- Support for up to 16 time slots, for a maximum frame size of 256 bits
- Data buffering for up to 4 samples without CPU overhead

18.2 Module I/O Pins

There are four I/O pins associated with the module. When enabled, the module controls the data direction of each of the four pins.

18.2.1 CSCK PIN

The CSCK pin provides the serial clock for the DCI module. The CSCK pin may be configured as an input or output using the CSCKD control bit in the DCICON1 SFR. When configured as an output, the serial clock is provided by the dsPIC30F. When configured as an input, the serial clock must be provided by an external device.

18.2.2 CSDO PIN

The serial data output (CSDO) pin is configured as an output only pin when the module is enabled. The CSDO pin drives the serial bus whenever data is to be transmitted. The CSDO pin is tri-stated or driven to '0' during CSCK periods when data is not transmitted, depending on the state of the CSDOM control bit. This allows other devices to place data on the serial bus during transmission periods not used by the DCI module.

18.2.3 CSDI PIN

The serial data input (CSDI) pin is configured as an input only pin when the module is enabled.

18.2.3.1 COFS PIN

The Codec Frame Synchronization (COFS) pin is used to synchronize data transfers that occur on the CSDO and CSDI pins. The COFS pin may be configured as an input or an output. The data direction for the COFS pin is determined by the COFSD control bit in the DCICON1 register.

The DCI module accesses the shadow registers while the CPU is in the process of accessing the memory mapped buffer registers.

18.2.4 BUFFER DATA ALIGNMENT

Data values are always stored left justified in the buffers since most Codec data is represented as a signed 2's complement fractional number. If the received word length is less than 16 bits, the unused LSbs in the receive buffer registers are set to '0' by the module. If the transmitted word length is less than 16 bits, the unused LSbs in the transmit buffer register are ignored by the module. The word length setup is described in subsequent sections of this document.

18.2.5 TRANSMIT/RECEIVE SHIFT REGISTER

The DCI module has a 16-bit shift register for shifting serial data in and out of the module. Data is shifted in/out of the shift register MSb first, since audio PCM data is transmitted in signed 2's complement format.

18.2.6 DCI BUFFER CONTROL

The DCI module contains a buffer control unit for transferring data between the shadow buffer memory and the serial shift register. The buffer control unit is a simple 2-bit address counter that points to word locations in the shadow buffer memory. For the receive memory space (high address portion of DCI buffer memory), the address counter is concatenated with a '0' in the MSb location to form a 3-bit address. For the transmit memory space (high portion of DCI buffer memory), the address counter is concatenated with a '1' in the MSb location.

Note: The DCI buffer control unit always accesses the same relative location in the transmit and receive buffers, so only one address counter is provided.

Downloaded from Arrow.com.

FIGURE 18-1: DCI MODULE BLOCK DIAGRAM

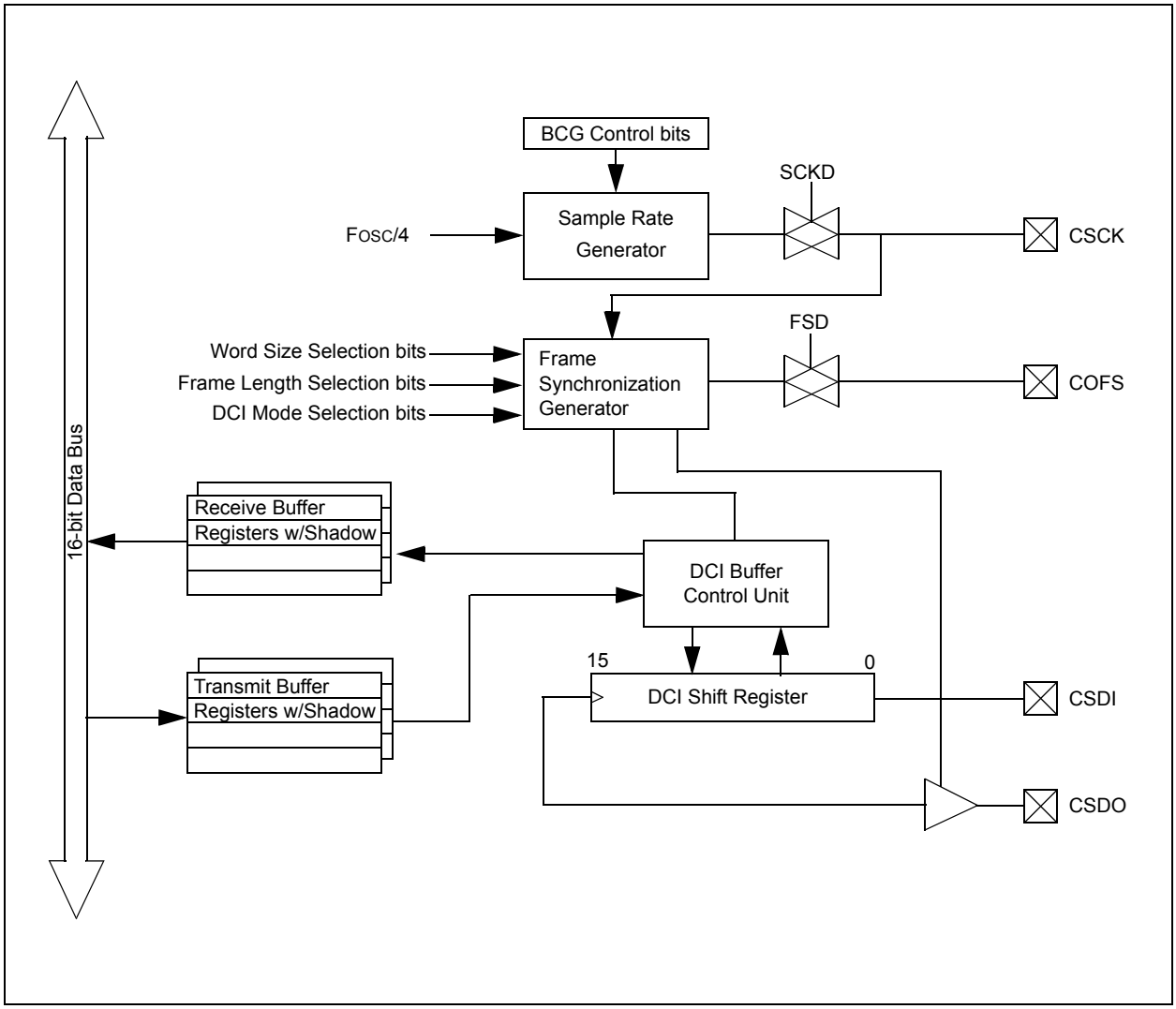

© 2011 Microchip Technology Inc.

Downloaded from Arrow.com.

18.3 DCI Module Operation

18.3.1 MODULE ENABLE

The DCI module is enabled or disabled by setting/clearing the DCIEN control bit in the DCICON1 SFR. Clearing the DCIEN control bit has the effect of resetting the module. In particular, all counters associated with CSCK generation, frame sync, and the DCI buffer control unit are reset.

The DCI clocks are shutdown when the DCIEN bit is cleared.

When enabled, the DCI controls the data direction for the four I/O pins associated with the module. The Port, LAT and TRIS register values for these I/O pins are overridden by the DCI module when the DCIEN bit is set.

It is also possible to override the CSCK pin separately when the bit clock generator is enabled. This permits the bit clock generator to operate without enabling the rest of the DCI module.

18.3.2 WORD SIZE SELECTION BITS

The WS<3:0> word size selection bits in the DCICON2 SFR determine the number of bits in each DCI data word. Essentially, the WS<3:0> bits determine the counting period for a 4-bit counter clocked from the CSCK signal.

Any data length, up to 16-bits, may be selected. The value loaded into the WS<3:0> bits is one less the desired word length. For example, a 16-bit data word size is selected when WS<3:0> = `1111`.

Note:	These WS<3:0> control bits are used only in the Multi-Channel and I^2S modes. These bits have no effect in AC-Link mode since the data slot sizes are fixed by the protocol.

18.3.3 FRAME SYNC GENERATOR

The frame sync generator (COFSG) is a 4-bit counter that sets the frame length in data words. The frame sync generator is incremented each time the word size counter is reset (refer to **Section 18.3.2 "Word Size Selection Bits"**). The period for the frame synchronization generator is set by writing the COFSG<3:0> control bits in the DCICON2 SFR. The COFSG period in clock cycles is determined by the following formula:

EQUATION 18-1: COFSG PERIOD

$$\text{Frame Length} = \text{Word Length} \bullet (\text{FSG Value} + 1)$$

Frame lengths, up to 16 data words, may be selected. The frame length in CSCK periods can vary up to a maximum of 256 depending on the word size that is selected.

Note:	The COFSG control bits will have no effect in AC-Link mode since the frame length is set to 256 CSCK periods by the protocol.

18.3.4 FRAME SYNC MODE CONTROL BITS

The type of frame sync signal is selected using the Frame Synchronization mode control bits (COFSM<1:0>) in the DCICON1 SFR. The following operating modes can be selected:

- Multi-Channel mode
- I^2S mode
- AC-Link mode (16-bit)
- AC-Link mode (20-bit)

The operation of the COFSM control bits depends on whether the DCI module generates the frame sync signal as a master device, or receives the frame sync signal as a slave device.

The master device in a DSP/Codec pair is the device that generates the frame sync signal. The frame sync signal initiates data transfers on the CSDI and CSDO pins and usually has the same frequency as the data sample rate (COFS).

The DCI module is a frame sync master if the COFSD control bit is cleared and is a frame sync slave if the COFSD control bit is set.

18.3.5 MASTER FRAME SYNC OPERATION

When the DCI module is operating as a frame sync master device (COFSD = `0`), the COFSM mode bits determine the type of frame sync pulse that is generated by the frame sync generator logic.

A new COFS signal is generated when the frame sync generator resets to '`0`'.

In the Multi-Channel mode, the frame sync pulse is driven high for the CSCK period to initiate a data transfer. The number of CSCK cycles between successive frame sync pulses will depend on the word size and frame sync generator control bits. A timing diagram for the frame sync signal in Multi-Channel mode is shown in Figure 18-2.

In the AC-Link mode of operation, the frame sync signal has a fixed period and duty cycle. The AC-Link frame sync signal is high for 16 CSCK cycles and is low for 240 CSCK cycles. A timing diagram with the timing details at the start of an AC-Link frame is shown in Figure 18-3.

Downloaded from Arrow.com.

In the I^{2}S mode, a frame sync signal having a 50% duty cycle is generated. The period of the I^{2}S frame sync signal in CSCK cycles is determined by the word size and frame sync generator control bits. A new I^{2}S data transfer boundary is marked by a high-to-low or a low-to-high transition edge on the COFS pin.

18.3.6 SLAVE FRAME SYNC OPERATION

When the DCI module is operating as a frame sync slave (COFSD = 1), data transfers are controlled by the Codec device attached to the DCI module. The COFSM control bits control how the DCI module responds to incoming COFS signals.

In the Multi-Channel mode, a new data frame transfer will begin one CSCK cycle after the COFS pin is sampled high (see Figure 18-2). The pulse on the COFS pin resets the frame sync generator logic.

In the I^{2}S mode, a new data word will be transferred one CSCK cycle after a low-to-high or a high-to-low transition is sampled on the COFS pin. A rising or falling edge on the COFS pin resets the frame sync generator logic.

In the AC-Link mode, the tag slot and subsequent data slots for the next frame will be transferred one CSCK cycle after the COFS pin is sampled high.

The COFSG and WS bits must be configured to provide the proper frame length when the module is operating in the Slave mode. Once a valid frame sync pulse has been sampled by the module on the COFS pin, an entire data frame transfer will take place. The module will not respond to further frame sync pulses until the data frame transfer has completed.

FIGURE 18-2: FRAME SYNC TIMING, MULTI-CHANNEL MODE

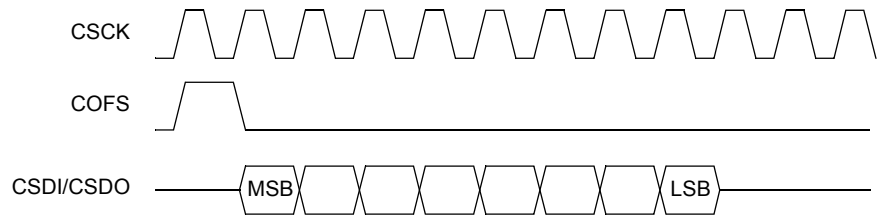

FIGURE 18-3: FRAME SYNC TIMING, AC-LINK START OF FRAME

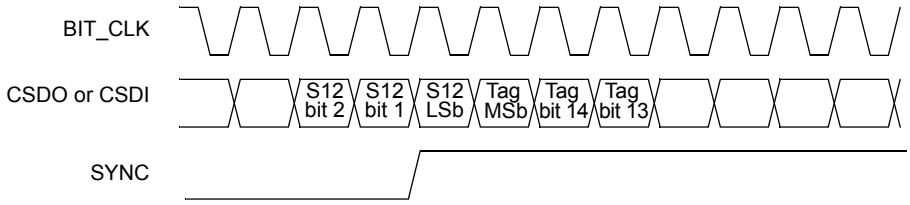

FIGURE 18-4: I^{2}S INTERFACE FRAME SYNC TIMING

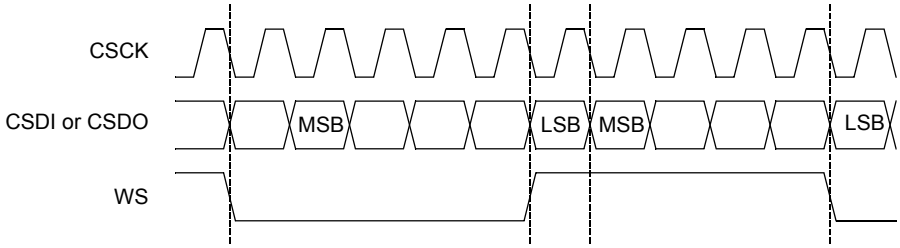

Note: A 5-bit transfer is shown here for illustration purposes. The I^{2}S protocol does not specify word length – this will be system dependent.

© 2011 Microchip Technology Inc.

Downloaded from Arrow.com.

18.3.7 BIT CLOCK GENERATOR

The DCI module has a dedicated 12-bit time base that produces the bit clock. The bit clock rate (period) is set by writing a non-zero 12-bit value to the BCG<11:0> control bits in the DCICON3 SFR.

When the BCG<11:0> bits are set to zero, the bit clock will be disabled. If the BCG<11:0> bits are set to a non-zero value, the bit clock generator is enabled. These bits should be set to '0' and the CSCKD bit set to '1' if the serial clock for the DCI is received from an external device.

The formula for the bit clock frequency is given in Equation 18-2.

EQUATION 18-2: BIT CLOCK FREQUENCY

$$F_{BCK} = \frac{F_{CY}}{2 \bullet (BCG + 1)}$$

The required bit clock frequency will be determined by the system sampling rate and frame size. Typical bit clock frequencies range from 16x to 512x the converter sample rate depending on the data converter and the communication protocol that is used.

To achieve bit clock frequencies associated with common audio sampling rates, the user will need to select a crystal frequency that has an 'even' binary value. Examples of such crystal frequencies are listed in Table 18-1.

TABLE 18-1: DEVICE FREQUENCIES FOR COMMON CODEC CSCK FREQUENCIES

Fs (kHz)	FCSCK/Fs	FCSCK (MHz)(1)	FOSC (MHz)	PLL	FCY (MIPS)	BCG(2)
8	256	2.048	8.192	4	8.192	1
12	256	3.072	6.144	8	12.288	1
32	32	1.024	8.192	8	16.384	7
44.1	32	1.4112	5.6448	8	11.2896	3
48	64	3.072	6.144	16	24.576	3

Note 1: When the CSCK signal is applied externally (CSCKD = 1), the external clock high and low times must meet the device timing requirements.

2: When the CSCK signal is applied externally (CSCKD = 1), the BCG<11:0> bits have no effect on the operation of the DCI module.

Downloaded from Arrow.com.

18.3.8 SAMPLE CLOCK EDGE CONTROL BIT

The sample clock edge (CSCKE) control bit determines the sampling edge for the CSCK signal. If the CSCK bit is cleared (default), data will be sampled on the falling edge of the CSCK signal. The AC-Link protocols and most Multi-Channel formats require that data be sampled on the falling edge of the CSCK signal. If the CSCK bit is set, data will be sampled on the rising edge of CSCK. The I^2S protocol requires that data be sampled on the rising edge of the CSCK signal.

18.3.9 DATA JUSTIFICATION CONTROL BIT

In most applications, the data transfer begins one CSCK cycle after the COFS signal is sampled active. This is the default configuration of the DCI module. An alternate data alignment can be selected by setting the DJST control bit in the DCICON1 SFR. When DJST = 1, data transfers will begin during the same CSCK cycle when the COFS signal is sampled active.

18.3.10 TRANSMIT SLOT ENABLE BITS

The TSCON SFR has control bits that are used to enable up to 16 time slots for transmission. These control bits are the TSE<15:0> bits. The size of each time slot is determined by the WS<3:0> word size selection bits and can vary up to 16 bits.

If a transmit time slot is enabled via one of the TSE bits (TSEx = 1), the contents of the current transmit shadow buffer location will be loaded into the CSDO Shift register and the DCI buffer control unit is incremented to point to the next location.

During an unused transmit time slot, the CSDO pin will drive '0's or will be tri-stated during all disabled time slots depending on the state of the CSDOM bit in the DCICON1 SFR.

The data frame size in bits is determined by the chosen data word size and the number of data word elements in the frame. If the chosen frame size has less than 16 elements, the additional slot enable bits will have no effect.

Each transmit data word is written to the 16-bit transmit buffer as left justified data. If the selected word size is less than 16 bits, then the LSbs of the transmit buffer memory will have no effect on the transmitted data. The user should write '0's to the unused LSbs of each transmit buffer location.

18.3.11 RECEIVE SLOT ENABLE BITS

The RSCON SFR contains control bits that are used to enable up to 16 time slots for reception. These control bits are the RSE<15:0> bits. The size of each receive time slot is determined by the WS<3:0> word size selection bits and can vary from 1 to 16 bits.

If a receive time slot is enabled via one of the RSE bits (RSEx = 1), the shift register contents will be written to the current DCI receive shadow buffer location and the buffer control unit will be incremented to point to the next buffer location.

Data is not packed in the receive memory buffer locations if the selected word size is less than 16 bits. Each received slot data word is stored in a separate 16-bit buffer location. Data is always stored in a left justified format in the receive memory buffer.

18.3.12 SLOT ENABLE BITS OPERATION WITH FRAME SYNC

The TSE and RSE control bits operate in concert with the DCI frame sync generator. In the Master mode, a COFS signal is generated whenever the frame sync generator is reset. In the Slave mode, the frame sync generator is reset whenever a COFS pulse is received.

The TSE and RSE control bits allow up to 16 consecutive time slots to be enabled for transmit or receive. After the last enabled time slot has been transmitted/received, the DCI will stop buffering data until the next occurring COFS pulse.

18.3.13 SYNCHRONOUS DATA TRANSFERS

The DCI buffer control unit will be incremented by one word location whenever a given time slot has been enabled for transmission or reception. In most cases, data input and output transfers will be synchronized, which means that a data sample is received for a given channel at the same time a data sample is transmitted. Therefore, the transmit and receive buffers will be filled with equal amounts of data when a DCI interrupt is generated.

In some cases, the amount of data transmitted and received during a data frame may not be equal. As an example, assume a two-word data frame is used. Furthermore, assume that data is only received during slot #0 but is transmitted during slot #0 and slot #1. In this case, the buffer control unit counter would be incremented twice during a data frame but only one receive register location would be filled with data.

© 2011 Microchip Technology Inc.

Downloaded from Arrow.com.

18.3.14 BUFFER LENGTH CONTROL

The amount of data that is buffered between interrupts is determined by the buffer length (BLEN<1:0>) control bits in the DCICON1 SFR. The size of the transmit and receive buffers may be varied from 1 to 4 data words using the BLEN control bits. The BLEN control bits are compared to the current value of the DCI buffer control unit address counter. When the 2 LSbs of the DCI address counter match the BLEN<1:0> value, the buffer control unit will be reset to '0'. In addition, the contents of the receive shadow registers are transferred to the receive buffer registers and the contents of the transmit buffer registers are transferred to the transmit shadow registers.

18.3.15 BUFFER ALIGNMENT WITH DATA FRAMES

There is no direct coupling between the position of the AGU address pointer and the data frame boundaries. This means that there will be an implied assignment of each transmit and receive buffer that is a function of the BLEN control bits and the number of enabled data slots via the TSE and RSE control bits.

As an example, assume that a 4-word data frame is chosen and that we want to transmit on all four time slots in the frame. This configuration would be established by setting the TSE0, TSE1, TSE2 and TSE3 control bits in the TSCON SFR. With this module setup, the TXBUF0 register would naturally be assigned to slot #0, the TXBUF1 register would naturally be assigned to slot #1, and so on.

Note:	When more than four time slots are active within a data frame, the user code must keep track of which time slots are to be read/written at each interrupt. In some cases, the alignment between transmit/receive buffers and their respective slot assignments could be lost. Examples of such cases include an emulation breakpoint or a hardware trap. In these situations, the user should poll the SLOT status bits to determine what data should be loaded into the buffer registers to resynchronize the software with the DCI module.

18.3.16 TRANSMIT STATUS BITS

There are two transmit status bits in the DCISTAT SFR.

The TMPTY bit is set when the contents of the transmit buffer registers are transferred to the transmit shadow registers. The TMPTY bit may be polled in software to determine when the transmit buffer registers may be written. The TMPTY bit is cleared automatically by the hardware when a write to one of the four transmit buffers occurs.

The TUNF bit is read only and indicates that a transmit underflow has occurred for at least one of the transmit buffer registers that is in use. The TUNF bit is set at the time the transmit buffer registers are transferred to the transmit shadow registers. The TUNF status bit is cleared automatically when the buffer register that underflowed is written by the CPU.

Note:	The transmit status bits only indicate status for buffer locations that are used by the module. If the buffer length is set to less than four words, for example, the unused buffer locations will not affect the transmit status bits.

18.3.17 RECEIVE STATUS BITS

There are two receive status bits in the DCISTAT SFR.

The RFUL status bit is read only and indicates that new data is available in the receive buffers. The RFUL bit is cleared automatically when all receive buffers in use have been read by the CPU.

The ROV status bit is read only and indicates that a receive overflow has occurred for at least one of the receive buffer locations. A receive overflow occurs when the buffer location is not read by the CPU before new data is transferred from the shadow registers. The ROV status bit is cleared automatically when the buffer register that caused the overflow is read by the CPU.

When a receive overflow occurs for a specific buffer location, the old contents of the buffer are overwritten.

Note:	The receive status bits only indicate status for buffer locations that are used by the module. If the buffer length is set to less than four words, for example, the unused buffer locations will not affect the transmit status bits.

Downloaded from Arrow.com.

18.3.18 SLOT STATUS BITS

The SLOT<3:0> status bits in the DCISTAT SFR indicate the current active time slot. These bits will correspond to the value of the frame sync generator counter. The user may poll these status bits in software when a DCI interrupt occurs to determine what time slot data was last received and which time slot data should be loaded into the TXBUF registers.

18.3.19 CSDO MODE BIT

The CSDOM control bit controls the behavior of the CSDO pin during unused transmit slots. A given transmit time slot is unused if it's corresponding TSEx bit in the TSCON SFR is cleared.

If the CSDOM bit is cleared (default), the CSDO pin will be low during unused time slot periods. This mode will be used when there are only two devices attached to the serial bus.

If the CSDOM bit is set, the CSDO pin will be tri-stated during unused time slot periods. This mode allows multiple devices to share the same CSDO line in a multichannel application. Each device on the CSDO line is configured so that it will only transmit data during specific time slots. No two devices will transmit data during the same time slot.

18.3.20 DIGITAL LOOPBACK MODE

Digital Loopback mode is enabled by setting the DLOOP control bit in the DCICON1 SFR. When the DLOOP bit is set, the module internally connects the CSDO signal to CSDI. The actual data input on the CSDI I/O pin will be ignored in Digital Loopback mode.

18.3.21 UNDERFLOW MODE CONTROL BIT

When an underflow occurs, one of two actions may occur depending on the state of the Underflow mode (UNFM) control bit in the DCICON1 SFR. If the UNFM bit is cleared (default), the module will transmit '0's on the CSDO pin during the active time slot for the buffer location. In this Operating mode, the Codec device attached to the DCI module will simply be fed digital 'silence'. If the UNFM control bit is set, the module will transmit the last data written to the buffer location. This Operating mode permits the user to send continuous data to the Codec device without consuming CPU overhead.

18.4 DCI Module Interrupts

The frequency of DCI module interrupts is dependent on the BLEN<1:0> control bits in the DCICON2 SFR. An interrupt to the CPU is generated each time the set buffer length has been reached and a shadow register transfer takes place. A shadow register transfer is defined as the time when the previously written TXBUF values are transferred to the transmit shadow registers and new received values in the receive shadow registers are transferred into the RXBUF registers.

18.5 DCI Module Operation During CPU Sleep and Idle Modes

18.5.1 DCI MODULE OPERATION DURING CPU SLEEP MODE

The DCI module has the ability to operate while in Sleep mode and wake the CPU when the CSCK signal is supplied by an external device (CSCKD = 1). The DCI module will generate an asynchronous interrupt when a DCI buffer transfer has completed and the CPU is in Sleep mode.

18.5.2 DCI MODULE OPERATION DURING CPU IDLE MODE

If the DCISIDL control bit is cleared (default), the module will continue to operate normally even in Idle mode. If the DCISIDL bit is set, the module will halt when Idle mode is asserted.

18.6 AC-Link Mode Operation

The AC-Link protocol is a 256-bit frame with one 16-bit data slot, followed by twelve 20-bit data slots. The DCI module has two Operating modes for the AC-Link protocol. These Operating modes are selected by the COFSM<1:0> control bits in the DCICON1 SFR. The first AC-Link mode is called '16-bit AC-Link mode' and is selected by setting COFSM<1:0> = 10. The second AC-Link mode is called '20-bit AC-Link mode' and is selected by setting COFSM<1:0> = 11.

18.6.1 16-BIT AC-LINK MODE

In the 16-bit AC-Link mode, data word lengths are restricted to 16 bits. Note that this restriction only affects the 20-bit data time slots of the AC-Link protocol. For received time slots, the incoming data is simply truncated to 16 bits. For outgoing time slots, the 4 LSbs of the data word are set to '0' by the module. This truncation of the time slots limits the ADC and DAC data to 16 bits, but permits proper data alignment in the TXBUF and RXBUF registers. Each RXBUF and TXBUF register will contain one data time slot value.

18.6.2 20-BIT AC-LINK MODE

The 20-bit AC-Link mode allows all bits in the data time slots to be transmitted and received but does not maintain data alignment in the TXBUF and RXBUF registers.

The 20-bit AC-Link mode functions similar to the Multi-Channel mode of the DCI module, except for the duty cycle of the frame synchronization signal. The AC-Link frame synchronization signal should remain high for 16 CSCK cycles and should be low for the following 240 cycles.

© 2011 Microchip Technology Inc.

Downloaded from Arrow.com.

The 20-bit mode treats each 256-bit AC-Link frame as sixteen, 16-bit time slots. In the 20-bit AC-Link mode, the module operates as if COFSG<3:0> = `1111` and WS<3:0> = `1111`. The data alignment for 20-bit data slots is ignored. For example, an entire AC-Link data frame can be transmitted and received in a packed fashion by setting all bits in the TSCON and RSCON SFRs. Since the total available buffer length is 64 bits, it would take 4 consecutive interrupts to transfer the AC-Link frame. The application software must keep track of the current AC-Link frame segment.

18.7 I^{2}S Mode Operation

The DCI module is configured for I^{2}S mode by writing a value of '`01`' to the COFSM<1:0> control bits in the DCICON1 SFR. When operating in the I^{2}S mode, the DCI module will generate frame synchronization signals with a 50% duty cycle. Each edge of the frame synchronization signal marks the boundary of a new data word transfer.

The user must also select the frame length and data word size using the COFSG and WS control bits in the DCICON2 SFR.

18.7.1 I^{2}S FRAME AND DATA WORD LENGTH SELECTION

The WS and COFSG control bits are set to produce the period for one half of an I^{2}S data frame. That is, the frame length is the total number of CSCK cycles required for a left or a right data word transfer.

The BLEN bits must be set for the desired buffer length. Setting BLEN<1:0> = `01` will produce a CPU interrupt, once per I^{2}S frame.

18.7.2 I^{2}S DATA JUSTIFICATION

As per the I^{2}S specification, a data word transfer will, by default, begin one CSCK cycle after a transition of the WS signal. A MSb left justified option can be selected using the DJST control bit in the DCICON1 SFR.

If DJST = `1`, the I^{2}S data transfers will be MSb left justified. The MSb of the data word will be presented on the CSDO pin during the same CSCK cycle as the rising or falling edge of the COFS signal. The CSDO pin is tri-stated after the data word has been sent.

Downloaded from Arrow.com.

TABLE 18-2: DCI REGISTER MAP(1)

SFR Name	Addr.	Bit 15	Bit 14	Bit 13	Bit 12	Bit 11	Bit 10	Bit 9	Bit 8	Bit 7	Bit 6	Bit 5	Bit 4	Bit 3	Bit 2	Bit 1	Bit 0	Reset State
DCICON1	0240	DCIEN	—	DCISIDL	—	DLOOP	CSCKD	CSCKE	COFSD	UNFM	CSDOM	DJST	—	—	—	COFSM1	COFSM0	0000 0000 0000 0000
DCICON2	0242	—	—	—	—	BLEN1	BLEN0	—	COFSG<3:0>				—	WS<3:0>				0000 0000 0000 0000
DCICON3	0244	—	—	—	—	BCG<11:0>												0000 0000 0000 0000
DCISTAT	0246	—	—	—	—	SLOT3	SLOT2	SLOT1	SLOT0	—	—	—	—	ROV	RFUL	TUNF	TMPTY	0000 0000 0000 0000
TSCON	0248	TSE15	TSE14	TSE13	TSE12	TSE11	TSE10	TSE9	TSE8	TSE7	TSE6	TSE5	TSE4	TSE3	TSE2	TSE1	TSE0	0000 0000 0000 0000
RSCON	024C	RSE15	RSE14	RSE13	RSE12	RSE11	RSE10	RSE9	RSE8	RSE7	RSE6	RSE5	RSE4	RSE3	RSE2	RSE1	RSE0	0000 0000 0000 0000
RXBUF0	0250	Receive Buffer 0 Data Register																0000 0000 0000 0000
RXBUF1	0252	Receive Buffer 1 Data Register																0000 0000 0000 0000
RXBUF2	0254	Receive Buffer 2 Data Register																0000 0000 0000 0000
RXBUF3	0256	Receive Buffer 3 Data Register																0000 0000 0000 0000
TXBUF0	0258	Transmit Buffer 0 Data Register																0000 0000 0000 0000
TXBUF1	025A	Transmit Buffer 1 Data Register																0000 0000 0000 0000
TXBUF2	025C	Transmit Buffer 2 Data Register																0000 0000 0000 0000
TXBUF3	025E	Transmit Buffer 3 Data Register																0000 0000 0000 0000

Legend: — = unimplemented bit, read as '0'

Note 1: Refer to the *"dsPIC30F Family Reference Manual"* (DS70046) for descriptions of register bit fields.

© 2011 Microchip Technology Inc.

Downloaded from Arrow.com.

19.0 12-BIT ANALOG-TO-DIGITAL CONVERTER (ADC) MODULE

Note: This data sheet summarizes features of this group of dsPIC30F devices and is not intended to be a complete reference source. For more information on the CPU, peripherals, register descriptions and general device functionality, refer to the "*dsPIC30F Family Reference Manual*" (DS70046).

The 12-bit Analog-to-Digital Converter (ADC) allows conversion of an analog input signal to a 12-bit digital number. This module is based on a Successive Approximation Register (SAR) architecture and provides a maximum sampling rate of 200 ksps. The ADC module has up to 16 analog inputs which are multiplexed into a sample and hold amplifier. The output of the sample and hold is the input into the converter which generates the result. The analog reference voltage is software selectable to either the device supply voltage (AVDD/AVSS) or the voltage level on the (VREF+/VREF-) pin. The ADC has a unique feature of being able to operate while the device is in Sleep mode with RC oscillator selection.

The ADC module has six 16-bit registers:

- ADC Control Register 1 (ADCON1)
- ADC Control Register 2 (ADCON2)
- ADC Control Register 3 (ADCON3)
- ADC Input Select Register (ADCHS)
- ADC Port Configuration Register (ADPCFG)
- ADC Input Scan Selection Register (ADCSSL)

The ADCON1, ADCON2 and ADCON3 registers control the operation of the ADC module. The ADCHS register selects the input channels to be converted. The ADPCFG register configures the port pins as analog inputs or as digital I/O. The ADCSSL register selects inputs for scanning.

Note: The SSRC<2:0>, ASAM, SMPI<3:0>, BUFM and ALTS bits, as well as the ADCON3 and ADCSSL registers, must not be written to while ADON = `1`. This would lead to indeterminate results.

The block diagram of the 12-bit ADC module is shown in Figure 19-1.

FIGURE 19-1: 12-BIT ADC FUNCTIONAL BLOCK DIAGRAM

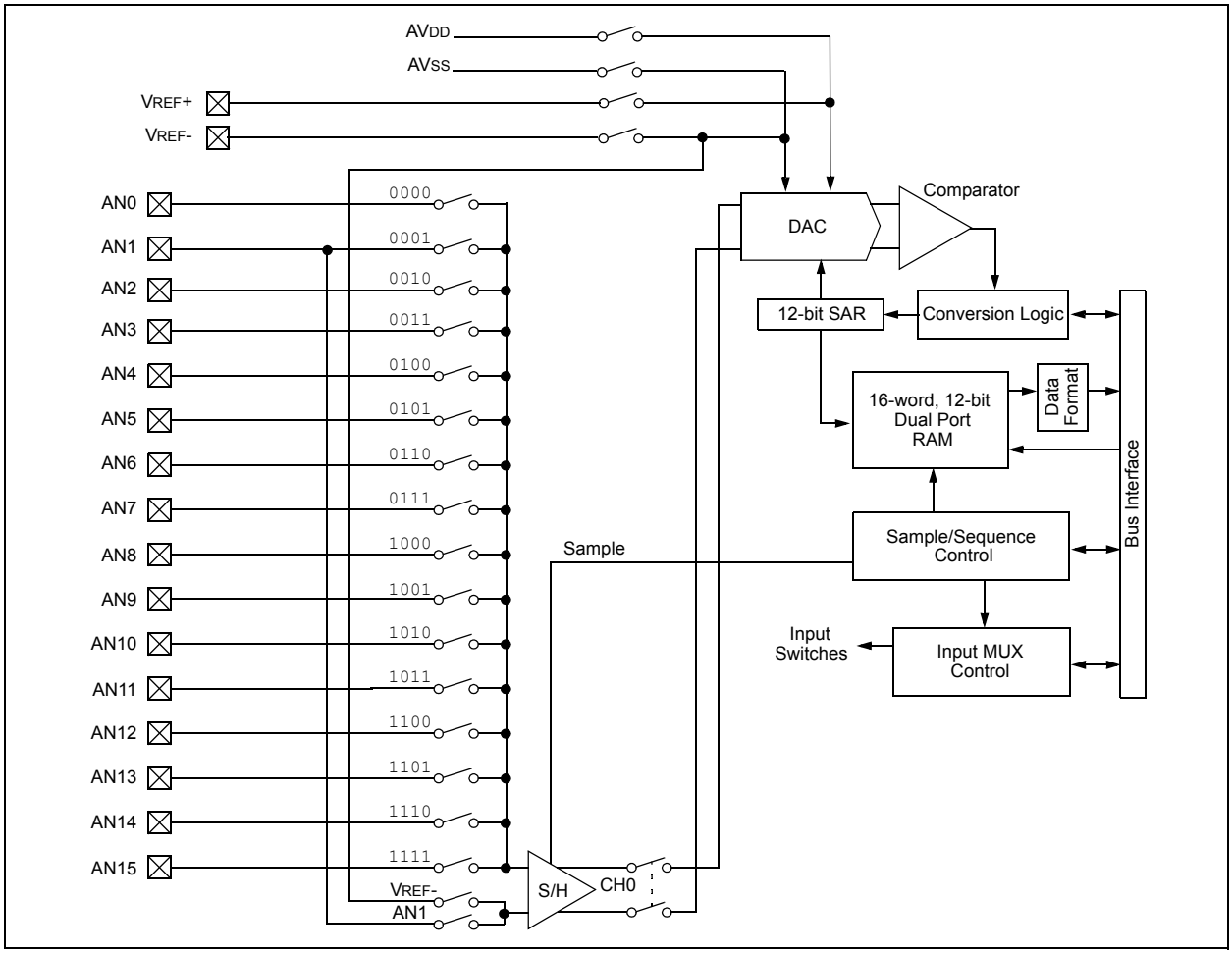

Downloaded from Arrow.com.

19.1 ADC Result Buffer

The module contains a 16-word dual port read only buffer, called ADCBUF0...ADCBUFF, to buffer the ADC results. The RAM is 12 bits wide but the data obtained is represented in one of four different 16-bit data formats. The contents of the sixteen ADC Result Buffer registers, ADCBUF0 through ADCBUFF, cannot be written by user software.

19.2 Conversion Operation

After the ADC module has been configured, the sample acquisition is started by setting the SAMP bit. Various sources, such as a programmable bit, timer time-outs and external events, will terminate acquisition and start a conversion. When the A/D conversion is complete, the result is loaded into ADCBUF0...ADCBUFF, and the DONE bit and the ADC interrupt flag ADIF are set after the number of samples specified by the SMPI bit. The ADC module can be configured for different interrupt rates as described in **Section 19.3 "Selecting the Conversion Sequence"**.

Use the following steps to perform an Analog-to-Digital conversion:

1. Configure the ADC module:
   a) Configure the analog pins, voltage reference and digital I/O.
   b) Select the ADC input channels.
   c) Select the ADC conversion clock.
   d) Select the ADC conversion trigger.
   e) Turn on the ADC module.
2. Configure ADC interrupt (if required):
   a) Clear the ADIF bit.
   b) Select the ADC interrupt priority.
3. Start sampling.
4. Wait the required acquisition time.
5. Trigger acquisition end, start conversion:
6. Wait for ADC conversion to complete, by either:
   - Waiting for the ADC interrupt, or
   - Waiting for the DONE bit to get set.
7. Read ADC result buffer, clear ADIF if required.

19.3 Selecting the Conversion Sequence

Several groups of control bits select the sequence in which the ADC connects inputs to the sample/hold channel, converts a channel, writes the buffer memory and generates interrupts.

The sequence is controlled by the sampling clocks.

The SMPI bits select the number of acquisition/conversion sequences that would be performed before an interrupt occurs. This can vary from 1 sample per interrupt to 16 samples per interrupt.

The BUFM bit will split the 16-word results buffer into two 8-word groups. Writing to the 8-word buffers will be alternated on each interrupt event.

Use of the BUFM bit will depend on how much time is available for the moving of the buffers after the interrupt.

If the processor can quickly unload a full buffer within the time it takes to acquire and convert one channel, the BUFM bit can be '0' and up to 16 conversions (corresponding to the 16 input channels) may be done per interrupt. The processor will have one acquisition and conversion time to move the sixteen conversions.

If the processor cannot unload the buffer within the acquisition and conversion time, the BUFM bit should be '1'. For example, if SMPI<3:0> (ADCON2<5:2>) = 0111, then eight conversions will be loaded into 1/2 of the buffer, following which an interrupt occurs. The next eight conversions will be loaded into the other 1/2 of the buffer. The processor will have the entire time between interrupts to move the eight conversions.

The ALTS bit can be used to alternate the inputs selected during the sampling sequence. The input multiplexer has two sets of sample inputs: MUX A and MUX B. If the ALTS bit is '0', only the MUX A inputs are selected for sampling. If the ALTS bit is '1' and SMPI<3:0> = 0000 on the first sample/convert sequence, the MUX A inputs are selected and, on the next acquire/convert sequence, the MUX B inputs are selected.

The CSCNA bit (ADCON2<10>) will allow the multiplexer input to be alternately scanned across a selected number of analog inputs for the MUX A group. The inputs are selected by the ADCSSL register. If a particular bit in the ADCSSL register is '1', the corresponding input is selected. The inputs are always scanned from lower to higher numbered inputs, starting after each interrupt. If the number of inputs selected is greater than the number of samples taken per interrupt, the higher numbered inputs are unused.

© 2011 Microchip Technology Inc.

Downloaded from Arrow.com.

19.4 Programming the Start of Conversion Trigger

The conversion trigger will terminate acquisition and start the requested conversions.

The SSRC<2:0> bits select the source of the conversion trigger. The SSRC bits provide for up to four alternate sources of conversion trigger.

When SSRC<2:0> = `000`, the conversion trigger is under software control. Clearing the SAMP bit will cause the conversion trigger event after ~11 TAD.

When SSRC<2:0> = `111` (Auto-Start mode), the conversion trigger is under ADC clock control. The SAMC bits select the number of ADC clocks between the start of acquisition and the start of conversion. This provides the fastest conversion rates on multiple channels. SAMC must always be at least one clock cycle.

Other trigger sources can come from timer modules or external interrupts.

19.5 Aborting a Conversion

Clearing the ADON bit during a conversion will abort the current conversion and stop the sampling sequencing until the next sampling trigger. The ADCBUF will not be updated with the partially completed ADC conversion sample. That is, the ADCBUF will continue to contain the value of the last completed conversion (or the last value written to the ADCBUF register).

If the clearing of the ADON bit coincides with an auto-start, the clearing has a higher priority and a new conversion will not start.

19.6 Selecting the ADC Conversion Clock

The ADC conversion requires 14 TAD. The source of the ADC conversion clock is software selected, using a 6-bit counter. There are 64 possible options for TAD.

EQUATION 19-1: ADC CONVERSION CLOCK

$$T_{AD} = T_{CY} * (0.5*(ADCS<5:0> + 1))$$

The internal RC oscillator is selected by setting the ADRC bit.

For correct ADC conversions, the ADC conversion clock (TAD) must be selected to ensure a minimum TAD time of 334 nsec (for VDD = 5V). Refer to **Section 23.0 "Electrical Characteristics"** for minimum TAD under other operating conditions.

Example 19-1 shows a sample calculation for the ADCS<5:0> bits, assuming a device operating speed of 30 MIPS.

EXAMPLE 19-1: ADC CONVERSION CLOCK AND SAMPLING RATE CALCULATION

Minimum T_{AD} = 334 nsec

T_{CY} = 33 .33 nsec (30 MIPS)

$$ADCS<5:0> = 2\ \frac{T_{AD}}{T_{CY}} - 1$$

$$= 2 \bullet \frac{334\text{ nsec}}{33.33\text{ nsec}} - 1$$

$$= 19.04$$

Therefore,

Set ADCS<5:0> = 19

$$\textit{Actual } T_{AD} = \frac{T_{CY}}{2}(ADCS<5:0> + 1)$$

$$= \frac{33.33\text{ nsec}}{2}(19 + 1)$$

$$= 334\text{ nsec}$$

If SSRC<2:0> = '111' and SAMC<4:0> = '00001'

Since,

Sampling Time = Acquisition Time + Conversion Time

$= 1\ T_{AD} + 14\ T_{AD}$

= 15 x 334 nsec

Therefore,

$$\textit{Sampling Rate} = \frac{1}{(15 \text{ x } 334\text{ nsec})}$$

= ~200 kHz

Downloaded from Arrow.com.

19.7 ADC Speeds

The dsPIC30F 12-bit ADC specifications permit a maximum of 200 ksps sampling rate. The table below summarizes the conversion speeds for the dsPIC30F 12-bit ADC and the required operating conditions.

TABLE 19-1: 12-BIT ADC EXTENDED CONVERSION RATES

dsPIC30F 12-bit ADC Conversion Rates						
Speed	**TAD Minimum**	**Sampling Time Min**	**R_S Max**	**VDD**	**Temperature**	**Channels Configuration**
Up to 200 ksps(1)	334 ns	1 TAD	2.5 kΩ	4.5V to 5.5V	-40°C to +85°C	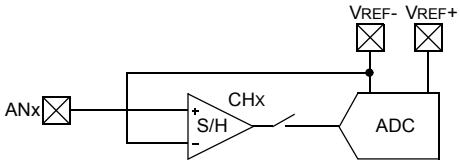
Up to 100 ksps	668 ns	1 TAD	2.5 kΩ	3.0V to 5.5V	-40°C to +125°C	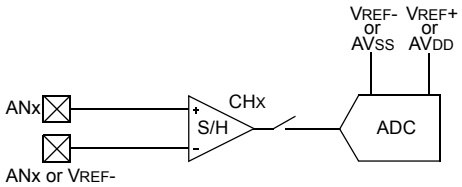

Note 1: External VREF- and VREF+ pins must be used for correct operation. See Figure 19-2 for recommended circuit.

© 2011 Microchip Technology Inc.

Downloaded from Arrow.com.

The following figure depicts the recommended circuit for the conversion rates above 100 ksps. The dsPIC30F6014A is shown as an example.

FIGURE 19-2: ADC VOLTAGE REFERENCE SCHEMATIC

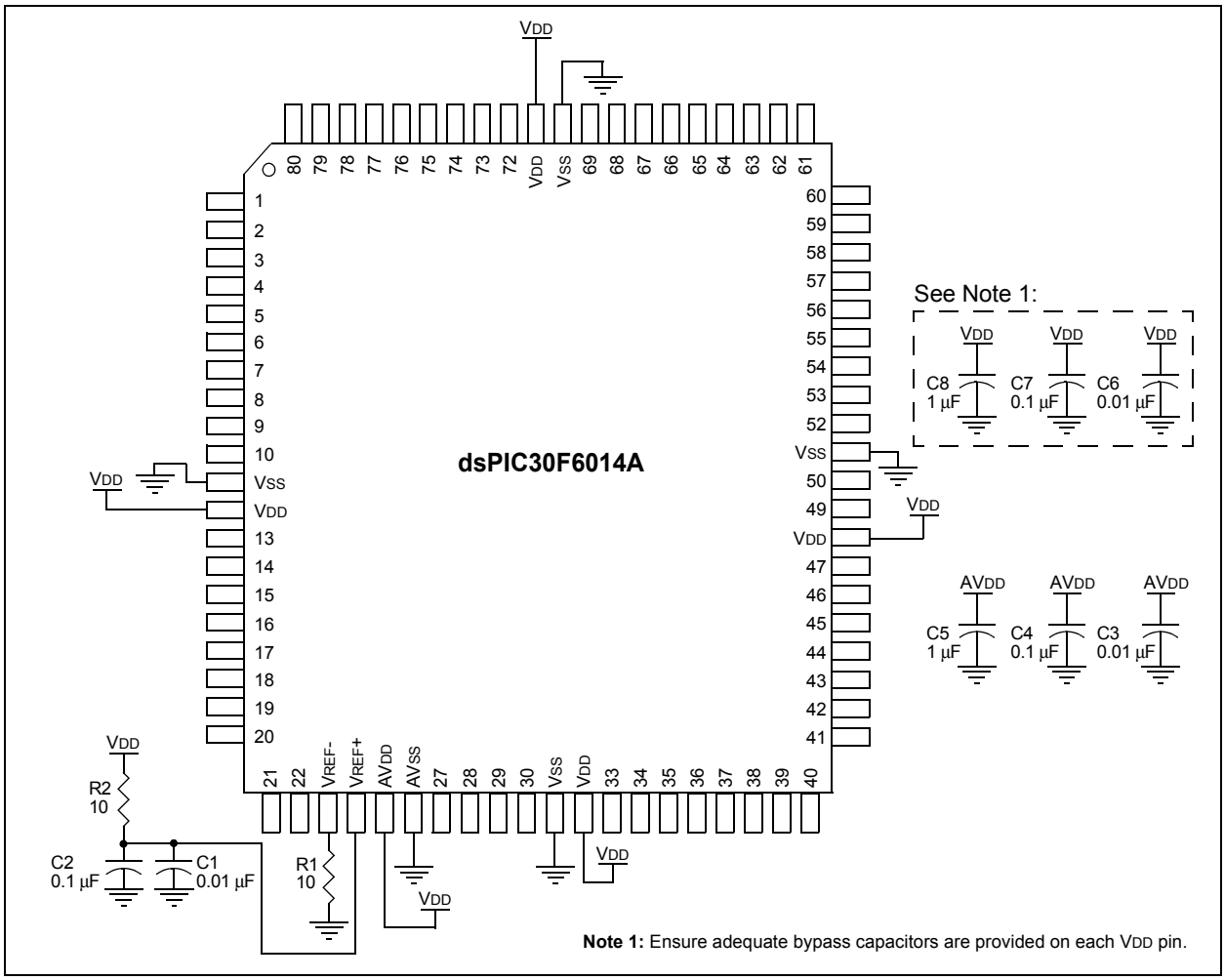

The configuration procedures below give the required setup values for the conversion speeds above 100 ksps.

19.7.1 200 KSPS CONFIGURATION GUIDELINE

The following configuration items are required to achieve a 200 ksps conversion rate.

- Comply with conditions provided in Table 19-2.
- Connect external VREF+ and VREF- pins following the recommended circuit as shown in Figure 19-2.
- Set SSRC<2.0> = `111` in the ADCON1 register to enable the auto convert option.
- Enable automatic sampling by setting the ASAM control bit in the ADCON1 register.
- Write the SMPI<3.0> control bits in the ADCON2 register for the desired number of conversions between interrupts.
- Configure the ADC clock period to be:

$$\frac{1}{(14 + 1) \times 200{,}000} = 334 \text{ ns}$$

  by writing to the ADCS<5:0> control bits in the ADCON3 register.
- Configure the sampling time to be 1 TAD by writing: SAMC<4:0> = `00001`.

The following figure shows the timing diagram of the ADC running at 200 ksps. The TAD selection in conjunction with the guidelines described above allows a conversion speed of 200 ksps. See Example 19-1 for code example.

Downloaded from Arrow.com.

FIGURE 19-3: CONVERTING 1 CHANNEL AT 200 KSPS, AUTO-SAMPLE START, 1 TAD SAMPLING TIME

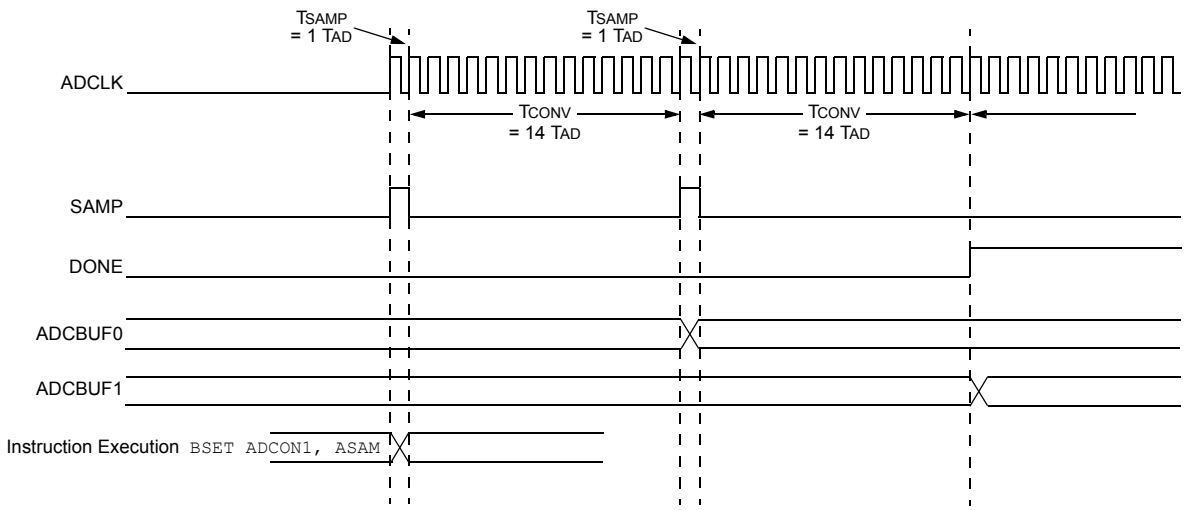

19.8 ADC Acquisition Requirements

The analog input model of the 12-bit ADC is shown in Figure 19-4. The total sampling time for the ADC is a function of the internal amplifier settling time and the holding capacitor charge time.

For the ADC to meet its specified accuracy, the charge holding capacitor (CHOLD) must be allowed to fully charge to the voltage level on the analog input pin. The source impedance (RS), the interconnect impedance (RIC) and the internal sampling switch (RSS) impedance combine to directly affect the time required to charge the capacitor CHOLD. The combined impedance of the analog sources must therefore be small enough to fully charge the holding capacitor within the chosen sample time. To minimize the effects of pin leakage currents on the accuracy of the ADC, the maximum recommended source impedance, RS, is 2.5 kΩ After the analog input channel is selected (changed), this sampling function must be completed prior to starting the conversion. The internal holding capacitor will be in a discharged state prior to each sample operation.

FIGURE 19-4: 12-BIT ADC ANALOG INPUT MODEL

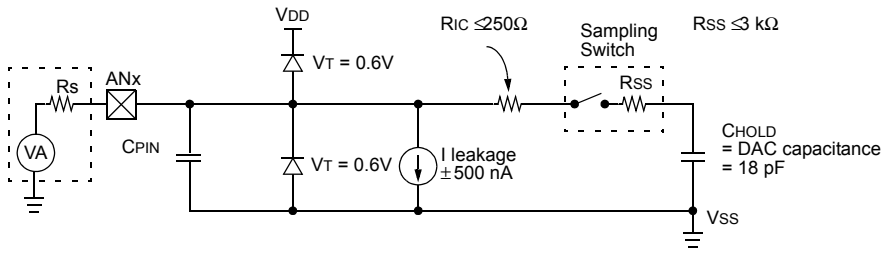

Legend:	CPIN	= input capacitance
	VT	= threshold voltage
	I leakage	= leakage current at the pin due to various junctions
	RIC	= interconnect resistance
	RSS	= sampling switch resistance
	CHOLD	= sample/hold capacitance (from DAC)

Note: CPIN value depends on device package and is not tested. Effect of CPIN negligible if Rs ≤2.5 kΩ

© 2011 Microchip Technology Inc.

Downloaded from Arrow.com.

19.9 Module Power-down Modes

The module has 2 internal Power modes.

When the ADON bit is '1', the module is in Active mode; it is fully powered and functional.

When ADON is '0', the module is in Off mode. The digital and analog portions of the circuit are disabled for maximum current savings.

In order to return to the Active mode from Off mode, the user must wait for the ADC circuitry to stabilize.

19.10 ADC Operation During CPU Sleep and Idle Modes

19.10.1 ADC OPERATION DURING CPU SLEEP MODE

When the device enters Sleep mode, all clock sources to the module are shutdown and stay at logic '0'.

If Sleep occurs in the middle of a conversion, the conversion is aborted. The converter will not continue with a partially completed conversion on exit from Sleep mode.

Register contents are not affected by the device entering or leaving Sleep mode.

The ADC module can operate during Sleep mode if the ADC clock source is set to RC (ADRC = 1). When the RC clock source is selected, the ADC module waits one instruction cycle before starting the conversion. This allows the SLEEP instruction to be executed which eliminates all digital switching noise from the conversion. When the conversion is complete, the CONV bit will be cleared and the result loaded into the ADCBUF register.

If the ADC interrupt is enabled, the device will wake-up from Sleep. If the ADC interrupt is not enabled, the ADC module will then be turned off, although the ADON bit will remain set.

19.10.2 ADC OPERATION DURING CPU IDLE MODE

The ADSIDL bit selects if the module will stop on Idle or continue on Idle. If ADSIDL = 0, the module will continue operation on assertion of Idle mode. If ADSIDL = 1, the module will stop on Idle.

19.11 Effects of a Reset

A device Reset forces all registers to their Reset state. This forces the ADC module to be turned off, and any conversion and sampling sequence is aborted. The values that are in the ADCBUF registers are not modified. The ADC Result register will contain unknown data after a Power-on Reset.

19.12 Output Formats

The ADC result is 12 bits wide. The data buffer RAM is also 12 bits wide. The 12-bit data can be read in one of four different formats. The FORM<1:0> bits select the format. Each of the output formats translates to a 16-bit result on the data bus.

FIGURE 19-5: ADC OUTPUT DATA FORMATS

RAM Contents:					d11	d10	d09	d08	d07	d06	d05	d04	d03	d02	d01	d00
Read to Bus:																
Signed Fractional	$\overline{d11}$	d10	d09	d08	d07	d06	d05	d04	d03	d02	d01	d00	0	0	0	0
Fractional	d11	d10	d09	d08	d07	d06	d05	d04	d03	d02	d01	d00	0	0	0	0
Signed Integer	$\overline{d11}$	$\overline{d11}$	$\overline{d11}$	$\overline{d11}$	$\overline{d11}$	d10	d09	d08	d07	d06	d05	d04	d03	d02	d01	d00
Integer	0	0	0	0	d11	d10	d09	d08	d07	d06	d05	d04	d03	d02	d01	d00

Downloaded from Arrow.com.

19.13 Configuring Analog Port Pins

The use of the ADPCFG and TRIS registers control the operation of the ADC port pins. The port pins that are desired as analog inputs must have their corresponding TRIS bit set (input). If the TRIS bit is cleared (output), the digital output level (V_{OH} or V_{OL}) will be converted.

The ADC operation is independent of the state of the CH0SA<3:0>/CH0SB<3:0> bits and the TRIS bits.

When reading the Port register, all pins configured as analog input channels will read as cleared.

Pins configured as digital inputs will not convert an analog input. Analog levels on any pin that is defined as a digital input (including the ANx pins) may cause the input buffer to consume current that exceeds the device specifications.

19.14 Connection Considerations

The analog inputs have diodes to V_{DD} and V_{SS} as ESD protection. This requires that the analog input be between V_{DD} and V_{SS}. If the input voltage exceeds this range by greater than 0.3V (either direction), one of the diodes becomes forward biased and it may damage the device if the input current specification is exceeded.

An external RC filter is sometimes added for anti-aliasing of the input signal. The R component should be selected to ensure that the sampling time requirements are satisfied. Any external components connected (via high-impedance) to an analog input pin (capacitor, zener diode, etc.) should have very little leakage current at the pin.

© 2011 Microchip Technology Inc.

Downloaded from Arrow.com.

TABLE 19-2: ADC REGISTER MAP(1)

SFR Name	Addr.	Bit 15	Bit 14	Bit 13	Bit 12	Bit 11	Bit 10	Bit 9	Bit 8	Bit 7	Bit 6	Bit 5	Bit 4	Bit 3	Bit 2	Bit 1	Bit 0	Reset State
ADCBUF0	0280	—	—	—	—	ADC Data Buffer 0												0000 uuuu uuuu uuuu
ADCBUF1	0282	—	—	—	—	ADC Data Buffer 1												0000 uuuu uuuu uuuu
ADCBUF2	0284	—	—	—	—	ADC Data Buffer 2												0000 uuuu uuuu uuuu
ADCBUF3	0286	—	—	—	—	ADC Data Buffer 3												0000 uuuu uuuu uuuu
ADCBUF4	0288	—	—	—	—	ADC Data Buffer 4												0000 uuuu uuuu uuuu
ADCBUF5	028A	—	—	—	—	ADC Data Buffer 5												0000 uuuu uuuu uuuu
ADCBUF6	028C	—	—	—	—	ADC Data Buffer 6												0000 uuuu uuuu uuuu
ADCBUF7	028E	—	—	—	—	ADC Data Buffer 7												0000 uuuu uuuu uuuu
ADCBUF8	0290	—	—	—	—	ADC Data Buffer 8												0000 uuuu uuuu uuuu
ADCBUF9	0292	—	—	—	—	ADC Data Buffer 9												0000 uuuu uuuu uuuu
ADCBUFA	0294	—	—	—	—	ADC Data Buffer 10												0000 uuuu uuuu uuuu
ADCBUFB	0296	—	—	—	—	ADC Data Buffer 11												0000 uuuu uuuu uuuu
ADCBUFC	0298	—	—	—	—	ADC Data Buffer 12												0000 uuuu uuuu uuuu
ADCBUFD	029A	—	—	—	—	ADC Data Buffer 13												0000 uuuu uuuu uuuu
ADCBUFE	029C	—	—	—	—	ADC Data Buffer 14												0000 uuuu uuuu uuuu
ADCBUFF	029E	—	—	—	—	ADC Data Buffer 15												0000 uuuu uuuu uuuu
ADCON1	02A0	ADON	—	ADSIDL	—	—	—	FORM<1:0>		SSRC<2:0>			—	—	ASAM	SAMP	DONE	0000 0000 0000 0000
ADCON2	02A2	VCFG<2:0>			—	—	CSCNA	—	—	BUFS	—	SMPI<3:0>				BUFM	ALTS	0000 0000 0000 0000
ADCON3	02A4	—	—	—	SAMC<4:0>					ADRC	—	ADCS<5:0>						0000 0000 0000 0000
ADCHS	02A6	—	—	—	CH0NB	CH0SB<3:0>				—	—	—	CH0NA	CH0SA<3:0>				0000 0000 0000 0000
ADPCFG	02A8	PCFG15	PCFG14	PCFG13	PCFG12	PCFG11	PCFG10	PCFG9	PCFG8	PCFG7	PCFG6	PCFG5	PCFG4	PCFG3	PCFG2	PCFG1	PCFG0	0000 0000 0000 0000
ADCSSL	02AA	CSSL15	CSSL14	CSSL13	CSSL12	CSSL11	CSSL10	CSSL9	CSSL8	CSSL7	CSSL6	CSSL5	CSSL4	CSSL3	CSSL2	CSSL1	CSSL0	0000 0000 0000 0000

Legend: u = uninitialized bit; — = unimplemented bit, read as '0'

Note 1: Refer to the *"dsPIC30F Family Reference Manual"* (DS70046) for descriptions of register bit fields.

© 2011 Microchip Technology Inc.

Downloaded from Arrow.com.

NOTES:

© 2011 Microchip Technology Inc.

Downloaded from Arrow.com.

20.0 SYSTEM INTEGRATION

Note: This data sheet summarizes features of this group of dsPIC30F devices and is not intended to be a complete reference source. For more information on the CPU, peripherals, register descriptions and general device functionality, refer to the "*dsPIC30F Family Reference Manual*" (DS70046). For more information on the device instruction set and programming, refer to the *"16-bit MCU and DSC Programmer's Reference Manual"* (DS70157).

There are several features intended to maximize system reliability, minimize cost through elimination of external components, provide power-saving operating modes and offer code protection:

- Oscillator Selection
- Reset
  - Power-on Reset (POR)
  - Power-up Timer (PWRT)
  - Oscillator Start-up Timer (OST)
  - Programmable Brown-out Reset (BOR)
- Watchdog Timer (WDT)
- Low Voltage Detect
- Power-Saving modes (Sleep and Idle)
- Code Protection
- Unit ID Locations
- In-Circuit Serial Programming (ICSP)

dsPIC30F devices have a Watchdog Timer, which is permanently enabled via the Configuration bits or can be software controlled. It runs off its own RC oscillator for added reliability. There are two timers that offer necessary delays on power-up. One is the Oscillator Start-up Timer (OST), intended to keep the chip in Reset until the crystal oscillator is stable. The other is the Power-up Timer (PWRT), which provides a delay on power-up only, designed to keep the part in Reset while the power supply stabilizes. With these two timers on-chip, most applications need no external Reset circuitry.

Sleep mode is designed to offer a very low-current Power-Down mode. The user can wake-up from Sleep through external Reset, Watchdog Timer Wake-up or through an interrupt. Several oscillator options are also made available to allow the part to fit a wide variety of applications. In the Idle mode, the clock sources are still active, but the CPU is shut-off. The RC oscillator option saves system cost, while the LP crystal option saves power.

20.1 Oscillator System Overview

The dsPIC30F oscillator system has the following modules and features:

- Various external and internal oscillator options as clock sources
- An on-chip PLL to boost internal operating frequency
- A clock switching mechanism between various clock sources
- Programmable clock postscaler for system power savings
- A Fail-Safe Clock Monitor (FSCM) that detects clock failure and takes fail-safe measures
- Oscillator Control register (OSCCON)
- Configuration bits for main oscillator selection

Configuration bits determine the clock source upon Power-on Reset (POR) and Brown-out Reset (BOR). Thereafter, the clock source can be changed between permissible clock sources. The OSCCON register controls the clock switching and reflects system clock related status bits.

Table 20-1 provides a summary of the dsPIC30F oscillator operating modes. A simplified diagram of the oscillator system is shown in Figure 20-1.

Downloaded from Arrow.com.

TABLE 20-1: OSCILLATOR OPERATING MODES

Oscillator Mode	Description
XTL	200 kHz-4 MHz crystal on OSC1:OSC2
XT	4 MHz-10 MHz crystal on OSC1:OSC2
XT w/PLL 4x	4 MHz-10 MHz crystal on OSC1:OSC2, 4x PLL enabled
XT w/PLL 8x	4 MHz-10 MHz crystal on OSC1:OSC2, 8x PLL enabled
XT w/PLL 16x	4 MHz-7.5 MHz crystal on OSC1:OSC2, 16x PLL enabled(1)
LP	32 kHz crystal on SOSCO:SOSCI(2)
HS	10 MHz-25 MHz crystal.
HS/2 w/PLL 4x	10 MHz-20 MHz crystal, divide by 2, 4x PLL enabled(3)
HS/2 w/PLL 8x	10 MHz-20 MHz crystal, divide by 2, 8x PLL enabled(3)
HS/2 w/PLL 16x	10 MHz-15 MHz crystal, divide by 2, 16x PLL enabled(1)
HS/3 w/PLL 4x	12 MHz-25 MHz crystal, divide by 3, 4x PLL enabled(4)
HS/3 w/PLL 8x	12 MHz-25 MHz crystal, divide by 3, 8x PLL enabled(4)
HS/3 w/PLL 16x	12 MHz-22.5 MHz crystal, divide by 3, 16x PLL enabled(1)(4)
EC	External clock input (0-40 MHz)
ECIO	External clock input (0-40 MHz), OSC2 pin is I/O
EC w/PLL 4x	External clock input (4-10 MHz), OSC2 pin is I/O, 4x PLL enabled
EC w/PLL 8x	External clock input (4-10 MHz), OSC2 pin is I/O, 8x PLL enabled
EC w/PLL 16x	External clock input (4-7.5 MHz), OSC2 pin is I/O, 16x PLL enabled(1)
ERC	External RC oscillator, OSC2 pin is FOSC/4 output(5)
ERCIO	External RC oscillator, OSC2 pin is I/O(5)
FRC	7.37 MHz internal RC oscillator
FRC w/PLL 4x	7.37 MHz internal RC oscillator, 4x PLL enabled
FRC w/PLL 8x	7.37 MHz internal RC oscillator, 8x PLL enabled
FRC w/PLL 16x	7.37 MHz internal RC oscillator, 16x PLL enabled
LPRC	512 kHz internal RC oscillator

Note 1: Any higher will violate device operating frequency range.
2: LP oscillator can be conveniently shared as system clock, as well as Real-Time Clock for Timer1.
3: Any higher will violate PLL input range.
4: Any lower will violate PLL input range.
5: Requires external R and C. Frequency operation up to 4 MHz.

© 2011 Microchip Technology Inc.

Downloaded from Arrow.com.

FIGURE 20-1: OSCILLATOR SYSTEM BLOCK DIAGRAM

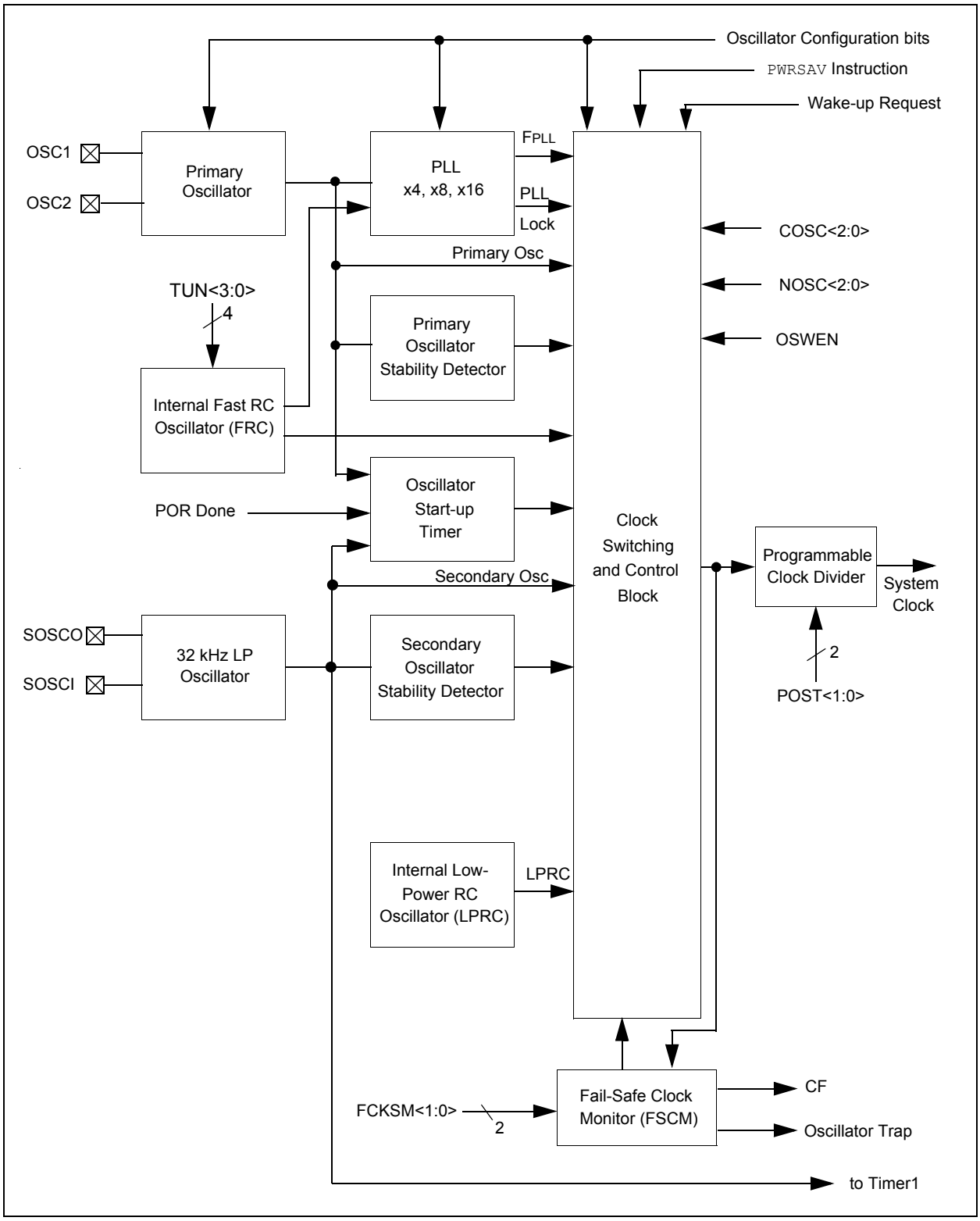

Downloaded from Arrow.com.

20.2 Oscillator Configurations

20.2.1 INITIAL CLOCK SOURCE SELECTION

While coming out of Power-on Reset or Brown-out Reset, the device selects its clock source based on:

a) FOS<2:0> Configuration bits that select one of four oscillator groups, and

b) FPR<4:0> Configuration bits that select the oscillator choices within the primary group.

The selection is as shown in Table 20-2.

TABLE 20-2: CONFIGURATION BIT VALUES FOR CLOCK SELECTION

Oscillator Mode	Oscillator Source	FOS<2:0>			FPR<4:0>					OSC2 Function
ECIO w/PLL 4x	PLL	1	1	1	0	1	1	0	1	I/O
ECIO w/PLL 8x	PLL	1	1	1	0	1	1	1	0	I/O
ECIO w/PLL 16x	PLL	1	1	1	0	1	1	1	1	I/O
FRC w/PLL 4x	PLL	1	1	1	0	0	0	0	1	I/O
FRC w/PLL 8x	PLL	1	1	1	0	1	0	1	0	I/O
FRC w/PLL 16x	PLL	1	1	1	0	0	0	1	1	I/O
XT w/PLL 4x	PLL	1	1	1	0	0	1	0	1	OSC2
XT w/PLL 8x	PLL	1	1	1	0	0	1	1	0	OSC2
XT w/PLL 16x	PLL	1	1	1	0	0	1	1	1	OSC2
HS/2 w/PLL 4x	PLL	1	1	1	1	0	0	0	1	OSC2
HS/2 w/PLL 8x	PLL	1	1	1	1	0	0	1	0	OSC2
HS/2 w/PLL 16x	PLL	1	1	1	1	0	0	1	1	OSC2
HS/3 w/PLL 4x	PLL	1	1	1	1	0	1	0	1	OSC2
HS/3 w/PLL 8x	PLL	1	1	1	1	0	1	1	0	OSC2
HS/3 w/PLL 16x	PLL	1	1	1	1	0	1	1	1	OSC2
ECIO	External	0	1	1	0	1	1	0	0	I/O
XT	External	0	1	1	0	0	1	0	0	OSC2
HS	External	0	1	1	0	0	0	1	0	OSC2
EC	External	0	1	1	0	1	0	1	1	CLKOUT
ERC	External	0	1	1	0	1	0	0	1	CLKOUT
ERCIO	External	0	1	1	0	1	0	0	0	I/O
XTL	External	0	1	1	0	0	0	0	0	OSC2
LP	Secondary	0	0	0	x	x	x	x	x	**(Note 1, 2)**
FRC	Internal FRC	0	0	1	x	x	x	x	x	**(Note 1, 2)**
LPRC	Internal LPRC	0	1	0	x	x	x	x	x	**(Note 1, 2)**

Note 1: OSC2 pin function is determined by FPR<4:0>.

2: OSC1 pin cannot be used as an I/O pin even if the secondary oscillator or an internal clock source is selected at all times.

© 2011 Microchip Technology Inc.

Downloaded from Arrow.com.

20.2.2 OSCILLATOR START-UP TIMER (OST)

In order to ensure that a crystal oscillator (or ceramic resonator) has started and stabilized, an Oscillator Start-up Timer is included. It is a simple 10-bit counter that counts 1024 TOSC cycles before releasing the oscillator clock to the rest of the system. The time-out period is designated as TOST. The TOST time is involved every time the oscillator has to restart (i.e., on POR, BOR and wake-up from Sleep). The Oscillator Start-up Timer is applied to the LP, XT, XTL and HS Oscillator modes (upon wake-up from Sleep, POR and BOR) for the primary oscillator.

20.2.3 LP OSCILLATOR CONTROL

Enabling the LP oscillator is controlled with two elements:

- The current oscillator group bits COSC<2:0>
- The LPOSCEN bit (OSCCON register)

The LP oscillator is ON (even during Sleep mode) if LPOSCEN = 1. The LP oscillator is the device clock if:

- COSC<2:0> = 000 (LP selected as main oscillator) and
- LPOSCEN = 1

Keeping the LP oscillator ON at all times allows for a fast switch to the 32 kHz system clock for lower power operation. Returning to the faster main oscillator will still require a start-up time.

20.2.4 PHASE LOCKED LOOP (PLL)

The PLL multiplies the clock which is generated by the primary oscillator. The PLL is selectable to have either gains of x4, x8 and x16. Input and output frequency ranges are summarized in Table 20-3.

TABLE 20-3: PLL FREQUENCY RANGE

Fin	PLL Multiplier	Fout
4 MHz-10 MHz	x4	16 MHz-40 MHz
4 MHz-10 MHz	x8	32 MHz-80 MHz
4 MHz-7.5 MHz	x16	64 MHz-120 MHz

The PLL features a lock output, which is asserted when the PLL enters a phase locked state. Should the loop fall out of lock (e.g., due to noise), the lock signal will be rescinded. The state of this signal is reflected in the read-only LOCK bit in the OSCCON register.

20.2.5 FAST RC OSCILLATOR (FRC)

The FRC oscillator is a fast (7.37 MHz ±2% nominal) internal RC oscillator. This oscillator is intended to provide reasonable device operating speeds without the use of an external crystal, ceramic resonator or RC network. The FRC oscillator can be used with the PLL to obtain higher clock frequencies.

The dsPIC30F operates from the FRC oscillator whenever the current oscillator selection control bits in the OSCCON register (OSCCON<14:12>) are set to '001'.

The 6-bit field specified by TUN<3:0> (OSCTUN<3:0>) allows the user to tune the internal fast RC oscillator (nominal 7.37 MHz). The user can tune the FRC oscillator within a range of ±6% in steps of 0.75% around the factory-calibrated setting (see Table 20-4).

> **Note:** OSCTUN functionality has been provided to help customers compensate for temperature effects on the FRC frequency over a wide range of temperatures. The tuning step size is an approximation and is neither characterized nor tested.

If OSCCON<14:12> are set to '111' and FPR<4:0> are set to '00101', '00110' or '00111', then a PLL multiplier of 4, 8 or 16 (respectively) is applied.

> **Note:** When a 16x PLL is used, the FRC oscillator must not be tuned to a frequency greater than 7.5 MHz.

TABLE 20-4: FRC TUNING

TUN<3:0> Bits	FRC Frequency
0111	+5.25%
0110	+4.50%
0101	+3.75%
0100	+3.00%
0011	+2.25%
0010	+1.50%
0001	+0.75%
0000	Center Frequency (oscillator is running at calibrated frequency)
1111	-0.75%
1110	-1.50%
1101	-2.25%
1100	-3.00%
1011	-3.75%
1010	-4.50%
1001	-5.25%
1000	-6.00%

Downloaded from Arrow.com.

20.2.6 LOW-POWER RC OSCILLATOR (LPRC)

The LPRC oscillator is a component of the Watchdog Timer (WDT) and oscillates at a nominal frequency of 512 kHz. The LPRC oscillator is the clock source for the Power-up Timer (PWRT) circuit, WDT and clock monitor circuits. It may also be used to provide a low frequency clock source option for applications where power consumption is critical, and timing accuracy is not required.

The LPRC oscillator is always enabled at a Power-on Reset, because it is the clock source for the PWRT. After the PWRT expires, the LPRC oscillator will remain ON if one of the following is TRUE:

- The Fail-Safe Clock Monitor is enabled
- The WDT is enabled
- The LPRC oscillator is selected as the system clock via the COSC<2:0> control bits in the OSCCON register

If one of the above conditions is not true, the LPRC will shut-off after the PWRT expires.

Note 1:	OSC2 pin function is determined by the Primary Oscillator mode selection (FPR<4:0>).
2:	Note that OSC1 pin cannot be used as an I/O pin, even if the secondary oscillator or an internal clock source is selected at all times.

20.2.7 FAIL-SAFE CLOCK MONITOR

The Fail-Safe Clock Monitor (FSCM) allows the device to continue to operate even in the event of an oscillator failure. The FSCM function is enabled by appropriately programming the FCKSM Configuration bits (Clock Switch and Monitor Selection bits) in the FOSC device Configuration register. If the FSCM function is enabled, the LPRC internal oscillator will run at all times (except during Sleep mode) and will not be subject to control by the SWDTEN bit.

In the event of an oscillator failure, the FSCM will generate a clock failure trap event and will switch the system clock over to the FRC oscillator. The user will then have the option to either attempt to restart the oscillator or execute a controlled shutdown. The user may decide to treat the trap as a warm Reset by simply loading the Reset address into the oscillator fail trap vector. In this event, the CF (Clock Fail) status bit (OSCCON<3>) is also set whenever a clock failure is recognized.

In the event of a clock failure, the WDT is unaffected and continues to run on the LPRC clock.

If the oscillator has a very slow start-up time coming out of POR, BOR or Sleep, it is possible that the PWRT timer will expire before the oscillator has started. In such cases, the FSCM will be activated and the FSCM will initiate a clock failure trap, and the COSC<2:0> bits are loaded with FRC oscillator selection. This will effectively shut-off the original oscillator that was trying to start.

The user may detect this situation and restart the oscillator in the clock fail trap ISR.

Upon a clock failure detection, the FSCM module will initiate a clock switch to the FRC oscillator as follows:

1. The COSC bits (OSCCON<14:12>) are loaded with the FRC oscillator selection value.
2. CF bit is set (OSCCON<3>).
3. OSWEN control bit (OSCCON<0>) is cleared.

For the purpose of clock switching, the clock sources are sectioned into four groups:

- Primary
- Secondary
- Internal FRC
- Internal LPRC

The user can switch between these functional groups, but cannot switch between options within a group. If the primary group is selected, then the choice within the group is always determined by the FPR<4:0> Configuration bits.

The OSCCON register holds the control and status bits related to clock switching.

- COSC<2:0>: Read-only status bits always reflect the current oscillator group in effect
- NOSC<2:0>: Control bits which are written to indicate the new oscillator group of choice
  - On POR and BOR, COSC<2:0> and NOSC<2:0> are both loaded with the Configuration bit values FOS<2:0>
- LOCK: The LOCK status bit indicates a PLL lock
- CF: Read-only status bit indicating if a clock fail detect has occurred
- OSWEN: Control bit changes from a '0' to a '1' when a clock transition sequence is initiated. Clearing the OSWEN control bit will abort a clock transition in progress (used for hang-up situations).

If Configuration bits FCKSM<1:0> = 1x, then the clock switching and Fail-Safe Clock Monitor functions are disabled. This is the default Configuration bit setting.

If clock switching is disabled, then the FOS<2:0> and FPR<4:0> bits directly control the oscillator selection and the COSC<2:0> bits do not control the clock selection. However, these bits will reflect the clock source selection.

Note:	The application should not attempt to switch to a clock of frequency lower than 100 kHz when the Fail-Safe Clock Monitor is enabled. If clock switching is performed, the device may generate an oscillator fail trap and switch to the fast RC oscillator.

© 2011 Microchip Technology Inc.

Downloaded from Arrow.com.

20.2.8 PROTECTION AGAINST ACCIDENTAL WRITES TO OSCCON

A write to the OSCCON register is intentionally made difficult because it controls clock switching and clock scaling.

To write to the OSCCON low byte, the following code sequence must be executed without any other instructions in between:

```
Byte Write 0x46 to OSCCON low
Byte Write 0x57 to OSCCON low
```

Byte write is allowed for one instruction cycle. Write the desired value or use bit manipulation instruction.

To write to the OSCCON high byte, the following instructions must be executed without any other instructions in between:

```
Byte Write 0x78 to OSCCON high
Byte Write 0x9A to OSCCON high
```

Byte write is allowed for one instruction cycle. Write the desired value or use bit manipulation instruction.

20.3 Oscillator Control Registers

The oscillators are controlled with two SFRs, OSCCON and OSCTUN and one Configuration register, FOSC.

Note:	The description of the OSCCON and OSCTUN SFRs, as well as the FOSC Configuration register provided in this section are applicable only to the dsPIC30F6011A/6012A/6013A/6014A devices in the dsPIC30F product family.

Downloaded from Arrow.com.

REGISTER 20-1: OSCCON: OSCILLATOR CONTROL REGISTER

U-0	R-y	R-y	R-y	U-0	R/W-y	R/W-y	R/W-y
—	COSC<2:0>			—	NOSC<2:0>		
bit 15							bit 8

R/W-0	R/W-0	R-0	U-0	R/W-0	U-0	R/W-0	R/W-0
POST<1:0>		LOCK	—	CF	—	LPOSCEN	OSWEN
bit 7							bit 0

Legend:	y = Values dependent on FOSC		
R = Readable bit	W = Writable bit	U = Unimplemented bit, read as ‘0’	
-n = Value at POR	‘1’ = Bit is set	‘0’ = Bit is cleared	x = Bit is unknown

bit 15 **Unimplemented:** Read as ‘0’

bit 14-12 **COSC<2:0>:** Current Oscillator Group Selection bits (read-only)
111 = PLL Oscillator; PLL source selected by FPR<4:0> bits
011 = External Oscillator; OSC1/OSC2 pins; External Oscillator configuration selected by FPR<4:0> bits
010 = LPRC internal low-power RC
001 = FRC internal fast RC
000 = LP crystal oscillator; SOSCI/SOSCO pins
Set to FOS<2:0> values on POR or BOR.
Loaded with NOSC<2:0> at the completion of a successful clock switch.
Set to FRC value when FSCM detects a failure and switches clock to FRC.

bit 11 **Unimplemented:** Read as ‘0’

bit 10-8 **NOSC<2:0>:** New Oscillator Group Selection bits
111 = PLL Oscillator; PLL source selected by FPR<4:0> bits
011 = External Oscillator; OSC1/OSC2 pins; External Oscillator configuration selected by FPR<4:0> bits
010 = LPRC internal low-power RC
001 = FRC internal fast RC
000 = LP crystal oscillator; SOSCI/SOSCO pins
Set to FOS<2:0> values on POR or BOR.

bit 7-6 **POST<1:0>:** Oscillator Postscaler Selection bits
11 = Oscillator postscaler divides clock by 64
10 = Oscillator postscaler divides clock by 16
01 = Oscillator postscaler divides clock by 4
00 = Oscillator postscaler does not alter clock

bit 5 **LOCK:** PLL Lock status bit (Read Only)
1 = Indicates that PLL is in lock
0 = Indicates that PLL is out of lock (or disabled)

bit 4 **Unimplemented:** Read as ‘0’

bit 3 **CF:** Clock Fail Detect bit (read/clearable by application)
1 = FSCM has detected clock failure
0 = FSCM has NOT detected clock failure

bit 2 **Unimplemented:** Read as ‘0’

bit 1 **LPOSCEN:** 32 kHz Secondary (LP) Oscillator Enable
1 = Secondary Oscillator is enabled
0 = Secondary Oscillator is disabled

bit 0 **OSWEN:** Oscillator Switch Enable bit
1 = Request Oscillator switch to selection specified by NOSC<2:0> bits
0 = Oscillator switch is complete

© 2011 Microchip Technology Inc.

Downloaded from Arrow.com.

REGISTER 20-2: OSCTUN: FRC OSCILLATOR TUNING REGISTER

U-0	U-0	U-0	U-0	U-0	U-0	U-0	U-0
—	—	—	—	—	—	—	—
bit 15							bit 8

U-0	U-0	U-0	U-0	R/W-0	R/W-0	R/W-0	R/W-0
—	—	—	—	TUN<3:0>			
bit 7							bit 0

Legend:			
R = Readable bit	W = Writable bit	U = Unimplemented bit, read as ‘0’	
-n = Value at POR	‘1’ = Bit is set	‘0’ = Bit is cleared	x = Bit is unknown

bit 15 -4 **Unimplemented:** Read as ‘0’

bit 3-0 **TUN<3:0>:** Lower two bits of TUN field. The four bit field specified by TUN<3:0> specifies the user tuning capability for the internal fast RC oscillator (nominal 7.37 MHz).

0111 = Maximum Frequency
0110 =
0101 =
0100 =
0011 =
0010 =
0001 =
0000 = Center Frequency, Oscillator is running at calibrated frequency
1111 =
1110 =
1101 =
1100 =
1011 =
1010 =
1001 =
1000 = Minimum Frequency

Downloaded from Arrow.com.

REGISTER 20-3: FOSC: OSCILLATOR CONFIGURATION REGISTER

U-0	U-0	U-0	U-0	U-0	U-0	U-0	U-0
—	—	—	—	—	—	—	—
bit 23							bit 16

R/P	R/P	U-0	U-0	U-0	R/P	R/P	R/P
FCKSM<1:0>		—	—	—	FOS<2:0>		
bit 15							bit 8

U-0	U-0	U-0	R/P	R/P	R/P	R/P	R/P
—	—	—	FPR<4:0>				
bit 7							bit 0

Legend:			
R = Readable bit	W = Writable bit	U = Unimplemented bit, read as ‘0’	
-n = Value at POR	‘1’ = Bit is set	‘0’ = Bit is cleared	x = Bit is unknown

bit 23-16 **Unimplemented:** Read as ‘0’

bit 15-14 **FCKSM<1:0>:** Clock Switching and Monitor Selection Configuration bits
1x = Clock switching is disabled, fail safe clock monitor is disabled
01 = Clock switching is enabled, fail safe clock monitor is disabled
00 = Clock switching is enabled, fail safe clock monitor is enabled

bit 13-11 **Unimplemented:** Read as ‘0’

bit 10-8 **FOS<2:0>:** Oscillator Group Selection on POR bits
111 = PLL Oscillator; PLL source selected by FPR<4:0> bits, see Table 20-2.
011 = EXT: External Oscillator; OSC1/OSC2 pins; External Oscillator configuration selected by FPR<4:0> bits
010 = LPRC: Internal Low Power RC
001 = FRC: Internal Fast RC
000 = LPOSC: Low Power Crystal Oscillator; SOSCI/SOSCO pins

bit 7-5 **Unimplemented:** Read as ‘0’

bit 4-0 **FPR<4:0>:** Oscillator Selection within Primary Group bits, see Table 20-2.

© 2011 Microchip Technology Inc.

Downloaded from Arrow.com.

20.4 Reset

The dsPIC30F differentiates between various kinds of Reset:

- Power-on Reset (POR)
- $\overline{\text{MCLR}}$ Reset during normal operation
- $\overline{\text{MCLR}}$ Reset during Sleep
- Watchdog Timer (WDT) Reset (during normal operation)
- Programmable Brown-out Reset (BOR)
- RESET Instruction
- Reset caused by trap lockup (TRAPR)
- Reset caused by illegal opcode, or by using an uninitialized W register as an Address Pointer (IOPUWR)

Different registers are affected in different ways by various Reset conditions. Most registers are not affected by a WDT wake-up, since this is viewed as the resumption of normal operation. Status bits from the RCON register are set or cleared differently in different Reset situations, as indicated in Table 20-5. These bits are used in software to determine the nature of the Reset.

A block diagram of the on-chip Reset circuit is shown in Figure 20-2.

A $\overline{\text{MCLR}}$ noise filter is provided in the $\overline{\text{MCLR}}$ Reset path. The filter detects and ignores small pulses.

Internally generated Resets do not drive $\overline{\text{MCLR}}$ pin low.

20.4.1 POR: POWER-ON RESET

A power-on event will generate an internal POR pulse when a VDD rise is detected. The Reset pulse will occur at the POR circuit threshold voltage (VPOR), which is nominally 1.85V. The device supply voltage characteristics must meet specified starting voltage and rise rate requirements. The POR pulse will reset a POR timer and place the device in the Reset state. The POR also selects the device clock source identified by the oscillator configuration fuses.

The POR circuit inserts a small delay, TPOR, which is nominally 10 µs and ensures that the device bias circuits are stable. Furthermore, a user selected power-up time-out (TPWRT) is applied. The TPWRT parameter is based on device Configuration bits and can be 0 ms (no delay), 4 ms, 16 ms or 64 ms. The total delay is at device power-up TPOR + TPWRT. When these delays have expired, $\overline{\text{SYSRST}}$ will be negated on the next leading edge of the Q1 clock, and the PC will jump to the Reset vector.

The timing for the $\overline{\text{SYSRST}}$ signal is shown in Figure 20-3 through Figure 20-5.

FIGURE 20-2: RESET SYSTEM BLOCK DIAGRAM

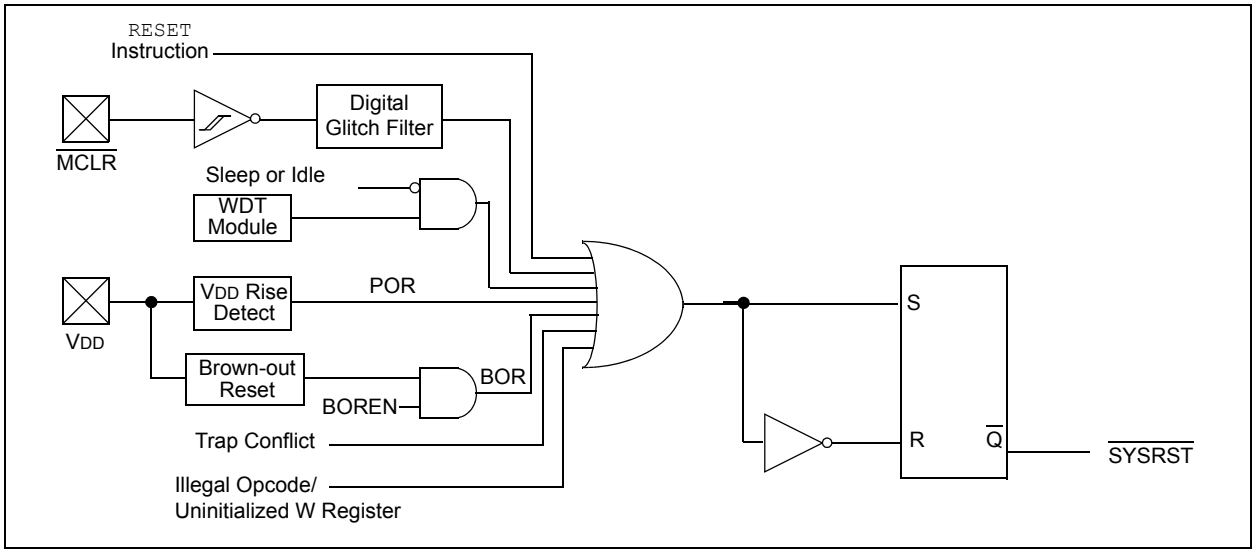

Downloaded from Arrow.com.

FIGURE 20-3: TIME-OUT SEQUENCE ON POWER-UP ($\overline{MCLR}$ TIED TO VDD)

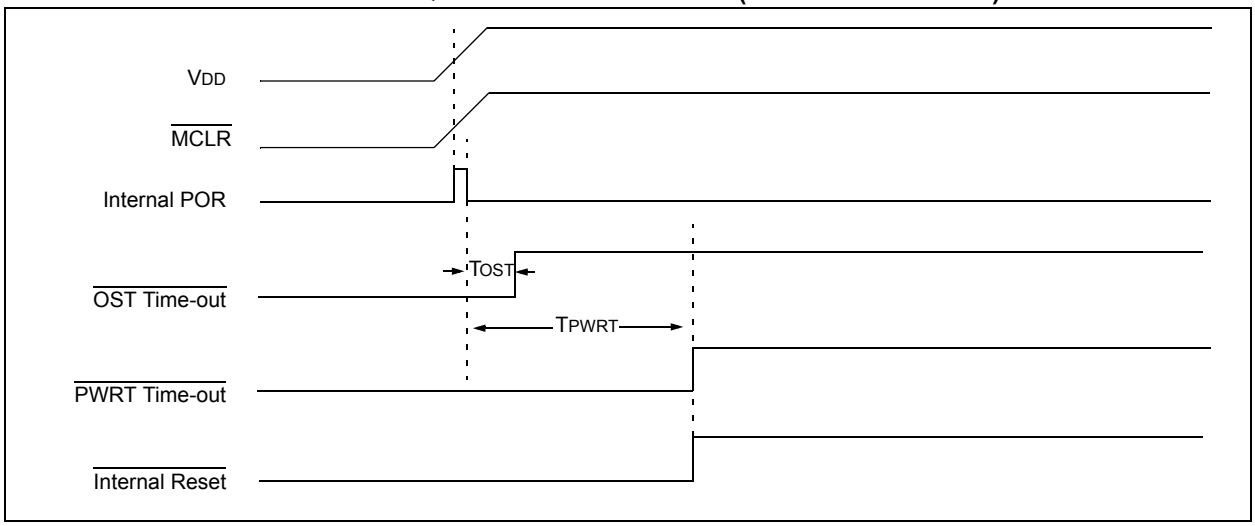

FIGURE 20-4: TIME-OUT SEQUENCE ON POWER-UP ($\overline{MCLR}$ NOT TIED TO VDD): CASE 1

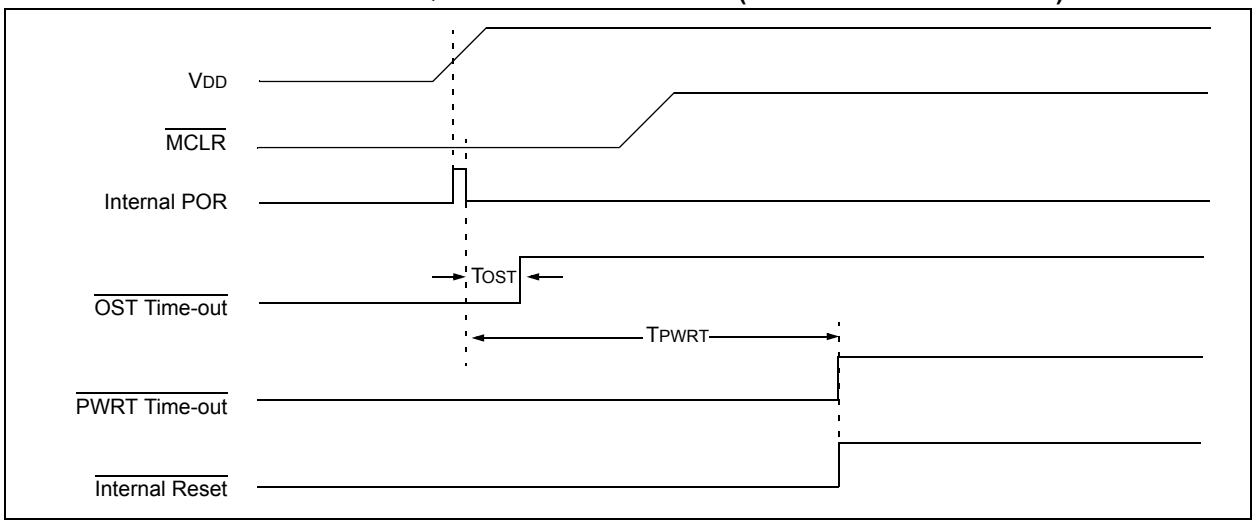

FIGURE 20-5: TIME-OUT SEQUENCE ON POWER-UP ($\overline{MCLR}$ NOT TIED TO VDD): CASE 2

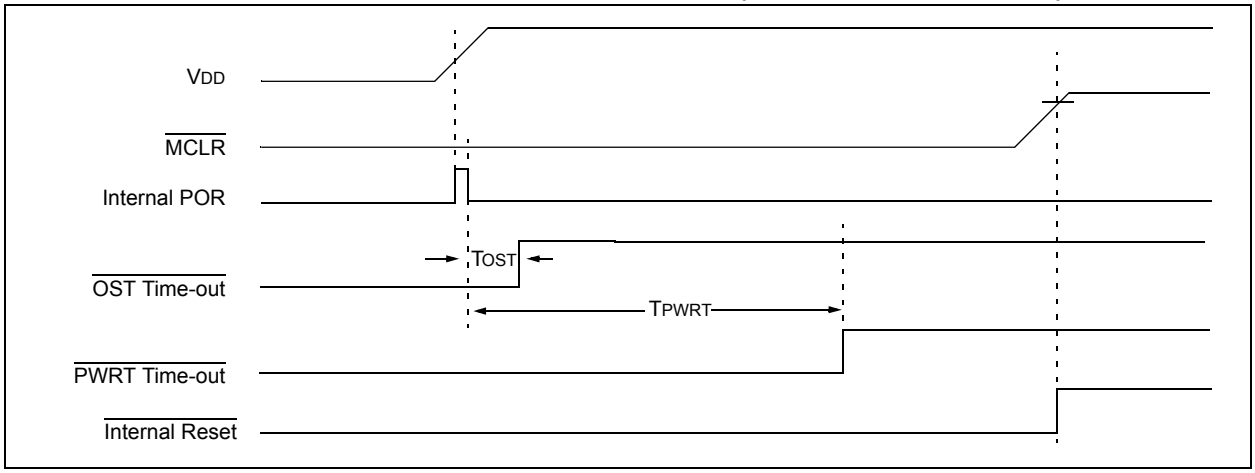

© 2011 Microchip Technology Inc.

Downloaded from Arrow.com.

20.4.1.1 POR with Long Crystal Start-up Time (with FSCM Enabled)

The oscillator start-up circuitry is not linked to the POR circuitry. Some crystal circuits (especially low frequency crystals) will have a relatively long start-up time. Therefore, one or more of the following conditions is possible after the POR timer and the PWRT have expired:

- The oscillator circuit has not begun to oscillate.
- The Oscillator Start-up Timer has NOT expired (if a crystal oscillator is used).
- The PLL has not achieved a LOCK (if PLL is used).

If the FSCM is enabled and one of the above conditions is true, then a clock failure trap will occur. The device will automatically switch to the FRC oscillator and the user can switch to the desired crystal oscillator in the trap ISR.

20.4.1.2 Operating without FSCM and PWRT

If the FSCM is disabled and the Power-up Timer (PWRT) is also disabled, then the device will exit rapidly from Reset on power-up. If the clock source is FRC, LPRC, EXTRC or EC, it will be active immediately.

If the FSCM is disabled and the system clock has not started, the device will be in a frozen state at the Reset vector until the system clock starts. From the user's perspective, the device will appear to be in Reset until a system clock is available.

20.4.2 BOR: PROGRAMMABLE BROWN-OUT RESET

The BOR (Brown-out Reset) module is based on an internal voltage reference circuit. The main purpose of the BOR module is to generate a device Reset when a brown-out condition occurs. Brown-out conditions are generally caused by glitches on the AC mains (i.e., missing portions of the AC cycle waveform due to bad power transmission lines or voltage sags due to excessive current draw when a large inductive load is turned on).

The BOR module allows selection of one of the following voltage trip points:

- 2.6V-2.71V
- 4.1V-4.4V
- 4.58V-4.73V

Note:	The BOR voltage trip points indicated here are nominal values provided for design guidance only.

A BOR will generate a Reset pulse which will reset the device. The BOR will select the clock source, based on the device Configuration bit values (FOS<2:0> and FPR<4:0>). Furthermore, if an oscillator mode is selected, the BOR will activate the Oscillator Start-up Timer (OST). The system clock is held until OST expires. If the PLL is used, then the clock will be held until the LOCK bit (OSCCON<5>) is '1'.

Concurrently, the POR time-out (T_{POR}) and the PWRT time-out (T_{PWRT}) will be applied before the internal Reset is released. If T_{PWRT} = 0 and a crystal oscillator is being used, then a nominal delay of T_{FSCM} = 100 µs is applied. The total delay in this case is (T_{POR} + T_{FSCM}).

The BOR status bit (RCON<1>) will be set to indicate that a BOR has occurred. The BOR circuit, if enabled, will continue to operate while in Sleep or Idle modes and will reset the device should V_{DD} fall below the BOR threshold voltage.

FIGURE 20-6: EXTERNAL POWER-ON RESET CIRCUIT (FOR SLOW V_{DD} POWER-UP)

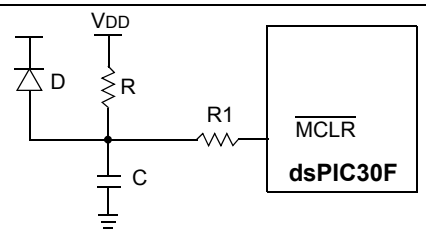

Note 1: External Power-on Reset circuit is required only if the V_{DD} power-up slope is too slow. The diode D helps discharge the capacitor quickly when V_{DD} powers down.

2: R should be suitably chosen so as to make sure that the voltage drop across R does not violate the device's electrical specification.

3: R1 should be suitably chosen so as to limit any current flowing into $\overline{MCLR}$ from external capacitor C, in the event of $\overline{MCLR}$/V_{PP} pin breakdown due to Electrostatic Discharge (ESD) or Electrical Overstress (EOS).

Note:	Dedicated supervisory devices, such as the MCP1XX and MCP8XX, may also be used as an external Power-on Reset circuit.

Downloaded from Arrow.com.

Table 20-5 shows the Reset conditions for the RCON register. Since the control bits within the RCON register are R/W, the information in the table implies that all the bits are negated prior to the action specified in the condition column.

TABLE 20-5: INITIALIZATION CONDITION FOR RCON REGISTER CASE 1

Condition	Program Counter	TRAPR	IOPUWR	EXTR	SWR	WDTO	IDLE	SLEEP	POR	BOR
Power-on Reset	0x000000	0	0	0	0	0	0	0	1	1
Brown-out Reset	0x000000	0	0	0	0	0	0	0	0	1
$\overline{\text{MCLR}}$ Reset during normal operation	0x000000	0	0	1	0	0	0	0	0	0
Software Reset during normal operation	0x000000	0	0	0	1	0	0	0	0	0
$\overline{\text{MCLR}}$ Reset during Sleep	0x000000	0	0	1	0	0	0	1	0	0
$\overline{\text{MCLR}}$ Reset during Idle	0x000000	0	0	1	0	0	1	0	0	0
WDT Time-out Reset	0x000000	0	0	0	0	1	0	0	0	0
WDT Wake-up	PC + 2	0	0	0	0	1	0	1	0	0
Interrupt Wake-up from Sleep	PC + 2(1)	0	0	0	0	0	0	1	0	0
Clock Failure Trap	0x000004	0	0	0	0	0	0	0	0	0
Trap Reset	0x000000	1	0	0	0	0	0	0	0	0
Illegal Operation Trap	0x000000	0	1	0	0	0	0	0	0	0

Note 1: When the wake-up is due to an enabled interrupt, the PC is loaded with the corresponding interrupt vector.

Table 20-6 shows a second example of the bit conditions for the RCON register. In this case, it is not assumed the user has set/cleared specific bits prior to action specified in the condition column.

TABLE 20-6: INITIALIZATION CONDITION FOR RCON REGISTER CASE 2

Condition	Program Counter	TRAPR	IOPUWR	EXTR	SWR	WDTO	IDLE	SLEEP	POR	BOR
Power-on Reset	0x000000	0	0	0	0	0	0	0	1	1
Brown-out Reset	0x000000	u	u	u	u	u	u	u	0	1
$\overline{\text{MCLR}}$ Reset during normal operation	0x000000	u	u	1	0	0	0	0	u	u
Software Reset during normal operation	0x000000	u	u	0	1	0	0	0	u	u
$\overline{\text{MCLR}}$ Reset during Sleep	0x000000	u	u	1	u	0	0	1	u	u
$\overline{\text{MCLR}}$ Reset during Idle	0x000000	u	u	1	u	0	1	0	u	u
WDT Time-out Reset	0x000000	u	u	0	0	1	0	0	u	u
WDT Wake-up	PC + 2	u	u	u	u	1	u	1	u	u
Interrupt Wake-up from Sleep	PC + 2(1)	u	u	u	u	u	u	1	u	u
Clock Failure Trap	0x000004	u	u	u	u	u	u	u	u	u
Trap Reset	0x000000	1	u	u	u	u	u	u	u	u
Illegal Operation Reset	0x000000	u	1	u	u	u	u	u	u	u

Legend: u = unchanged

Note 1: When the wake-up is due to an enabled interrupt, the PC is loaded with the corresponding interrupt vector.

© 2011 Microchip Technology Inc.

Downloaded from Arrow.com.

20.5 Watchdog Timer (WDT)

20.5.1 WATCHDOG TIMER OPERATION

The primary function of the Watchdog Timer (WDT) is to reset the processor in the event of a software malfunction. The WDT is a free running timer, which runs off an on-chip RC oscillator, requiring no external component. Therefore, the WDT timer will continue to operate even if the main processor clock (e.g., the crystal oscillator) fails.

20.5.2 ENABLING AND DISABLING THE WDT

The Watchdog Timer can be “Enabled” or “Disabled” only through a Configuration bit (FWDTEN) in the Configuration register FWDT.

Setting FWDTEN = `1` enables the Watchdog Timer. The enabling is done when programming the device. By default, after chip-erase, FWDTEN bit = `1`. Any device programmer capable of programming dsPIC30F devices allows programming of this and other Configuration bits.

If enabled, the WDT will increment until it overflows or “times out”. A WDT time-out will force a device Reset (except during Sleep). To prevent a WDT time-out, the user must clear the Watchdog Timer using a `CLRWDT` instruction.

If a WDT times out during Sleep, the device will wake-up. The WDTO bit in the RCON register will be cleared to indicate a wake-up resulting from a WDT time-out.

Setting FWDTEN = `0` allows user software to enable/disable the Watchdog Timer via the SWDTEN control bit (RCON<5>).

20.6 Low-Voltage Detect

The Low-Voltage Detect (LVD) module is used to detect when the V_{DD} of the device drops below a threshold value, V_{LVD}, which is determined by the LVDL<3:0> bits (RCON<11:8>) and is thus user programmable. The internal voltage reference circuitry requires a nominal amount of time to stabilize, and the BGST bit (RCON<13>) indicates when the voltage reference has stabilized.

In some devices, the LVD threshold voltage may be applied externally on the LVDIN pin.

The LVD module is enabled by setting the LVDEN bit (RCON<12>).

20.7 Power-Saving Modes

There are two power-saving states that can be entered through the execution of a special instruction, `PWRSAV`.

These are: Sleep and Idle.

The format of the `PWRSAV` instruction is as follows:

```
PWRSAV <parameter>,
```

where:

‘`parameter`’ defines Idle or Sleep mode.

20.7.1 SLEEP MODE

In Sleep mode, the clock to the CPU and peripherals is shutdown. If an on-chip oscillator is being used, it is shutdown.

The Fail-Safe Clock Monitor is not functional during Sleep, since there is no clock to monitor. However, LPRC clock remains active if WDT is operational during Sleep.

The Brown-out protection circuit, if enabled, will remain functional during Sleep.

The processor wakes up from Sleep if at least one of the following conditions has occurred:

- On any interrupt that is individually enabled and meets the required priority level
- On any Reset (POR, BOR and $\overline{\text{MCLR}}$)
- On WDT time-out

On waking up from Sleep mode, the processor will restart the same clock that was active prior to entry into Sleep mode. When clock switching is enabled, bits COSC<2:0> will determine the oscillator source that will be used on wake-up. If clock switch is disabled, then there is only one system clock.

Note:	If a POR or BOR occurred, the selection of the oscillator is based on the FOS<2:0> and FPR<4:0> Configuration bits.

If the clock source is an oscillator, the clock to the device is held off until OST times out (indicating a stable oscillator). If PLL is used, the system clock is held off until LOCK = `1` (indicating that the PLL is stable). Either way, T_{POR}, T_{LOCK} and T_{PWRT} delays are applied.

If EC, FRC, LPRC or EXTRC oscillators are used, then a delay of T_{POR} (~ 10 µs) is applied. This is the smallest delay possible on wake-up from Sleep.

Moreover, if LP oscillator was active during Sleep, and LP is the oscillator used on wake-up, then the start-up delay will be equal to T_{POR}. PWRT delay and OST timer delay are not applied. In order to have the smallest possible start-up delay when waking up from Sleep, one of these faster wake-up options should be selected before entering Sleep.

Downloaded from Arrow.com.

Any interrupt that is individually enabled (using the corresponding IE bit) and meets the prevailing priority level will be able to wake-up the processor. The processor will process the interrupt and branch to the ISR. The Sleep status bit in RCON register is set upon wake-up.

Note:	In spite of various delays applied (TPOR, TLOCK and TPWRT), the crystal oscillator (and PLL) may not be active at the end of the time-out (e.g., for low-frequency crystals). In such cases, if FSCM is enabled, then the device will detect this as a clock failure and process the clock failure trap, the FRC oscillator will be enabled, and the user will have to re-enable the crystal oscillator. If FSCM is not enabled, then the device will simply suspend execution of code until the clock is stable, and will remain in Sleep until the oscillator clock has started.

All Resets will wake-up the processor from Sleep mode. Any Reset, other than POR, will set the Sleep status bit. In a POR, the Sleep bit is cleared.

If Watchdog Timer is enabled, then the processor will wake-up from Sleep mode upon WDT time-out. The Sleep and WDTO status bits are both set.

20.7.2 IDLE MODE

In Idle mode, the clock to the CPU is shutdown while peripherals keep running. Unlike Sleep mode, the clock source remains active.

Several peripherals have a control bit in each module that allows them to operate during Idle.

LPRC fail-safe clock remains active if clock failure detect is enabled.

The processor wakes up from Idle if at least one of the following conditions is true:

- On any interrupt that is individually enabled (IE bit is '1') and meets the required priority level
- On any Reset (POR, BOR, $\overline{\text{MCLR}}$)
- On WDT time-out

Upon wake-up from Idle mode, the clock is re-applied to the CPU and instruction execution begins immediately, starting with the instruction following the `PWRSAV` instruction.

Any interrupt that is individually enabled (using IE bit) and meets the prevailing priority level will be able to wake-up the processor. The processor will process the interrupt and branch to the ISR. The IDLE status bit in RCON register is set upon wake-up.

Any Reset, other than POR, will set the Idle status bit. On a POR, the Idle bit is cleared.

If Watchdog Timer is enabled, then the processor will wake-up from Idle mode upon WDT time-out. The Idle and WDTO status bits are both set.

Unlike wake-up from Sleep, there are no time delays involved in wake-up from Idle.

20.8 Device Configuration Registers

The Configuration bits in each device Configuration register specify some of the device modes and are programmed by a device programmer, or by using the In-Circuit Serial Programming (ICSP) feature of the device. Each device Configuration register is a 24-bit register, but only the lower 16 bits of each register are used to hold configuration data. There are seven device Configuration registers available to the user:

1. FOSC (0xF80000): Oscillator Configuration register
2. FWDT (0xF80002): Watchdog Timer Configuration register
3. FBORPOR (0xF80004): BOR and POR Configuration register
4. FBS (0xF80006): Boot Code Segment Configuration register
5. FSS (0xF80008): Secure Code Segment Configuration register
6. FGS (0xF8000A): General Code Segment Configuration register
7. FICD (0xF8000C): Debug Configuration Register

The placement of the Configuration bits is automatically handled when you select the device in your device programmer. The desired state of the Configuration bits may be specified in the source code (dependent on the language tool used), or through the programming interface. After the device has been programmed, the application software may read the Configuration bit values through the table read instructions. For additional information, please refer to the *"dsPIC30F Flash Programming Specification"* (DS70102) and the "*dsPIC30F Family Reference Manual*" (DS70046).

Note:	If the code protection Configuration Fuse bits (FBS(BSS<2:0>), FSS(SSS<2:0>), FGS<GSS>, FGS<GWRP>) have been programmed, an erase of the entire code-protected device is only possible at voltages VDD ≥ 4.5V.

© 2011 Microchip Technology Inc.

Downloaded from Arrow.com.

20.9 Peripheral Module Disable (PMD) Registers

The Peripheral Module Disable (PMD) registers provide a method to disable a peripheral module by stopping all clock sources supplied to that module. When a peripheral is disabled via the appropriate PMD control bit, the peripheral is in a minimum power consumption state. The control and status registers associated with the peripheral will also be disabled so writes to those registers will have no effect and read values will be invalid.

A peripheral module will only be enabled if both the associated bit in the PMD register is cleared and the peripheral is supported by the specific dsPIC DSC variant. If the peripheral is present in the device, it is enabled in the PMD register by default.

Note:	If a PMD bit is set, the corresponding module is disabled after a delay of 1 instruction cycle. Similarly, if a PMD bit is cleared, the corresponding module is enabled after a delay of 1 instruction cycle (assuming the module control registers are already configured to enable module operation).

20.10 In-Circuit Debugger

When MPLAB® ICD 2 is selected as a debugger, the in-circuit debugging functionality is enabled. This function allows simple debugging functions when used with MPLAB IDE. When the device has this feature enabled, some of the resources are not available for general use. These resources include the first 80 bytes of data RAM and two I/O pins.

One of four pairs of debug I/O pins may be selected by the user using configuration options in MPLAB IDE. These pin pairs are named EMUD/EMUC, EMUD1/EMUC1, EMUD2/EMUC2 and EMUD3/EMUC3.

In each case, the selected EMUD pin is the Emulation/Debug Data line, and the EMUC pin is the Emulation/Debug Clock line. These pins will interface to the MPLAB ICD 2 module available from Microchip. The selected pair of debug I/O pins is used by MPLAB ICD 2 to send commands and receive responses, as well as to send and receive data. To use the in-circuit debugger function of the device, the design must implement ICSP connections to $\overline{\text{MCLR}}$, V_{DD}, V_{SS}, PGC, PGD and the selected EMUDx/EMUCx pin pair.

This gives rise to two possibilities:

1. If EMUD/EMUC is selected as the debug I/O pin pair, then only a 5-pin interface is required, as the EMUD and EMUC pin functions are multiplexed with the PGD and PGC pin functions in all dsPIC30F devices.
2. If EMUD1/EMUC1, EMUD2/EMUC2 or EMUD3/EMUC3 is selected as the debug I/O pin pair, then a 7-pin interface is required, as the EMUDx/EMUCx pin functions (x = 1, 2 or 3) are not multiplexed with the PGD and PGC pin functions.

Downloaded from Arrow.com.

TABLE 20-7: SYSTEM INTEGRATION REGISTER MAP FOR dsPIC30F601XA(1)

SFR Name	Addr.	Bit 15	Bit 14	Bit 13	Bit 12	Bit 11	Bit 10	Bit 9	Bit 8	Bit 7	Bit 6	Bit 5	Bit 4	Bit 3	Bit 2	Bit 1	Bit 0	Reset State
RCON	0740	TRAPR	IOPUWR	BGST	LVDEN	LVDL<3:0>				EXTR	SWR	SWDTEN	WDTO	SLEEP	IDLE	BOR	POR	Depends on type of Reset.
OSCCON	0742	—	COSC<2:0>			—	NOSC<2:0>			POST<1:0>		LOCK	—	CF	—	LPOSCEN	OSWEN	Depends on Configuration bits.
OSCTUN	0744	—	—	—	—	—	—	—	—	—	—	—	—	TUN<3:0>				0000 0000 0000 0000
PMD1	0770	T5MD	T4MD	T3MD	T2MD	T1MD	—	—	DCIMD	I2CMD	U2MD	U1MD	SPI2MD	SPI1MD	C2MD	C1MD	ADCMD	0000 0000 0000 0000
PMD2	0772	IC8MD	IC7MD	IC6MD	IC5MD	IC4MD	IC3MD	IC2MD	IC1MD	OC8MD	OC7MD	OC6MD	OC5MD	OC4MD	OC3MD	OC2MD	OC1MD	0000 0000 0000 0000

Legend: — = unimplemented bit, read as '0'

Note 1: Refer to the *"dsPIC30F Family Reference Manual"* (DS70046) for descriptions of register bit fields.

TABLE 20-8: DEVICE CONFIGURATION REGISTER MAP(1)

Name	Address	Bit 15	Bit 14	Bit 13	Bit 12	Bit 11	Bit 10	Bit 9	Bit 8	Bit 7	Bit 6	Bit 5	Bit 4	Bit 3	Bit 2	Bit 1	Bit 0
FOSC	F80000	FCKSM<1:0>		—	—	—	FOS<2:0>			—	—	—	FPR<4:0>				
FWDT	F80002	FWDTEN	—	—	—	—	—	—	—	—	—	FWPSA<1:0>		FWPSB<3:0>			
FBORPOR	F80004	MCLREN	—	—	—	—	PWMPIN(2)	HPOL(2)	LPOL(2)	BOREN	—	BORV<1:0>		—	—	FPWRT<1:0>	
FBS	F80006	—	—	RBS<1:0>		—	—	—	EBS	—	—	—	—	BSS<2:0>			BWRP
FSS	F80008	—	—	RSS<1:0>		—	—	ESS<1:0>		—	—	—	—	SSS<2:0>			SWRP
FGS	F8000A	—	—	—	—	—	—	—	—	—	—	—	—	—	GSS<1:0>		GWRP
FICD	F8000C	BKBUG	COE	—	—	—	—	—	—	—	—	—	—	—	—	ICS<1:0>	

Legend: — = unimplemented bit, read as '0'

Note 1: Refer to the *"dsPIC30F Family Reference Manual"* (DS70046) for descriptions of register bit fields.

2: These bits are reserved (read as '1' and must be programmed as '1').

© 2011 Microchip Technology Inc.

Downloaded from Arrow.com.

21.0 INSTRUCTION SET SUMMARY

Note: This data sheet summarizes features of this group of dsPIC30F devices and is not intended to be a complete reference source. For more information on the CPU, peripherals, register descriptions and general device functionality, refer to the "*dsPIC30F Family Reference Manual*" (DS70046). For more information on the device instruction set and programming, refer to the *"16-bit MCU and DSC Programmer's Reference Manual"* (DS70157).

The dsPIC30F instruction set adds many enhancements to the previous PIC MCU instruction sets, while maintaining an easy migration from PIC MCU instruction sets.

Most instructions are a single program memory word (24 bits). Only three instructions require two program memory locations.

Each single-word instruction is a 24-bit word divided into an 8-bit opcode which specifies the instruction type, and one or more operands which further specify the operation of the instruction.

The instruction set is highly orthogonal and is grouped into five basic categories:

- Word or byte-oriented operations
- Bit-oriented operations
- Literal operations
- DSP operations
- Control operations

Table 21-1 shows the general symbols used in describing the instructions.

The dsPIC30F instruction set summary in Table 21-2 lists all the instructions, along with the status flags affected by each instruction.

Most word or byte-oriented W register instructions (including barrel shift instructions) have three operands:

- The first source operand which is typically a register 'Wb' without any address modifier
- The second source operand which is typically a register 'Ws' with or without an address modifier
- The destination of the result which is typically a register 'Wd' with or without an address modifier

However, word or byte-oriented file register instructions have two operands:

- The file register specified by the value 'f'
- The destination, which could either be the file register 'f' or the W0 register, which is denoted as 'WREG'

Most bit-oriented instructions (including simple rotate/shift instructions) have two operands:

- The W register (with or without an address modifier) or file register (specified by the value of 'Ws' or 'f')
- The bit in the W register or file register (specified by a literal value or indirectly by the contents of register 'Wb')

The literal instructions that involve data movement may use some of the following operands:

- A literal value to be loaded into a W register or file register (specified by the value of 'k')
- The W register or file register where the literal value is to be loaded (specified by 'Wb' or 'f')

However, literal instructions that involve arithmetic or logical operations use some of the following operands:

- The first source operand which is a register 'Wb' without any address modifier
- The second source operand which is a literal value
- The destination of the result (only if not the same as the first source operand) which is typically a register 'Wd' with or without an address modifier

The `MAC` class of DSP instructions may use some of the following operands:

- The accumulator (A or B) to be used (required operand)
- The W registers to be used as the two operands
- The X and Y address space prefetch operations
- The X and Y address space prefetch destinations
- The accumulator write back destination

The other DSP instructions do not involve any multiplication, and may include:

- The accumulator to be used (required)
- The source or destination operand (designated as Wso or Wdo, respectively) with or without an address modifier
- The amount of shift specified by a W register 'Wn' or a literal value

The control instructions may use some of the following operands:

- A program memory address
- The mode of the table read and table write instructions

Downloaded from Arrow.com.

All instructions are a single word, except for certain double word instructions, which were made double word instructions so that all the required information is available in these 48 bits. In the second word, the 8 MSbs are '0's. If this second word is executed as an instruction (by itself), it will execute as a NOP.

Most single-word instructions are executed in a single instruction cycle, unless a conditional test is true or the Program Counter is changed as a result of the instruction. In these cases, the execution takes two instruction cycles with the additional instruction cycle(s) executed as a NOP. Notable exceptions are the BRA (unconditional/computed branch), indirect CALL/GOTO, all table reads and writes, and RETURN/RETFIE instructions, which are single-word instructions but take two or three cycles. Certain instructions that involve skipping over the subsequent instruction require either two or three cycles if the skip is performed, depending on whether the instruction being skipped is a single-word or two-word instruction. Moreover, double word moves require two cycles. The double word instructions execute in two instruction cycles.

Note: For more details on the instruction set, refer to the *"16-bit MCU and DSC Programmer's Reference Manual"*.

TABLE 21-1: SYMBOLS USED IN OPCODE DESCRIPTIONS

Field	Description
#text	Means literal defined by "text"
(text)	Means "content of text"
[text]	Means "the location addressed by text"
{ }	Optional field or operation
<n:m>	Register bit field
.b	Byte mode selection
.d	Double Word mode selection
.S	Shadow register select
.w	Word mode selection (default)
Acc	One of two accumulators {A, B}
AWB	Accumulator write back destination address register ∈ {W13, [W13] + = 2}
bit4	4-bit bit selection field (used in word addressed instructions) ∈ {0...15}
C, DC, N, OV, Z	MCU status bits: Carry, Digit Carry, Negative, Overflow, Sticky Zero
Expr	Absolute address, label or expression (resolved by the linker)
f	File register address ∈ {0x0000...0x1FFF}
lit1	1-bit unsigned literal ∈ {0,1}
lit4	4-bit unsigned literal ∈ {0...15}
lit5	5-bit unsigned literal ∈ {0...31}
lit8	8-bit unsigned literal ∈ {0...255}
lit10	10-bit unsigned literal ∈ {0...255} for Byte mode, {0:1023} for Word mode
lit14	14-bit unsigned literal ∈ {0...16384}
lit16	16-bit unsigned literal ∈ {0...65535}
lit23	23-bit unsigned literal ∈ {0...8388608}; LSB must be 0
None	Field does not require an entry, may be blank
OA, OB, SA, SB	DSP status bits: ACCA Overflow, ACCB Overflow, ACCA Saturate, ACCB Saturate
PC	Program Counter
Slit10	10-bit signed literal ∈ {-512...511}
Slit16	16-bit signed literal ∈ {-32768...32767}
Slit6	6-bit signed literal ∈ {-16...16}

© 2011 Microchip Technology Inc.

Downloaded from Arrow.com.

TABLE 21-1: SYMBOLS USED IN OPCODE DESCRIPTIONS (CONTINUED)

Field	Description
Wb	Base W register ∈ {W0..W15}
Wd	Destination W register ∈ { Wd, [Wd], [Wd++], [Wd--], [++Wd], [--Wd] }
Wdo	Destination W register ∈ { Wnd, [Wnd], [Wnd++], [Wnd--], [++Wnd], [--Wnd], [Wnd+Wb] }
Wm,Wn	Dividend, Divisor working register pair (direct addressing)
Wm*Wm	Multiplicand and Multiplier working register pair for Square instructions ∈ {W4 * W4,W5 * W5,W6 * W6,W7 * W7}
Wm*Wn	Multiplicand and Multiplier working register pair for DSP instructions ∈ {W4 * W5,W4 * W6,W4 * W7,W5 * W6,W5 * W7,W6 * W7}
Wn	One of 16 working registers ∈ {W0..W15}
Wnd	One of 16 destination working registers ∈ {W0..W15}
Wns	One of 16 source working registers ∈ {W0..W15}
WREG	W0 (working register used in file register instructions)
Ws	Source W register ∈ { Ws, [Ws], [Ws++], [Ws--], [++Ws], [--Ws] }
Wso	Source W register ∈ { Wns, [Wns], [Wns++], [Wns--], [++Wns], [--Wns], [Wns+Wb] }
Wx	X data space prefetch address register for DSP instructions ∈ {[W8] + = 6, [W8] + = 4, [W8] + = 2, [W8], [W8] - = 6, [W8] - = 4, [W8] - = 2, [W9] + = 6, [W9] + = 4, [W9] + = 2, [W9], [W9] - = 6, [W9] - = 4, [W9] - = 2, [W9 + W12],none}
Wxd	X data space prefetch destination register for DSP instructions ∈ {W4..W7}
Wy	Y data space prefetch address register for DSP instructions ∈ {[W10] + = 6, [W10] + = 4, [W10] + = 2, [W10], [W10] - = 6, [W10] - = 4, [W10] - = 2, [W11] + = 6, [W11] + = 4, [W11] + = 2, [W11], [W11] - = 6, [W11] - = 4, [W11] - = 2, [W11 + W12], none}
Wyd	Y data space prefetch destination register for DSP instructions ∈ {W4..W7}

Downloaded from Arrow.com.

TABLE 21-2: INSTRUCTION SET OVERVIEW

Base Instr #	Assembly Mnemonic	Assembly Syntax	Description	# of Words	# of Cycles	Status Flags Affected
1	ADD	ADD Acc	Add Accumulators	1	1	OA,OB,SA,SB
		ADD f	f = f + WREG	1	1	C,DC,N,OV,Z
		ADD f,WREG	WREG = f + WREG	1	1	C,DC,N,OV,Z
		ADD #lit10,Wn	Wd = lit10 + Wd	1	1	C,DC,N,OV,Z
		ADD Wb,Ws,Wd	Wd = Wb + Ws	1	1	C,DC,N,OV,Z
		ADD Wb,#lit5,Wd	Wd = Wb + lit5	1	1	C,DC,N,OV,Z
		ADD Wso,#Slit4,Acc	16-bit Signed Add to Accumulator	1	1	OA,OB,SA,SB
2	ADDC	ADDC f	f = f + WREG + (C)	1	1	C,DC,N,OV,Z
		ADDC f,WREG	WREG = f + WREG + (C)	1	1	C,DC,N,OV,Z
		ADDC #lit10,Wn	Wd = lit10 + Wd + (C)	1	1	C,DC,N,OV,Z
		ADDC Wb,Ws,Wd	Wd = Wb + Ws + (C)	1	1	C,DC,N,OV,Z
		ADDC Wb,#lit5,Wd	Wd = Wb + lit5 + (C)	1	1	C,DC,N,OV,Z
3	AND	AND f	f = f .AND. WREG	1	1	N,Z
		AND f,WREG	WREG = f .AND. WREG	1	1	N,Z
		AND #lit10,Wn	Wd = lit10 .AND. Wd	1	1	N,Z
		AND Wb,Ws,Wd	Wd = Wb .AND. Ws	1	1	N,Z
		AND Wb,#lit5,Wd	Wd = Wb .AND. lit5	1	1	N,Z
4	ASR	ASR f	f = Arithmetic Right Shift f	1	1	C,N,OV,Z
		ASR f,WREG	WREG = Arithmetic Right Shift f	1	1	C,N,OV,Z
		ASR Ws,Wd	Wd = Arithmetic Right Shift Ws	1	1	C,N,OV,Z
		ASR Wb,Wns,Wnd	Wnd = Arithmetic Right Shift Wb by Wns	1	1	N,Z
		ASR Wb,#lit5,Wnd	Wnd = Arithmetic Right Shift Wb by lit5	1	1	N,Z
5	BCLR	BCLR f,#bit4	Bit Clear f	1	1	None
		BCLR Ws,#bit4	Bit Clear Ws	1	1	None
6	BRA	BRA C,Expr	Branch if Carry	1	1 (2)	None
		BRA GE,Expr	Branch if greater than or equal	1	1 (2)	None
		BRA GEU,Expr	Branch if unsigned greater than or equal	1	1 (2)	None
		BRA GT,Expr	Branch if greater than	1	1 (2)	None
		BRA GTU,Expr	Branch if unsigned greater than	1	1 (2)	None
		BRA LE,Expr	Branch if less than or equal	1	1 (2)	None
		BRA LEU,Expr	Branch if unsigned less than or equal	1	1 (2)	None
		BRA LT,Expr	Branch if less than	1	1 (2)	None
		BRA LTU,Expr	Branch if unsigned less than	1	1 (2)	None
		BRA N,Expr	Branch if Negative	1	1 (2)	None
		BRA NC,Expr	Branch if Not Carry	1	1 (2)	None
		BRA NN,Expr	Branch if Not Negative	1	1 (2)	None
		BRA NOV,Expr	Branch if Not Overflow	1	1 (2)	None
		BRA NZ,Expr	Branch if Not Zero	1	1 (2)	None
		BRA OA,Expr	Branch if Accumulator A overflow	1	1 (2)	None
		BRA OB,Expr	Branch if Accumulator B overflow	1	1 (2)	None
		BRA OV,Expr	Branch if Overflow	1	1 (2)	None
		BRA SA,Expr	Branch if Accumulator A saturated	1	1 (2)	None
		BRA SB,Expr	Branch if Accumulator B saturated	1	1 (2)	None
		BRA Expr	Branch Unconditionally	1	2	None
		BRA Z,Expr	Branch if Zero	1	1 (2)	None
		BRA Wn	Computed Branch	1	2	None
7	BSET	BSET f,#bit4	Bit Set f	1	1	None
		BSET Ws,#bit4	Bit Set Ws	1	1	None
8	BSW	BSW.C Ws,Wb	Write C bit to Ws<Wb>	1	1	None
		BSW.Z Ws,Wb	Write Z bit to Ws<Wb>	1	1	None

© 2011 Microchip Technology Inc.

Downloaded from Arrow.com.

TABLE 21-2: INSTRUCTION SET OVERVIEW (CONTINUED)

Base Instr #	Assembly Mnemonic	Assembly Syntax	Description	# of Words	# of Cycles	Status Flags Affected
9	BTG	BTG f,#bit4	Bit Toggle f	1	1	None
		BTG Ws,#bit4	Bit Toggle Ws	1	1	None
10	BTSC	BTSC f,#bit4	Bit Test f, Skip if Clear	1	1 (2 or 3)	None
		BTSC Ws,#bit4	Bit Test Ws, Skip if Clear	1	1 (2 or 3)	None
11	BTSS	BTSS f,#bit4	Bit Test f, Skip if Set	1	1 (2 or 3)	None
		BTSS Ws,#bit4	Bit Test Ws, Skip if Set	1	1 (2 or 3)	None
12	BTST	BTST f,#bit4	Bit Test f	1	1	Z
		BTST.C Ws,#bit4	Bit Test Ws to C	1	1	C
		BTST.Z Ws,#bit4	Bit Test Ws to Z	1	1	Z
		BTST.C Ws,Wb	Bit Test Ws<Wb> to C	1	1	C
		BTST.Z Ws,Wb	Bit Test Ws<Wb> to Z	1	1	Z
13	BTSTS	BTSTS f,#bit4	Bit Test then Set f	1	1	Z
		BTSTS.C Ws,#bit4	Bit Test Ws to C, then Set	1	1	C
		BTSTS.Z Ws,#bit4	Bit Test Ws to Z, then Set	1	1	Z
14	CALL	CALL lit23	Call subroutine	2	2	None
		CALL Wn	Call indirect subroutine	1	2	None
15	CLR	CLR f	f = 0x0000	1	1	None
		CLR WREG	WREG = 0x0000	1	1	None
		CLR Ws	Ws = 0x0000	1	1	None
		CLR Acc,Wx,Wxd,Wy,Wyd,AWB	Clear Accumulator	1	1	OA,OB,SA,SB
16	CLRWDT	CLRWDT	Clear Watchdog Timer	1	1	WDTO,Sleep
17	COM	COM f	$f = \overline{f}$	1	1	N,Z
		COM f,WREG	$WREG = \overline{f}$	1	1	N,Z
		COM Ws,Wd	$Wd = \overline{Ws}$	1	1	N,Z
18	CP	CP f	Compare f with WREG	1	1	C,DC,N,OV,Z
		CP Wb,#lit5	Compare Wb with lit5	1	1	C,DC,N,OV,Z
		CP Wb,Ws	Compare Wb with Ws (Wb - Ws)	1	1	C,DC,N,OV,Z
19	CP0	CP0 f	Compare f with 0x0000	1	1	C,DC,N,OV,Z
		CP0 Ws	Compare Ws with 0x0000	1	1	C,DC,N,OV,Z
20	CPB	CPB f	Compare f with WREG, with Borrow	1	1	C,DC,N,OV,Z
		CPB Wb,#lit5	Compare Wb with lit5, with Borrow	1	1	C,DC,N,OV,Z
		CPB Wb,Ws	Compare Wb with Ws, with Borrow ($Wb - Ws - \overline{C}$)	1	1	C,DC,N,OV,Z
21	CPSEQ	CPSEQ Wb, Wn	Compare Wb with Wn, skip if =	1	1 (2 or 3)	None
22	CPSGT	CPSGT Wb, Wn	Compare Wb with Wn, skip if >	1	1 (2 or 3)	None
23	CPSLT	CPSLT Wb, Wn	Compare Wb with Wn, skip if <	1	1 (2 or 3)	None
24	CPSNE	CPSNE Wb, Wn	Compare Wb with Wn, skip if ≠	1	1 (2 or 3)	None
25	DAW	DAW Wn	Wn = decimal adjust Wn	1	1	C
26	DEC	DEC f	f = f -1	1	1	C,DC,N,OV,Z
		DEC f,WREG	WREG = f -1	1	1	C,DC,N,OV,Z
		DEC Ws,Wd	Wd = Ws - 1	1	1	C,DC,N,OV,Z
27	DEC2	DEC2 f	f = f -2	1	1	C,DC,N,OV,Z
		DEC2 f,WREG	WREG = f -2	1	1	C,DC,N,OV,Z
		DEC2 Ws,Wd	Wd = Ws - 2	1	1	C,DC,N,OV,Z
28	DISI	DISI #lit14	Disable Interrupts for k instruction cycles	1	1	None

Downloaded from Arrow.com.

TABLE 21-2: INSTRUCTION SET OVERVIEW (CONTINUED)

Base Instr #	Assembly Mnemonic	Assembly Syntax	Description	# of Words	# of Cycles	Status Flags Affected
29	DIV	DIV.S Wm,Wn	Signed 16/16-bit Integer Divide	1	18	N,Z,C,OV
		DIV.SD Wm,Wn	Signed 32/16-bit Integer Divide	1	18	N,Z,C,OV
		DIV.U Wm,Wn	Unsigned 16/16-bit Integer Divide	1	18	N,Z,C,OV
		DIV.UD Wm,Wn	Unsigned 32/16-bit Integer Divide	1	18	N,Z,C,OV
30	DIVF	DIVF Wm,Wn	Signed 16/16-bit Fractional Divide	1	18	N,Z,C,OV
31	DO	DO #lit14,Expr	Do code to PC + Expr, lit14 + 1 times	2	2	None
		DO Wn,Expr	Do code to PC + Expr, (Wn) + 1 times	2	2	None
32	ED	ED Wm*Wm,Acc,Wx,Wy,Wxd	Euclidean Distance (no accumulate)	1	1	OA,OB,OAB, SA,SB,SAB
33	EDAC	EDAC Wm*Wm,Acc,Wx,Wy,Wxd	Euclidean Distance	1	1	OA,OB,OAB, SA,SB,SAB
34	EXCH	EXCH Wns,Wnd	Swap Wns with Wnd	1	1	None
35	FBCL	FBCL Ws,Wnd	Find Bit Change from Left (MSb) Side	1	1	C
36	FF1L	FF1L Ws,Wnd	Find First One from Left (MSb) Side	1	1	C
37	FF1R	FF1R Ws,Wnd	Find First One from Right (LSb) Side	1	1	C
38	GOTO	GOTO Expr	Go to address	2	2	None
		GOTO Wn	Go to indirect	1	2	None
39	INC	INC f	f = f + 1	1	1	C,DC,N,OV,Z
		INC f,WREG	WREG = f + 1	1	1	C,DC,N,OV,Z
		INC Ws,Wd	Wd = Ws + 1	1	1	C,DC,N,OV,Z
40	INC2	INC2 f	f = f + 2	1	1	C,DC,N,OV,Z
		INC2 f,WREG	WREG = f + 2	1	1	C,DC,N,OV,Z
		INC2 Ws,Wd	Wd = Ws + 2	1	1	C,DC,N,OV,Z
41	IOR	IOR f	f = f .IOR. WREG	1	1	N,Z
		IOR f,WREG	WREG = f .IOR. WREG	1	1	N,Z
		IOR #lit10,Wn	Wd = lit10 .IOR. Wd	1	1	N,Z
		IOR Wb,Ws,Wd	Wd = Wb .IOR. Ws	1	1	N,Z
		IOR Wb,#lit5,Wd	Wd = Wb .IOR. lit5	1	1	N,Z
42	LAC	LAC Wso,#Slit4,Acc	Load Accumulator	1	1	OA,OB,OAB, SA,SB,SAB
43	LNK	LNK #lit14	Link frame pointer	1	1	None
44	LSR	LSR f	f = Logical Right Shift f	1	1	C,N,OV,Z
		LSR f,WREG	WREG = Logical Right Shift f	1	1	C,N,OV,Z
		LSR Ws,Wd	Wd = Logical Right Shift Ws	1	1	C,N,OV,Z
		LSR Wb,Wns,Wnd	Wnd = Logical Right Shift Wb by Wns	1	1	N,Z
		LSR Wb,#lit5,Wnd	Wnd = Logical Right Shift Wb by lit5	1	1	N,Z
45	MAC	MAC Wm*Wn,Acc,Wx,Wxd,Wy,Wyd, AWB	Multiply and Accumulate	1	1	OA,OB,OAB, SA,SB,SAB
		MAC Wm*Wm,Acc,Wx,Wxd,Wy,Wyd	Square and Accumulate	1	1	OA,OB,OAB, SA,SB,SAB
46	MOV	MOV f,Wn	Move f to Wn	1	1	None
		MOV f	Move f to f	1	1	N,Z
		MOV f,WREG	Move f to WREG	1	1	N,Z
		MOV #lit16,Wn	Move 16-bit literal to Wn	1	1	None
		MOV.b #lit8,Wn	Move 8-bit literal to Wn	1	1	None
		MOV Wn,f	Move Wn to f	1	1	None
		MOV Wso,Wdo	Move Ws to Wd	1	1	None
		MOV WREG,f	Move WREG to f	1	1	N,Z
		MOV.D Wns,Wd	Move Double from W(ns):W(ns + 1) to Wd	1	2	None
		MOV.D Ws,Wnd	Move Double from Ws to W(nd + 1):W(nd)	1	2	None
47	MOVSAC	MOVSAC Acc,Wx,Wxd,Wy,Wyd,AWB	Prefetch and store accumulator	1	1	None

© 2011 Microchip Technology Inc.

Downloaded from Arrow.com.

TABLE 21-2: INSTRUCTION SET OVERVIEW (CONTINUED)

Base Instr #	Assembly Mnemonic	Assembly Syntax	Description	# of Words	# of Cycles	Status Flags Affected
48	MPY	MPY Wm*Wn,Acc,Wx,Wxd,Wy,Wyd	Multiply Wm by Wn to Accumulator	1	1	OA,OB,OAB, SA,SB,SAB
		MPY Wm*Wm,Acc,Wx,Wxd,Wy,Wyd	Square Wm to Accumulator	1	1	OA,OB,OAB, SA,SB,SAB
49	MPY.N	MPY.N Wm*Wn,Acc,Wx,Wxd,Wy,Wyd	-(Multiply Wm by Wn) to Accumulator	1	1	None
50	MSC	MSC Wm*Wm,Acc,Wx,Wxd,Wy,Wyd , AWB	Multiply and Subtract from Accumulator	1	1	OA,OB,OAB, SA,SB,SAB
51	MUL	MUL.SS Wb,Ws,Wnd	{Wnd + 1, Wnd} = signed(Wb) * signed(Ws)	1	1	None
		MUL.SU Wb,Ws,Wnd	{Wnd + 1, Wnd} = signed(Wb) * unsigned(Ws)	1	1	None
		MUL.US Wb,Ws,Wnd	{Wnd + 1, Wnd} = unsigned(Wb) * signed(Ws)	1	1	None
		MUL.UU Wb,Ws,Wnd	{Wnd + 1, Wnd} = unsigned(Wb) * unsigned(Ws)	1	1	None
		MUL.SU Wb,#lit5,Wnd	{Wnd + 1, Wnd} = signed(Wb) * unsigned(lit5)	1	1	None
		MUL.UU Wb,#lit5,Wnd	{Wnd + 1, Wnd} = unsigned(Wb) * unsigned(lit5)	1	1	None
		MUL f	W3:W2 = f * WREG	1	1	None
52	NEG	NEG Acc	Negate Accumulator	1	1	OA,OB,OAB, SA,SB,SAB
		NEG f	f = $\overline{f}$ + 1	1	1	C,DC,N,OV,Z
		NEG f,WREG	WREG = $\overline{f}$ + 1	1	1	C,DC,N,OV,Z
		NEG Ws,Wd	Wd = $\overline{Ws}$ + 1	1	1	C,DC,N,OV,Z
53	NOP	NOP	No Operation	1	1	None
		NOPR	No Operation	1	1	None
54	POP	POP f	Pop f from Top-of-Stack (TOS)	1	1	None
		POP Wdo	Pop from Top-of-Stack (TOS) to Wdo	1	1	None
		POP.D Wnd	Pop from Top-of-Stack (TOS) to W(nd):W(nd+1)	1	2	None
		POP.S	Pop Shadow Registers	1	1	All
55	PUSH	PUSH f	Push f to Top-of-Stack (TOS)	1	1	None
		PUSH Wso	Push Wso to Top-of-Stack (TOS)	1	1	None
		PUSH.D Wns	Push W(ns):W(ns+1) to Top-of-Stack (TOS)	1	2	None
		PUSH.S	Push Shadow Registers	1	1	None
56	PWRSAV	PWRSAV #lit1	Go into Sleep or Idle mode	1	1	WDTO,Sleep
57	RCALL	RCALL Expr	Relative Call	1	2	None
		RCALL Wn	Computed Call	1	2	None
58	REPEAT	REPEAT #lit14	Repeat Next Instruction lit14 + 1 times	1	1	None
		REPEAT Wn	Repeat Next Instruction (Wn) + 1 times	1	1	None
59	RESET	RESET	Software device Reset	1	1	None
60	RETFIE	RETFIE	Return from interrupt	1	3 (2)	None
61	RETLW	RETLW #lit10,Wn	Return with literal in Wn	1	3 (2)	None
62	RETURN	RETURN	Return from Subroutine	1	3 (2)	None
63	RLC	RLC f	f = Rotate Left through Carry f	1	1	C,N,Z
		RLC f,WREG	WREG = Rotate Left through Carry f	1	1	C,N,Z
		RLC Ws,Wd	Wd = Rotate Left through Carry Ws	1	1	C,N,Z
64	RLNC	RLNC f	f = Rotate Left (No Carry) f	1	1	N,Z
		RLNC f,WREG	WREG = Rotate Left (No Carry) f	1	1	N,Z
		RLNC Ws,Wd	Wd = Rotate Left (No Carry) Ws	1	1	N,Z
65	RRC	RRC f	f = Rotate Right through Carry f	1	1	C,N,Z
		RRC f,WREG	WREG = Rotate Right through Carry f	1	1	C,N,Z
		RRC Ws,Wd	Wd = Rotate Right through Carry Ws	1	1	C,N,Z

Downloaded from Arrow.com.

TABLE 21-2: INSTRUCTION SET OVERVIEW (CONTINUED)

Base Instr #	Assembly Mnemonic	Assembly Syntax		Description	# of Words	# of Cycles	Status Flags Affected
66	RRNC	RRNC	f	f = Rotate Right (No Carry) f	1	1	N,Z
		RRNC	f,WREG	WREG = Rotate Right (No Carry) f	1	1	N,Z
		RRNC	Ws,Wd	Wd = Rotate Right (No Carry) Ws	1	1	N,Z
67	SAC	SAC	Acc,#Slit4,Wdo	Store Accumulator	1	1	None
		SAC.R	Acc,#Slit4,Wdo	Store Rounded Accumulator	1	1	None
68	SE	SE	Ws,Wnd	Wnd = sign-extended Ws	1	1	C,N,Z
69	SETM	SETM	f	f = 0xFFFF	1	1	None
		SETM	WREG	WREG = 0xFFFF	1	1	None
		SETM	Ws	Ws = 0xFFFF	1	1	None
70	SFTAC	SFTAC	Acc,Wn	Arithmetic Shift Accumulator by (Wn)	1	1	OA,OB,OAB, SA,SB,SAB
		SFTAC	Acc,#Slit6	Arithmetic Shift Accumulator by Slit6	1	1	OA,OB,OAB, SA,SB,SAB
71	SL	SL	f	f = Left Shift f	1	1	C,N,OV,Z
		SL	f,WREG	WREG = Left Shift f	1	1	C,N,OV,Z
		SL	Ws,Wd	Wd = Left Shift Ws	1	1	C,N,OV,Z
		SL	Wb,Wns,Wnd	Wnd = Left Shift Wb by Wns	1	1	N,Z
		SL	Wb,#lit5,Wnd	Wnd = Left Shift Wb by lit5	1	1	N,Z
72	SUB	SUB	Acc	Subtract Accumulators	1	1	OA,OB,OAB, SA,SB,SAB
		SUB	f	f = f - WREG	1	1	C,DC,N,OV,Z
		SUB	f,WREG	WREG = f - WREG	1	1	C,DC,N,OV,Z
		SUB	#lit10,Wn	Wn = Wn - lit10	1	1	C,DC,N,OV,Z
		SUB	Wb,Ws,Wd	Wd = Wb - Ws	1	1	C,DC,N,OV,Z
		SUB	Wb,#lit5,Wd	Wd = Wb - lit5	1	1	C,DC,N,OV,Z
73	SUBB	SUBB	f	f = f - WREG - ($\overline{C}$)	1	1	C,DC,N,OV,Z
		SUBB	f,WREG	WREG = f - WREG - ($\overline{C}$)	1	1	C,DC,N,OV,Z
		SUBB	#lit10,Wn	Wn = Wn - lit10 - ($\overline{C}$)	1	1	C,DC,N,OV,Z
		SUBB	Wb,Ws,Wd	Wd = Wb - Ws - ($\overline{C}$)	1	1	C,DC,N,OV,Z
		SUBB	Wb,#lit5,Wd	Wd = Wb - lit5 - ($\overline{C}$)	1	1	C,DC,N,OV,Z
74	SUBR	SUBR	f	f = WREG - f	1	1	C,DC,N,OV,Z
		SUBR	f,WREG	WREG = WREG - f	1	1	C,DC,N,OV,Z
		SUBR	Wb,Ws,Wd	Wd = Ws - Wb	1	1	C,DC,N,OV,Z
		SUBR	Wb,#lit5,Wd	Wd = lit5 - Wb	1	1	C,DC,N,OV,Z
75	SUBBR	SUBBR	f	f = WREG - f - ($\overline{C}$)	1	1	C,DC,N,OV,Z
		SUBBR	f,WREG	WREG = WREG -f - ($\overline{C}$)	1	1	C,DC,N,OV,Z
		SUBBR	Wb,Ws,Wd	Wd = Ws - Wb - ($\overline{C}$)	1	1	C,DC,N,OV,Z
		SUBBR	Wb,#lit5,Wd	Wd = lit5 - Wb - ($\overline{C}$)	1	1	C,DC,N,OV,Z
76	SWAP	SWAP.b	Wn	Wn = nibble swap Wn	1	1	None
		SWAP	Wn	Wn = byte swap Wn	1	1	None
77	TBLRDH	TBLRDH	Ws,Wd	Read Prog<23:16> to Wd<7:0>	1	2	None
78	TBLRDL	TBLRDL	Ws,Wd	Read Prog<15:0> to Wd	1	2	None
79	TBLWTH	TBLWTH	Ws,Wd	Write Ws<7:0> to Prog<23:16>	1	2	None
80	TBLWTL	TBLWTL	Ws,Wd	Write Ws to Prog<15:0>	1	2	None
81	ULNK	ULNK		Unlink frame pointer	1	1	None
82	XOR	XOR	f	f = f .XOR. WREG	1	1	N,Z
		XOR	f,WREG	WREG = f .XOR. WREG	1	1	N,Z
		XOR	#lit10,Wn	Wd = lit10 .XOR. Wd	1	1	N,Z
		XOR	Wb,Ws,Wd	Wd = Wb .XOR. Ws	1	1	N,Z
		XOR	Wb,#lit5,Wd	Wd = Wb .XOR. lit5	1	1	N,Z
83	ZE	ZE	Ws,Wnd	Wnd = Zero-extend Ws	1	1	C,Z,N

© 2011 Microchip Technology Inc.

Downloaded from Arrow.com.

22.0 DEVELOPMENT SUPPORT

The PIC® microcontrollers and dsPIC® digital signal controllers are supported with a full range of software and hardware development tools:

- Integrated Development Environment
  - MPLAB® IDE Software
- Compilers/Assemblers/Linkers
  - MPLAB C Compiler for Various Device Families
  - HI-TECH C for Various Device Families
  - MPASM™ Assembler
  - MPLINK™ Object Linker/ MPLIB™ Object Librarian
  - MPLAB Assembler/Linker/Librarian for Various Device Families
- Simulators
  - MPLAB SIM Software Simulator
- Emulators
  - MPLAB REAL ICE™ In-Circuit Emulator
- In-Circuit Debuggers
  - MPLAB ICD 3
  - PICkit™ 3 Debug Express
- Device Programmers
  - PICkit™ 2 Programmer
  - MPLAB PM3 Device Programmer
- Low-Cost Demonstration/Development Boards, Evaluation Kits, and Starter Kits

22.1 MPLAB Integrated Development Environment Software

The MPLAB IDE software brings an ease of software development previously unseen in the 8/16/32-bit microcontroller market. The MPLAB IDE is a Windows® operating system-based application that contains:

- A single graphical interface to all debugging tools
  - Simulator
  - Programmer (sold separately)
  - In-Circuit Emulator (sold separately)
  - In-Circuit Debugger (sold separately)
- A full-featured editor with color-coded context
- A multiple project manager
- Customizable data windows with direct edit of contents
- High-level source code debugging
- Mouse over variable inspection
- Drag and drop variables from source to watch windows
- Extensive on-line help
- Integration of select third party tools, such as IAR C Compilers

The MPLAB IDE allows you to:

- Edit your source files (either C or assembly)
- One-touch compile or assemble, and download to emulator and simulator tools (automatically updates all project information)
- Debug using:
  - Source files (C or assembly)
  - Mixed C and assembly
  - Machine code

MPLAB IDE supports multiple debugging tools in a single development paradigm, from the cost-effective simulators, through low-cost in-circuit debuggers, to full-featured emulators. This eliminates the learning curve when upgrading to tools with increased flexibility and power.

Downloaded from Arrow.com.

22.2 MPLAB C Compilers for Various Device Families

The MPLAB C Compiler code development systems are complete ANSI C compilers for Microchip's PIC18, PIC24 and PIC32 families of microcontrollers and the dsPIC30 and dsPIC33 families of digital signal controllers. These compilers provide powerful integration capabilities, superior code optimization and ease of use.

For easy source level debugging, the compilers provide symbol information that is optimized to the MPLAB IDE debugger.

22.3 HI-TECH C for Various Device Families

The HI-TECH C Compiler code development systems are complete ANSI C compilers for Microchip's PIC family of microcontrollers and the dsPIC family of digital signal controllers. These compilers provide powerful integration capabilities, omniscient code generation and ease of use.

For easy source level debugging, the compilers provide symbol information that is optimized to the MPLAB IDE debugger.

The compilers include a macro assembler, linker, preprocessor, and one-step driver, and can run on multiple platforms.

22.4 MPASM Assembler

The MPASM Assembler is a full-featured, universal macro assembler for PIC10/12/16/18 MCUs.

The MPASM Assembler generates relocatable object files for the MPLINK Object Linker, Intel® standard HEX files, MAP files to detail memory usage and symbol reference, absolute LST files that contain source lines and generated machine code and COFF files for debugging.

The MPASM Assembler features include:

- Integration into MPLAB IDE projects
- User-defined macros to streamline assembly code
- Conditional assembly for multi-purpose source files
- Directives that allow complete control over the assembly process

22.5 MPLINK Object Linker/ MPLIB Object Librarian

The MPLINK Object Linker combines relocatable objects created by the MPASM Assembler and the MPLAB C18 C Compiler. It can link relocatable objects from precompiled libraries, using directives from a linker script.

The MPLIB Object Librarian manages the creation and modification of library files of precompiled code. When a routine from a library is called from a source file, only the modules that contain that routine will be linked in with the application. This allows large libraries to be used efficiently in many different applications.

The object linker/library features include:

- Efficient linking of single libraries instead of many smaller files
- Enhanced code maintainability by grouping related modules together
- Flexible creation of libraries with easy module listing, replacement, deletion and extraction

22.6 MPLAB Assembler, Linker and Librarian for Various Device Families

MPLAB Assembler produces relocatable machine code from symbolic assembly language for PIC24, PIC32 and dsPIC devices. MPLAB C Compiler uses the assembler to produce its object file. The assembler generates relocatable object files that can then be archived or linked with other relocatable object files and archives to create an executable file. Notable features of the assembler include:

- Support for the entire device instruction set
- Support for fixed-point and floating-point data
- Command line interface
- Rich directive set
- Flexible macro language
- MPLAB IDE compatibility

© 2011 Microchip Technology Inc.

Downloaded from Arrow.com.

22.7 MPLAB SIM Software Simulator

The MPLAB SIM Software Simulator allows code development in a PC-hosted environment by simulating the PIC MCUs and dsPIC® DSCs on an instruction level. On any given instruction, the data areas can be examined or modified and stimuli can be applied from a comprehensive stimulus controller. Registers can be logged to files for further run-time analysis. The trace buffer and logic analyzer display extend the power of the simulator to record and track program execution, actions on I/O, most peripherals and internal registers.

The MPLAB SIM Software Simulator fully supports symbolic debugging using the MPLAB C Compilers, and the MPASM and MPLAB Assemblers. The software simulator offers the flexibility to develop and debug code outside of the hardware laboratory environment, making it an excellent, economical software development tool.

22.8 MPLAB REAL ICE In-Circuit Emulator System

MPLAB REAL ICE In-Circuit Emulator System is Microchip's next generation high-speed emulator for Microchip Flash DSC and MCU devices. It debugs and programs PIC® Flash MCUs and dsPIC® Flash DSCs with the easy-to-use, powerful graphical user interface of the MPLAB Integrated Development Environment (IDE), included with each kit.

The emulator is connected to the design engineer's PC using a high-speed USB 2.0 interface and is connected to the target with either a connector compatible with in-circuit debugger systems (RJ11) or with the new high-speed, noise tolerant, Low-Voltage Differential Signal (LVDS) interconnection (CAT5).

The emulator is field upgradable through future firmware downloads in MPLAB IDE. In upcoming releases of MPLAB IDE, new devices will be supported, and new features will be added. MPLAB REAL ICE offers significant advantages over competitive emulators including low-cost, full-speed emulation, run-time variable watches, trace analysis, complex breakpoints, a ruggedized probe interface and long (up to three meters) interconnection cables.

22.9 MPLAB ICD 3 In-Circuit Debugger System

MPLAB ICD 3 In-Circuit Debugger System is Microchip's most cost effective high-speed hardware debugger/programmer for Microchip Flash Digital Signal Controller (DSC) and microcontroller (MCU) devices. It debugs and programs PIC® Flash microcontrollers and dsPIC® DSCs with the powerful, yet easy-to-use graphical user interface of MPLAB Integrated Development Environment (IDE).

The MPLAB ICD 3 In-Circuit Debugger probe is connected to the design engineer's PC using a high-speed USB 2.0 interface and is connected to the target with a connector compatible with the MPLAB ICD 2 or MPLAB REAL ICE systems (RJ-11). MPLAB ICD 3 supports all MPLAB ICD 2 headers.

22.10 PICkit 3 In-Circuit Debugger/ Programmer and PICkit 3 Debug Express

The MPLAB PICkit 3 allows debugging and programming of PIC® and dsPIC® Flash microcontrollers at a most affordable price point using the powerful graphical user interface of the MPLAB Integrated Development Environment (IDE). The MPLAB PICkit 3 is connected to the design engineer's PC using a full speed USB interface and can be connected to the target via an Microchip debug (RJ-11) connector (compatible with MPLAB ICD 3 and MPLAB REAL ICE). The connector uses two device I/O pins and the reset line to implement in-circuit debugging and In-Circuit Serial Programming™.

The PICkit 3 Debug Express include the PICkit 3, demo board and microcontroller, hookup cables and CDROM with user's guide, lessons, tutorial, compiler and MPLAB IDE software.

Downloaded from Arrow.com.

22.11 PICkit 2 Development Programmer/Debugger and PICkit 2 Debug Express

The PICkit™ 2 Development Programmer/Debugger is a low-cost development tool with an easy to use interface for programming and debugging Microchip's Flash families of microcontrollers. The full featured Windows® programming interface supports baseline (PIC10F, PIC12F5xx, PIC16F5xx), midrange (PIC12F6xx, PIC16F), PIC18F, PIC24, dsPIC30, dsPIC33, and PIC32 families of 8-bit, 16-bit, and 32-bit microcontrollers, and many Microchip Serial EEPROM products. With Microchip's powerful MPLAB Integrated Development Environment (IDE) the PICkit™ 2 enables in-circuit debugging on most PIC® microcontrollers. In-Circuit-Debugging runs, halts and single steps the program while the PIC microcontroller is embedded in the application. When halted at a breakpoint, the file registers can be examined and modified.

The PICkit 2 Debug Express include the PICkit 2, demo board and microcontroller, hookup cables and CDROM with user's guide, lessons, tutorial, compiler and MPLAB IDE software.

22.12 MPLAB PM3 Device Programmer

The MPLAB PM3 Device Programmer is a universal, CE compliant device programmer with programmable voltage verification at V_{DDMIN} and V_{DDMAX} for maximum reliability. It features a large LCD display (128 x 64) for menus and error messages and a modular, detachable socket assembly to support various package types. The ICSP™ cable assembly is included as a standard item. In Stand-Alone mode, the MPLAB PM3 Device Programmer can read, verify and program PIC devices without a PC connection. It can also set code protection in this mode. The MPLAB PM3 connects to the host PC via an RS-232 or USB cable. The MPLAB PM3 has high-speed communications and optimized algorithms for quick programming of large memory devices and incorporates an MMC card for file storage and data applications.

22.13 Demonstration/Development Boards, Evaluation Kits, and Starter Kits

A wide variety of demonstration, development and evaluation boards for various PIC MCUs and dsPIC DSCs allows quick application development on fully functional systems. Most boards include prototyping areas for adding custom circuitry and provide application firmware and source code for examination and modification.

The boards support a variety of features, including LEDs, temperature sensors, switches, speakers, RS-232 interfaces, LCD displays, potentiometers and additional EEPROM memory.

The demonstration and development boards can be used in teaching environments, for prototyping custom circuits and for learning about various microcontroller applications.

In addition to the PICDEM™ and dsPICDEM™ demonstration/development board series of circuits, Microchip has a line of evaluation kits and demonstration software for analog filter design, KEELOQ® security ICs, CAN, IrDA®, PowerSmart battery management, SEEVAL® evaluation system, Sigma-Delta ADC, flow rate sensing, plus many more.

Also available are starter kits that contain everything needed to experience the specified device. This usually includes a single application and debug capability, all on one board.

Check the Microchip web page (www.microchip.com) for the complete list of demonstration, development and evaluation kits.

© 2011 Microchip Technology Inc.

Downloaded from Arrow.com.

23.0 ELECTRICAL CHARACTERISTICS

This section provides an overview of dsPIC30F electrical characteristics. Additional information will be provided in future revisions of this document as it becomes available.

For detailed information about the dsPIC30F architecture and core, refer to *"dsPIC30F Family Reference Manual"* (DS70046).

Absolute maximum ratings for the dsPIC30F family are listed below. Exposure to these maximum rating conditions for extended periods may affect device reliability. Functional operation of the device at these or any other conditions above the parameters indicated in the operation listings of this specification is not implied.

Absolute Maximum Ratings(†)

Ambient temperature under bias ..... -40°C to +125°C
Storage temperature ..... -65°C to +150°C
Voltage on any pin with respect to V_{SS} (except V_{DD} and $\overline{MCLR}$)(1) ..... -0.3V to (V_{DD} + 0.3V)
Voltage on V_{DD} with respect to V_{SS} ..... -0.3V to +5.5V
Voltage on $\overline{MCLR}$ with respect to V_{SS} ..... 0V to +13.25V
Maximum current out of V_{SS} pin ..... 300 mA
Maximum current into V_{DD} pin(2) ..... 250 mA
Input clamp current, I_{IK} (V_I < 0 or V_I > V_{DD}) ..... ±20 mA
Output clamp current, I_{OK} (V_O < 0 or V_O > V_{DD}) ..... ±20 mA
Maximum output current sunk by any I/O pin ..... 25 mA
Maximum output current sourced by any I/O pin ..... 25 mA
Maximum current sunk by all ports ..... 200 mA
Maximum current sourced by all ports(2) ..... 200 mA

Note 1: Voltage spikes below V_{SS} at the $\overline{MCLR}$/V_{PP} pin, inducing currents greater than 80 mA, may cause latchup. Thus, a series resistor of 50-100Ω should be used when applying a "low" level to the $\overline{MCLR}$/V_{PP} pin, rather than pulling this pin directly to V_{SS}.

2: Maximum allowable current is a function of device maximum power dissipation. See Table 23-2 for P_{DMAX}.

†NOTICE: Stresses above those listed under "Absolute Maximum Ratings" may cause permanent damage to the device. This is a stress rating only and functional operation of the device at those or any other conditions above those indicated in the operation listings of this specification is not implied. Exposure to maximum rating conditions for extended periods may affect device reliability.

Downloaded from Arrow.com.

23.1 DC Characteristics

TABLE 23-1: OPERATING MIPS VS. VOLTAGE

VDD Range	Temp Range	Max MIPS	
		dsPIC30F601XA-30I	dsPIC30F601XA-20E
4.5-5.5V	-40°C to 85°C	30	—
4.5-5.5V	-40°C to 125°C	—	20
3.0-3.6V	-40°C to 85°C	15	—
3.0-3.6V	-40°C to 125°C	—	10
2.5-3.0V	-40°C to 85°C	10	—

TABLE 23-2: THERMAL OPERATING CONDITIONS

Rating	Symbol	Min	Typ	Max	Unit
dsPIC30F601xA-30I					
Operating Junction Temperature Range	T_J	-40	—	+125	°C
Operating Ambient Temperature Range	T_A	-40	—	+85	°C
dsPIC30F601xA-20E					
Operating Junction Temperature Range	T_J	-40	—	+150	°C
Operating Ambient Temperature Range	T_A	-40	—	+125	°C
Power Dissipation: Internal chip power dissipation: $P_{INT} = V_{DD} \times (I_{DD} - \sum I_{OH})$ I/O Pin power dissipation: $P_{I/O} = \sum(\{V_{DD} - V_{OH}\} \times I_{OH}) + \sum(V_{OL} \times I_{OL})$	P_D	$P_{INT} + P_{I/O}$			W
Maximum Allowed Power Dissipation	P_{DMAX}	$(T_J - T_A)/\theta_{JA}$			W

TABLE 23-3: THERMAL PACKAGING CHARACTERISTICS

Characteristic	Symbol	Typ	Max	Unit	Notes
Package Thermal Resistance, 80-pin TQFP (14x14x1mm)	θ_{JA}	34	—	°C/W	**1**
Package Thermal Resistance, 64-pin TQFP (14x14x1mm)	θ_{JA}	34	—	°C/W	**1**
Package Thermal Resistance, 80-pin TQFP (12x12x1mm)	θ_{JA}	39	—	°C/W	**1**
Package Thermal Resistance, 64-pin TQFP (10x10x1mm)	θ_{JA}	39	—	°C/W	**1**

Note 1: Junction to ambient thermal resistance, Theta-ja (θ_{JA}) numbers are achieved by package simulations.

© 2011 Microchip Technology Inc.

Downloaded from Arrow.com.

TABLE 23-4: DC TEMPERATURE AND VOLTAGE SPECIFICATIONS

DC CHARACTERISTICS			Standard Operating Conditions: 2.5V to 5.5V (unless otherwise stated) Operating temperature -40°C ≤TA ≤+85°C for Industrial -40°C ≤TA ≤+125°C for Extended				
Param No.	**Symbol**	**Characteristic**	**Min**	**Typ(1)**	**Max**	**Units**	**Conditions**
Operating Voltage(2)							
DC10	VDD	**Supply Voltage**	2.5	—	5.5	V	Industrial temperature
DC11	VDD	**Supply Voltage**	3.0	—	5.5	V	Extended temperature
DC12	VDR	**RAM Data Retention Voltage(3)**	1.75	—	—	V	
DC16	VPOR	**VDD Start Voltage** to ensure internal Power-on Reset signal	—	VSS	—	V	
DC17	SVDD	**VDD Rise Rate** to ensure internal Power-on Reset signal	0.05	—	—	V/ms	0-5V in 0.1 sec 0-3V in 60 ms

Note 1: Data in “Typ” column is at 5V, 25°C unless otherwise stated. Parameters are for design guidance only and are not tested.

2: These parameters are characterized but not tested in manufacturing.

3: This is the limit to which VDD can be lowered without losing RAM data.

Downloaded from Arrow.com.

TABLE 23-5: DC CHARACTERISTICS: OPERATING CURRENT (IDD)

DC CHARACTERISTICS			Standard Operating Conditions: 2.5V to 5.5V (unless otherwise stated) Operating temperature -40°C ≤TA ≤+85°C for Industrial -40°C ≤TA ≤+125°C for Extended			
Parameter No.	**Typical(1)**	**Max**	**Units**	**Conditions**		
Operating Current (IDD)(2)						
DC31a	3.1	6	mA	25°C	3.3V	0.128 MIPS LPRC (512 kHz)
DC31b	3.2	6	mA	85°C		
DC31c	3.1	6	mA	125°C		
DC31e	5.7	9	mA	25°C	5V	
DC31f	5.5	9	mA	85°C		
DC31g	5.5	9	mA	125°C		
DC30a	10	15	mA	25°C	3.3V	(1.8 MIPS) FRC (7.37 MHz)
DC30b	10	15	mA	85°C		
DC30c	10	15	mA	125°C		
DC30e	17	26	mA	25°C	5V	
DC30f	17	26	mA	85°C		
DC30g	17	26	mA	125°C		
DC23a	19	30	mA	25°C	3.3V	4 MIPS
DC23b	20	30	mA	85°C		
DC23c	20	30	mA	125°C		
DC23e	32	50	mA	25°C	5V	
DC23f	32	50	mA	85°C		
DC23g	33	50	mA	125°C		
DC24a	45	68	mA	25°C	3.3V	10 MIPS
DC24b	45	68	mA	85°C		
DC24c	46	68	mA	125°C		
DC24e	74	105	mA	25°C	5V	
DC24f	74	105	mA	85°C		
DC24g	75	105	mA	125°C		
DC27d	140	180	mA	25°C	5V	20 MIPS
DC27e	138	180	mA	85°C		
DC27f	138	180	mA	125°C		
DC29a	203	250	mA	25°C	5V	30 MIPS
DC29b	202	250	mA	85°C		

Note 1: Data in “Typ” column is at 5V, 25°C unless otherwise stated. Parameters are for design guidance only and are not tested.

2: The supply current is mainly a function of the operating voltage and frequency. Other factors such as I/O pin loading and switching rate, oscillator type, internal code execution pattern and temperature also have an impact on the current consumption. The test conditions for all IDD measurements are as follows: OSC1 driven with external square wave from rail to rail. All I/O pins are configured as Inputs and pulled to VDD. MCLR = VDD, WDT, FSCM, LVD and BOR are disabled. CPU, SRAM, Program Memory and Data Memory are operational. No peripheral modules are operating.

© 2011 Microchip Technology Inc.

Downloaded from Arrow.com.

TABLE 23-6: DC CHARACTERISTICS: IDLE CURRENT (IIDLE)

DC CHARACTERISTICS			Standard Operating Conditions: 2.5V to 5.5V (unless otherwise stated) Operating temperature -40°C ≤TA ≤+85°C for Industrial -40°C ≤TA ≤+125°C for Extended			
Parameter No.	**Typical(1)**	**Max**	**Units**	**Conditions**		
Operating Current (IIDLE)(2)						
DC51a	2.5	5	mA	25°C	3.3V	0.128 MIPS LPRC (512 kHz)
DC51b	2.6	5	mA	85°C		
DC51c	2.6	5	mA	125°C		
DC51e	5.5	8	mA	25°C	5V	
DC51f	5.3	8	mA	85°C		
DC51g	5.2	8	mA	125°C		
DC50a	6.7	13	mA	25°C	3.3V	(1.8 MIPS) FRC (7.37 MHz)
DC50b	6.7	13	mA	85°C		
DC50c	6.8	13	mA	125°C		
DC50e	8.5	19	mA	25°C	5V	
DC50f	8.5	19	mA	85°C		
DC50g	8.6	19	mA	125°C		
DC43a	8.7	20	mA	25°C	3.3V	4 MIPS
DC43b	8.7	20	mA	85°C		
DC43c	8.8	20	mA	125°C		
DC43e	14	31	mA	25°C	5V	
DC43f	14	31	mA	85°C		
DC43g	14	31	mA	125°C		
DC44a	16	37	mA	25°C	3.3V	10 MIPS
DC44b	17	37	mA	85°C		
DC44c	17	37	mA	125°C		
DC44e	28	62	mA	25°C	5V	
DC44f	28	62	mA	85°C		
DC44g	28	62	mA	125°C		
DC47d	48	110	mA	25°C	5V	20 MIPS
DC47e	49	110	mA	85°C		
DC47f	49	110	mA	125°C		
DC49a	69	150	mA	25°C	5V	30 MIPS
DC49b	70	150	mA	85°C		

Note 1: Data in “Typ” column is at 5V, 25°C unless otherwise stated. Parameters are for design guidance only and are not tested.

2: Base IIDLE current is measured with Core off, Clock on and all modules turned off.

Downloaded from Arrow.com.

TABLE 23-7: DC CHARACTERISTICS: POWER-DOWN CURRENT (IPD)

DC CHARACTERISTICS			Standard Operating Conditions: 2.5V to 5.5V (unless otherwise stated) Operating temperature -40°C ≤TA ≤+85°C for Industrial -40°C ≤TA ≤+125°C for Extended			
Parameter No.	**Typical**	**Max**	**Units**	**Conditions**		
Power Down Current (IPD)						
DC60a	0.5	—	μA	25°C	3.3V	Base Power Down Current(1)
DC60b	1	40	μA	85°C		
DC60c	24	65	μA	125°C		
DC60e	0.7	—	μA	25°C	5V	
DC60f	4	55	μA	85°C		
DC60g	35	90	μA	125°C		
DC61a	9	20	μA	25°C	3.3V	Watchdog Timer Current: ΔIWDT(2)
DC61b	9	20	μA	85°C		
DC61c	8	20	μA	125°C		
DC61e	18	40	μA	25°C	5V	
DC61f	16	40	μA	85°C		
DC61g	15	40	μA	125°C		
DC62a	4	10	μA	25°C	3.3V	Timer 1 w/32 kHz Crystal: ΔITI32(2)
DC62b	5	10	μA	85°C		
DC62c	4	10	μA	125°C		
DC62e	4	15	μA	25°C	5V	
DC62f	6	15	μA	85°C		
DC62g	5	15	μA	125°C		
DC63a	30	55	μA	25°C	3.3V	BOR On: ΔIBOR(2)
DC63b	34	55	μA	85°C		
DC63c	35	55	μA	125°C		
DC63e	36	60	μA	25°C	5V	
DC63f	39	60	μA	85°C		
DC63g	40	60	μA	125°C		
DC66a	20	35	μA	25°C	3.3V	Low Voltage Detect: ΔILVD(2)
DC66b	22	35	μA	85°C		
DC66c	23	35	μA	125°C		
DC66e	24	40	μA	25°C	5V	
DC66f	26	40	μA	85°C		
DC66g	26	40	μA	125°C		

Note 1: Base IPD is measured with all peripherals and clocks shut down. All I/Os are configured as inputs and pulled high. LVD, BOR, WDT, etc. are all switched off.

2: The Δ current is the additional current consumed when the module is enabled. This current should be added to the base IPD current.

© 2011 Microchip Technology Inc.

Downloaded from Arrow.com.

TABLE 23-8: DC CHARACTERISTICS: I/O PIN INPUT SPECIFICATIONS

DC CHARACTERISTICS			Standard Operating Conditions: 2.5V to 5.5V (unless otherwise stated) Operating temperature -40°C ≤TA ≤+85°C for Industrial -40°C ≤TA ≤+125°C for Extended				
Param No.	**Symbol**	**Characteristic**	**Min**	**Typ(1)**	**Max**	**Units**	**Conditions**
	VIL	**Input Low Voltage(2)**					
DI10		I/O pins: with Schmitt Trigger buffer	VSS	—	0.2 VDD	V	
DI15		$\overline{\text{MCLR}}$	VSS	—	0.2 VDD	V	
DI16		OSC1 (in XT, HS and LP modes)	VSS	—	0.2 VDD	V	
DI17		OSC1 (in RC mode)(3)	VSS	—	0.3 VDD	V	
DI18		SDA, SCL	VSS	—	0.3 VDD	V	SMbus disabled
DI19		SDA, SCL	VSS	—	0.8	V	SMbus enabled
	VIH	**Input High Voltage(2)**					
DI20		I/O pins: with Schmitt Trigger buffer	0.8 VDD	—	VDD	V	
DI25		$\overline{\text{MCLR}}$	0.8 VDD	—	VDD	V	
DI26		OSC1 (in XT, HS and LP modes)	0.7 VDD	—	VDD	V	
DI27		OSC1 (in RC mode)(3)	0.9 VDD	—	VDD	V	
DI28		SDA, SCL	0.7 VDD	—	VDD	V	SMbus disabled
DI29		SDA, SCL	2.1	—	VDD	V	SMbus enabled
	ICNPU	**CNxx Pull-up Current(2)**					
DI30			50	250	400	μA	VDD = 5V, VPIN = VSS
	IIL	**Input Leakage Current(2)(4)(5)**					
DI50		I/O ports	—	0.01	±1	μA	VSS ≤VPIN ≤VDD, Pin at high-impedance
DI51		Analog input pins	—	0.50	—	μA	VSS ≤VPIN ≤VDD, Pin at high-impedance
DI55		$\overline{\text{MCLR}}$	—	0.05	±5	μA	VSS ≤VPIN ≤VDD
DI56		OSC1	—	0.05	±5	μA	VSS ≤VPIN ≤VDD, XT, HS and LP Osc mode

Note 1: Data in "Typ" column is at 5V, 25°C unless otherwise stated. Parameters are for design guidance only and are not tested.

2: These parameters are characterized but not tested in manufacturing.

3: In RC oscillator configuration, the OSC1/CLKI pin is a Schmitt Trigger input. It is not recommended that the dsPIC30F device be driven with an external clock while in RC mode.

4: The leakage current on the $\overline{\text{MCLR}}$ pin is strongly dependent on the applied voltage level. The specified levels represent normal operating conditions. Higher leakage current may be measured at different input voltages.

5: Negative current is defined as current sourced by the pin.

Downloaded from Arrow.com.

TABLE 23-9: DC CHARACTERISTICS: I/O PIN OUTPUT SPECIFICATIONS

DC CHARACTERISTICS			Standard Operating Conditions: 2.5V to 5.5V (unless otherwise stated) Operating temperature -40°C ≤TA ≤+85°C for Industrial -40°C ≤TA ≤+125°C for Extended				
Param No.	**Symbol**	**Characteristic**	**Min**	**Typ(1)**	**Max**	**Units**	**Conditions**
	VOL	**Output Low Voltage(2)**					
DO10		I/O ports	—	—	0.6	V	IOL = 8.5 mA, VDD = 5V
			—	—	0.15	V	IOL = 2.0 mA, VDD = 3V
DO16		OSC2/CLKOUT	—	—	0.6	V	IOL = 1.6 mA, VDD = 5V
		(RC or EC Osc mode)	—	—	0.72	V	IOL = 2.0 mA, VDD = 3V
	VOH	**Output High Voltage(2)**					
DO20		I/O ports	VDD – 0.7	—	—	V	IOH = -3.0 mA, VDD = 5V
			VDD – 0.2	—	—	V	IOH = -2.0 mA, VDD = 3V
DO26		OSC2/CLKOUT	VDD – 0.7	—	—	V	IOH = -1.3 mA, VDD = 5V
		(RC or EC Osc mode)	VDD – 0.1	—	—	V	IOH = -2.0 mA, VDD = 3V
		Capacitive Loading Specs on Output Pins(2)					
DO50	COSC2	OSC2/SOSC2 pin	—	—	15	pF	In XTL, XT, HS and LP modes when external clock is used to drive OSC1.
DO56	CIO	All I/O pins and OSC2	—	—	50	pF	RC or EC Osc mode
DO58	CB	SCL, SDA	—	—	400	pF	In I²C™ mode

Note 1: Data in "Typ" column is at 5V, 25°C unless otherwise stated. Parameters are for design guidance only and are not tested.

2: These parameters are characterized but not tested in manufacturing.

FIGURE 23-1: LOW-VOLTAGE DETECT CHARACTERISTICS

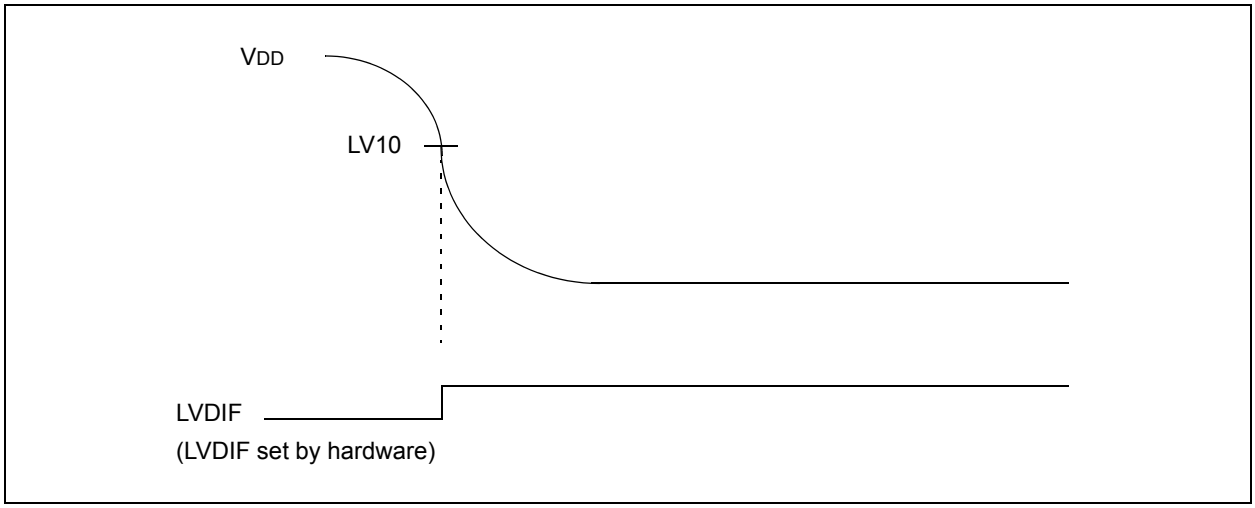

© 2011 Microchip Technology Inc.

Downloaded from Arrow.com.

TABLE 23-10: ELECTRICAL CHARACTERISTICS: LVDL

DC CHARACTERISTICS			Standard Operating Conditions: 2.5V to 5.5V (unless otherwise stated) Operating temperature -40°C ≤TA ≤+85°C for Industrial -40°C ≤TA ≤+125°C for Extended					
Param No.	**Symbol**	**Characteristic(1)**		**Min**	**Typ**	**Max**	**Units**	**Conditions**
LV10	VPLVD	LVDL Voltage on VDD transition high to low	LVDL = 0000(2)	—	—	—	V	
			LVDL = 0001(2)	—	—	—	V	
			LVDL = 0010(2)	—	—	—	V	
			LVDL = 0011(2)	—	—	—	V	
			LVDL = 0100	2.50	—	2.65	V	
			LVDL = 0101	2.70	—	2.86	V	
			LVDL = 0110	2.80	—	2.97	V	
			LVDL = 0111	3.00	—	3.18	V	
			LVDL = 1000	3.30	—	3.50	V	
			LVDL = 1001	3.50	—	3.71	V	
			LVDL = 1010	3.60	—	3.82	V	
			LVDL = 1011	3.80	—	4.03	V	
			LVDL = 1100	4.00	—	4.24	V	
			LVDL = 1101	4.20	—	4.45	V	
			LVDL = 1110	4.50	—	4.77	V	
LV15	VLVDIN	External LVD input pin threshold voltage	LVDL = 1111	—	—	—	V	

Note 1: These parameters are characterized but not tested in manufacturing.
2: These values not in usable operating range.

FIGURE 23-2: BROWN-OUT RESET CHARACTERISTICS

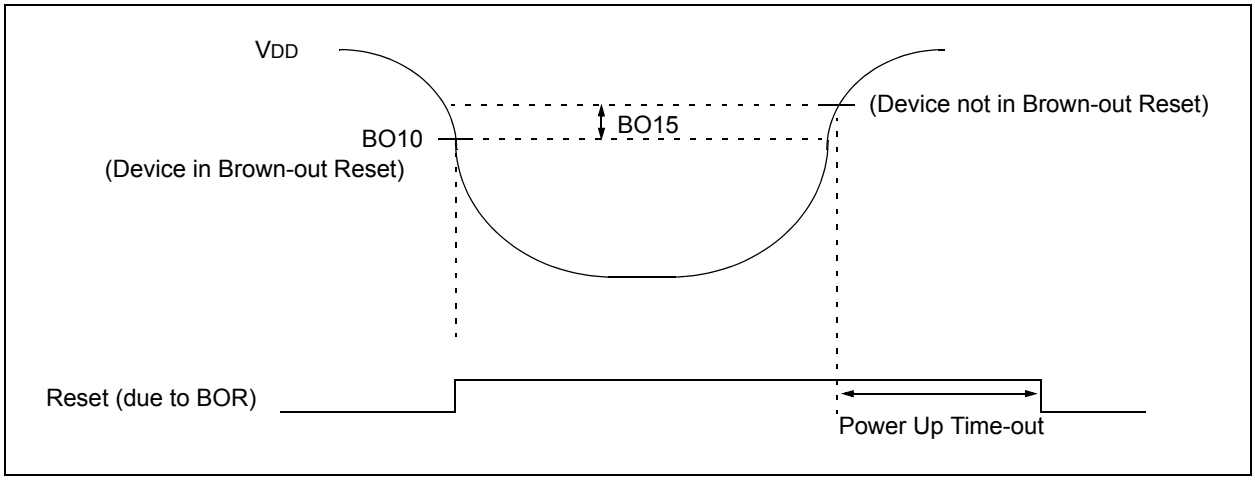

Downloaded from Arrow.com.

TABLE 23-11: ELECTRICAL CHARACTERISTICS: BOR

DC CHARACTERISTICS			Standard Operating Conditions: 2.5V to 5.5V (unless otherwise stated) Operating temperature -40°C ≤TA ≤+85°C for Industrial -40°C ≤TA ≤+125°C for Extended					
Param No.	**Symbol**	**Characteristic**		**Min**	**Typ(1)**	**Max**	**Units**	**Conditions**
BO10	VBOR	BOR Voltage(2) on VDD transition high to low	BORV = 11(3)	—	—	—	V	Not in operating range
			BORV = 10	2.6	—	2.71	V	
			BORV = 01	4.1	—	4.4	V	
			BORV = 00	4.58	—	4.73	V	
BO15	VBHYS			—	5	—	mV	

Note 1: Data in "Typ" column is at 5V, 25°C unless otherwise stated. Parameters are for design guidance only and are not tested.
2: These parameters are characterized but not tested in manufacturing.
3: '11' values not in usable operating range.

TABLE 23-12: DC CHARACTERISTICS: PROGRAM AND EEPROM

DC CHARACTERISTICS			Standard Operating Conditions: 2.5V to 5.5V (unless otherwise stated) Operating temperature -40°C ≤TA ≤+85°C for Industrial -40°C ≤TA ≤+125°C for Extended				
Param No.	**Symbol**	**Characteristic**	**Min**	**Typ(1)**	**Max**	**Units**	**Conditions**
		Data EEPROM Memory(2)					
D120	ED	Byte Endurance	100K	1M	—	E/W	-40° C ≤TA ≤+85°C
D121	VDRW	VDD for Read/Write	VMIN	—	5.5	V	Using EECON to read/write VMIN = Minimum operating voltage
D122	TDEW	Erase/Write Cycle Time	0.8	2	2.6	ms	RTSP
D123	TRETD	Characteristic Retention	40	100	—	Year	Provided no other specifications are violated
D124	IDEW	IDD During Programming	—	10	30	mA	Row Erase
		Program FLASH Memory(2)					
D130	EP	Cell Endurance	10K	100K	—	E/W	-40° C ≤TA ≤+85°C
D131	VPR	VDD for Read	VMIN	—	5.5	V	VMIN = Minimum operating voltage
D132	VEB	VDD for Bulk Erase	4.5	—	5.5	V	
D133	VPEW	VDD for Erase/Write	3.0	—	5.5	V	
D134	TPEW	Erase/Write Cycle Time	0.8	2	2.6	ms	RTSP
D135	TRETD	Characteristic Retention	40	100	—	Year	Provided no other specifications are violated
D137	IPEW	IDD During Programming	—	10	30	mA	Row Erase
D138	IEB	IDD During Programming	—	10	30	mA	Bulk Erase

Note 1: Data in "Typ" column is at 5V, 25°C unless otherwise stated.
2: These parameters are characterized but not tested in manufacturing.

© 2011 Microchip Technology Inc.

Downloaded from Arrow.com.

23.2 AC Characteristics and Timing Parameters

The information contained in this section defines dsPIC30F AC characteristics and timing parameters.

TABLE 23-13: TEMPERATURE AND VOLTAGE SPECIFICATIONS – AC

AC CHARACTERISTICS	**Standard Operating Conditions: 2.5V to 5.5V (unless otherwise stated)** Operating temperature -40°C ≤TA ≤+85°C for Industrial -40°C ≤TA ≤+125°C for Extended Operating voltage VDD range as described in Table 23-1.

FIGURE 23-3: LOAD CONDITIONS FOR DEVICE TIMING SPECIFICATIONS

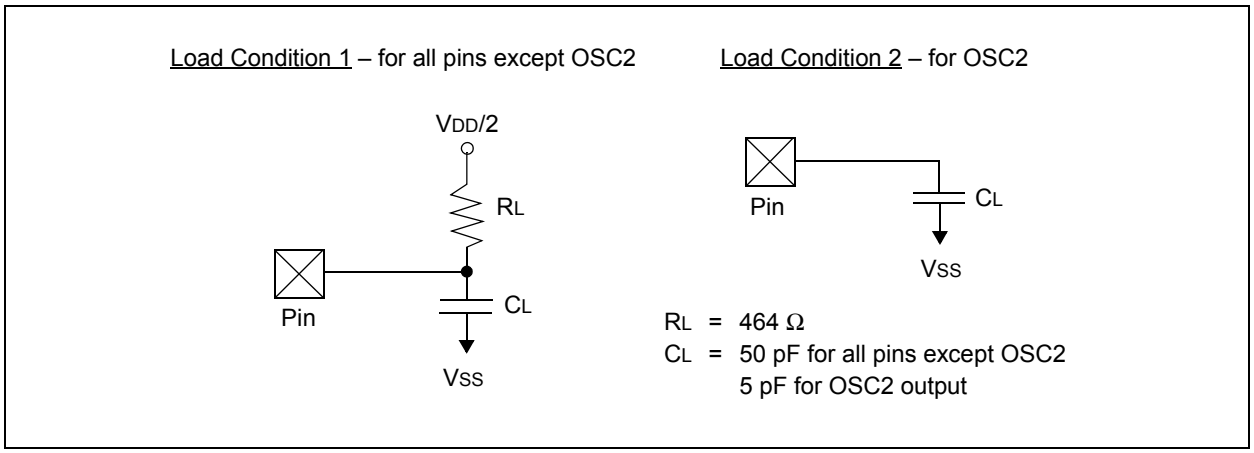

FIGURE 23-4: EXTERNAL CLOCK TIMING

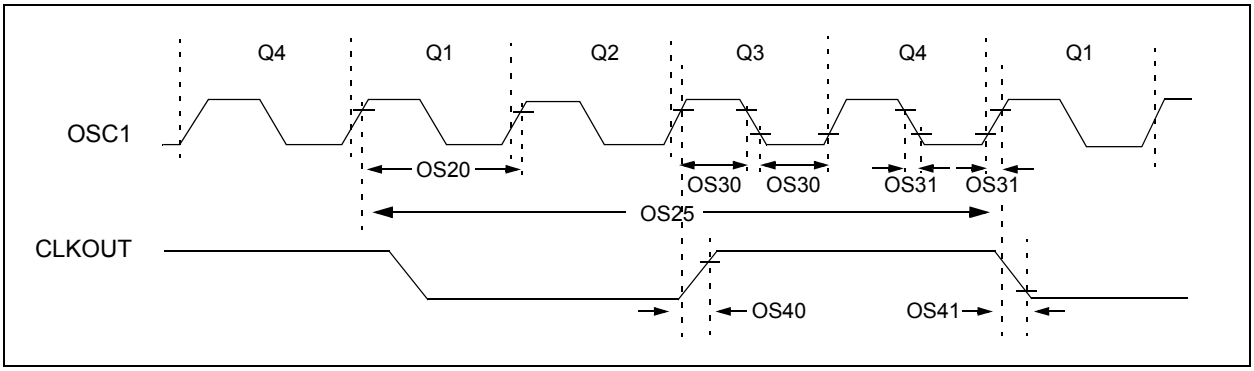

Downloaded from Arrow.com.

TABLE 23-14: EXTERNAL CLOCK TIMING REQUIREMENTS

AC CHARACTERISTICS			Standard Operating Conditions: 2.5V to 5.5V (unless otherwise stated) Operating temperature -40°C ≤TA ≤+85°C for Industrial -40°C ≤TA ≤+125°C for Extended				
Param No.	**Symbol**	**Characteristic**	**Min**	**Typ(1)**	**Max**	**Units**	**Conditions**
OS10	FOSC	External CLKIN Frequency(2) (External clocks allowed only in EC mode)	DC	—	40	MHz	EC
			4	—	10	MHz	EC with 4x PLL
			4	—	10	MHz	EC with 8x PLL
			4	—	7.5(3)	MHz	EC with 16x PLL
		Oscillator Frequency(2)	DC	—	4	MHz	RC
			0.4	—	4	MHz	XTL
			4	—	10	MHz	XT
			4	—	10	MHz	XT with 4x PLL
			4	—	10	MHz	XT with 8x PLL
			4	—	7.5(3)	MHz	XT with 16x PLL
			10	—	25	MHz	HS
			10	—	20(4)	MHz	HS/2 with 4x PLL
			10	—	20(4)	MHz	HS/2 with 8x PLL
			10	—	15(3)	MHz	HS/2 with 16x PLL
			12(4)	—	25	MHz	HS/3 with 4x PLL
			12(4)	—	25	MHz	HS/3 with 8x PLL
			12(4)	—	22.5(3)	MHz	HS/3 with 16x PLL
			—	32.768	—	kHz	LP
OS20	TOSC	TOSC = 1/FOSC	—	—	—	—	See parameter OS10 for FOSC value
OS25	TCY	Instruction Cycle Time(2)(5)	33	—	DC	ns	See Table 23-16
OS30	TosL, TosH	External Clock(2) in (OSC1) High or Low Time	.45 x TOSC	—	—	ns	EC
OS31	TosR, TosF	External Clock(2) in (OSC1) Rise or Fall Time	—	—	20	ns	EC
OS40	TckR	CLKOUT Rise Time(2)(6)	—	—	—	ns	See parameter DO31
OS41	TckF	CLKOUT Fall Time(2)(6)	—	—	—	ns	See parameter DO32

Note 1: Data in “Typ” column is at 5V, 25°C unless otherwise stated. Parameters are for design guidance only and are not tested.

2: These parameters are characterized but not tested in manufacturing.

3: Limited by the PLL output frequency range.

4: Limited by the PLL input frequency range.

5: Instruction cycle period (TCY) equals four times the input oscillator time base period. All specified values are based on characterization data for that particular oscillator type under standard operating conditions with the device executing code. Exceeding these specified limits may result in an unstable oscillator operation and/or higher than expected current consumption. All devices are tested to operate at “Min.” values with an external clock applied to the OSC1/CLKI pin. When an external clock input is used, the “Max.” cycle time limit is “DC” (no clock) for all devices.

6: Measurements are taken in EC or ERC modes. The CLKOUT signal is measured on the OSC2 pin. CLKOUT is low for the Q1-Q2 period (1/2 TCY) and high for the Q3-Q4 period (1/2 TCY).

© 2011 Microchip Technology Inc.

Downloaded from Arrow.com.

TABLE 23-15: PLL CLOCK TIMING SPECIFICATIONS (V_{DD} = 2.5 TO 5.5 V)

AC CHARACTERISTICS			Standard Operating Conditions: 2.5V to 5.5V (unless otherwise stated) Operating temperature -40°C ≤TA ≤+85°C for Industrial -40°C ≤TA ≤+125°C for Extended				
Param No.	**Symbol**	**Characteristic(1)**	**Min**	**Typ(2)**	**Max**	**Units**	**Conditions**
OS50	FPLLI	PLL Input Frequency Range(2)	4	—	10	MHz	EC with 4x PLL
			4	—	10	MHz	EC with 8x PLL
			4	—	7.5(4)	MHz	EC with 16x PLL
			4	—	10	MHz	XT with 4x PLL
			4	—	10	MHz	XT with 8x PLL
			4	—	7.5(4)	MHz	XT with 16x PLL
			5(3)	—	10	MHz	HS/2 with 4x PLL
			5(3)	—	10	MHz	HS/2 with 8x PLL
			5(3)	—	7.5(4)	MHz	HS/2 with 16x PLL
			4	—	8.33(3)	MHz	HS/3 with 4x PLL
			4	—	8.33(3)	MHz	HS/3 with 8x PLL
			4	—	7.5(4)	MHz	HS/3 with 16x PLL
OS51	FSYS	On-Chip PLL Output(2)	16	—	120	MHz	EC, XT, HS/2, HS/3 modes with PLL
OS52	TLOC	PLL Start-up Time (Lock Time)	—	20	50	μs	

Note 1: These parameters are characterized but not tested in manufacturing.

2: Data in "Typ" column is at 5V, 25°C unless otherwise stated. Parameters are for design guidance only and are not tested.

3: Limited by oscillator frequency range.

4: Limited by device operating frequency range.

TABLE 23-16: PLL JITTER

AC CHARACTERISTICS			Standard Operating Conditions: 2.5V to 5.5V (unless otherwise stated) Operating temperature -40°C ≤TA ≤+85°C for Industrial -40°C ≤TA ≤+125°C for Extended				
Param No.	**Characteristic**	**Min**	**Typ(1)**	**Max**	**Units**	**Conditions**	
OS61	x4 PLL	—	0.251	0.413	%	-40°C ≤TA ≤+85°C	VDD = 3.0 to 3.6V
		—	0.251	0.413	%	-40°C ≤TA ≤+125°C	VDD = 3.0 to 3.6V
		—	0.256	0.47	%	-40°C ≤TA ≤+85°C	VDD = 4.5 to 5.5V
		—	0.256	0.47	%	-40°C ≤TA ≤+125°C	VDD = 4.5 to 5.5V
	x8 PLL	—	0.355	0.584	%	-40°C ≤TA ≤+85°C	VDD = 3.0 to 3.6V
		—	0.355	0.584	%	-40°C ≤TA ≤+125°C	VDD = 3.0 to 3.6V
		—	0.362	0.664	%	-40°C ≤TA ≤+85°C	VDD = 4.5 to 5.5V
		—	0.362	0.664	%	-40°C ≤TA ≤+125°C	VDD = 4.5 to 5.5V
	x16 PLL	—	0.67	0.92	%	-40°C ≤TA ≤+85°C	VDD = 3.0 to 3.6V
		—	0.632	0.956	%	-40°C ≤TA ≤+85°C	VDD = 4.5 to 5.5V
		—	0.632	0.956	%	-40°C ≤TA ≤+125°C	VDD = 4.5 to 5.5V

Note 1: These parameters are characterized but not tested in manufacturing.

Downloaded from Arrow.com.

TABLE 23-17: INTERNAL CLOCK TIMING EXAMPLES

Clock Oscillator Mode	FOSC (MHz)(1)	TCY (µsec)(2)	MIPS(3) w/o PLL	MIPS(3) w PLL x4	MIPS(3) w PLL x8	MIPS(3) w PLL x16
EC	0.200	20.0	0.05	—	—	—
	4	1.0	1.0	4.0	8.0	16.0
	10	0.4	2.5	10.0	20.0	—
	25	0.16	6.25	—	—	—
XT	4	1.0	1.0	4.0	8.0	16.0
	10	0.4	2.5	10.0	20.0	—

Note 1: Assumption: Oscillator Postscaler is divide by 1.
2: Instruction Execution Cycle Time: TCY = 1/MIPS.
3: Instruction Execution Frequency: MIPS = (FOSC * PLLx)/4.

TABLE 23-18: AC CHARACTERISTICS: INTERNAL FRC ACCURACY

AC CHARACTERISTICS		Standard Operating Conditions: 2.5V to 5.5V (unless otherwise stated) Operating temperature -40°C ≤TA ≤+85°C for Industrial -40°C ≤TA ≤+125°C for Extended					
Param No.	**Characteristic**	**Min**	**Typ**	**Max**	**Units**	**Conditions**	
	Internal FRC Accuracy @ FRC Freq. = 7.37 MHz(1)						
OS63	FRC	—	—	±2.00	%	-40°C ≤TA ≤+85°C	VDD = 3.0-5.5V
		—	—	±5.00	%	-40°C ≤TA ≤+125°C	VDD = 3.0-5.5V

Note 1: Frequency calibrated at 7.372 MHz ±2%, 25°C and 5V. TUN bits (OSCCON<3:0>) can be used to compensate for temperature drift.

TABLE 23-19: AC CHARACTERISTICS: INTERNAL LPRC ACCURACY

AC CHARACTERISTICS		Standard Operating Conditions: 2.5V to 5.5V (unless otherwise stated) Operating temperature -40°C ≤TA ≤+85°C for Industrial -40°C ≤TA ≤+125°C for Extended				
Param No.	**Characteristic**	**Min**	**Typ**	**Max**	**Units**	**Conditions**
	LPRC @ Freq. = 512 kHz(1)					
OS65A		-50	—	+50	%	VDD = 5.0V, ±10%
OS65B		-60	—	+60	%	VDD = 3.3V, ±10%
OS65C		-70	—	+70	%	VDD = 2.5V

Note 1: Change of LPRC frequency as VDD changes.

© 2011 Microchip Technology Inc.

Downloaded from Arrow.com.

FIGURE 23-5: CLKOUT AND I/O TIMING CHARACTERISTICS

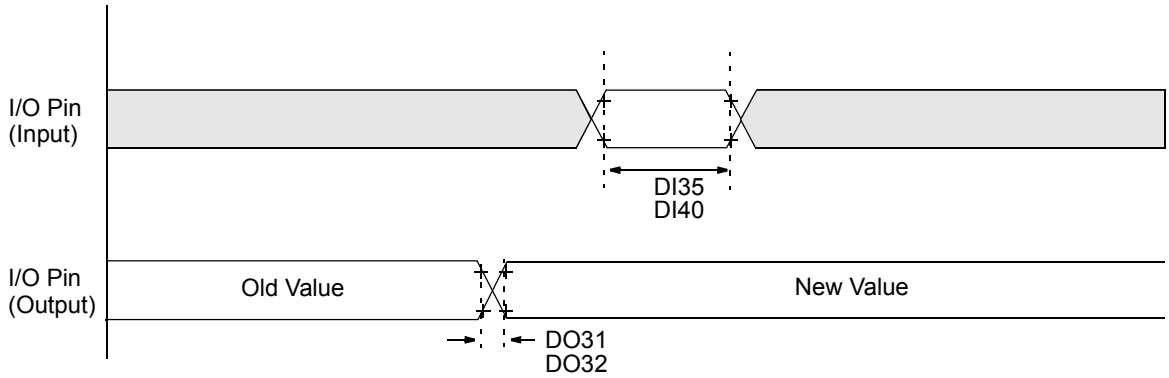

Note: Refer to Figure 23-3 for load conditions.

TABLE 23-20: CLKOUT AND I/O TIMING REQUIREMENTS

AC CHARACTERISTICS			Standard Operating Conditions: 2.5V to 5.5V (unless otherwise stated) Operating temperature -40°C ≤TA ≤+85°C for Industrial -40°C ≤TA ≤+125°C for Extended				
Param No.	**Symbol**	**Characteristic(1)(2)(3)**	**Min**	**Typ(4)**	**Max**	**Units**	**Conditions**
DO31	TIOR	Port output rise time	—	7	20	ns	
DO32	TIOF	Port output fall time	—	7	20	ns	
DI35	TINP	INTx pin high or low time (output)	20	—	—	ns	
DI40	TRBP	CNx high or low time (input)	2 TCY	—	—	ns	

Note 1: These parameters are asynchronous events not related to any internal clock edges
2: Measurements are taken in RC mode and EC mode where CLKOUT output is 4 x TOSC.
3: These parameters are characterized but not tested in manufacturing.
4: Data in “Typ” column is at 5V, 25°C unless otherwise stated.

Downloaded from Arrow.com.

FIGURE 23-6: RESET, WATCHDOG TIMER, OSCILLATOR START-UP TIMER AND POWER-UP TIMER TIMING CHARACTERISTICS

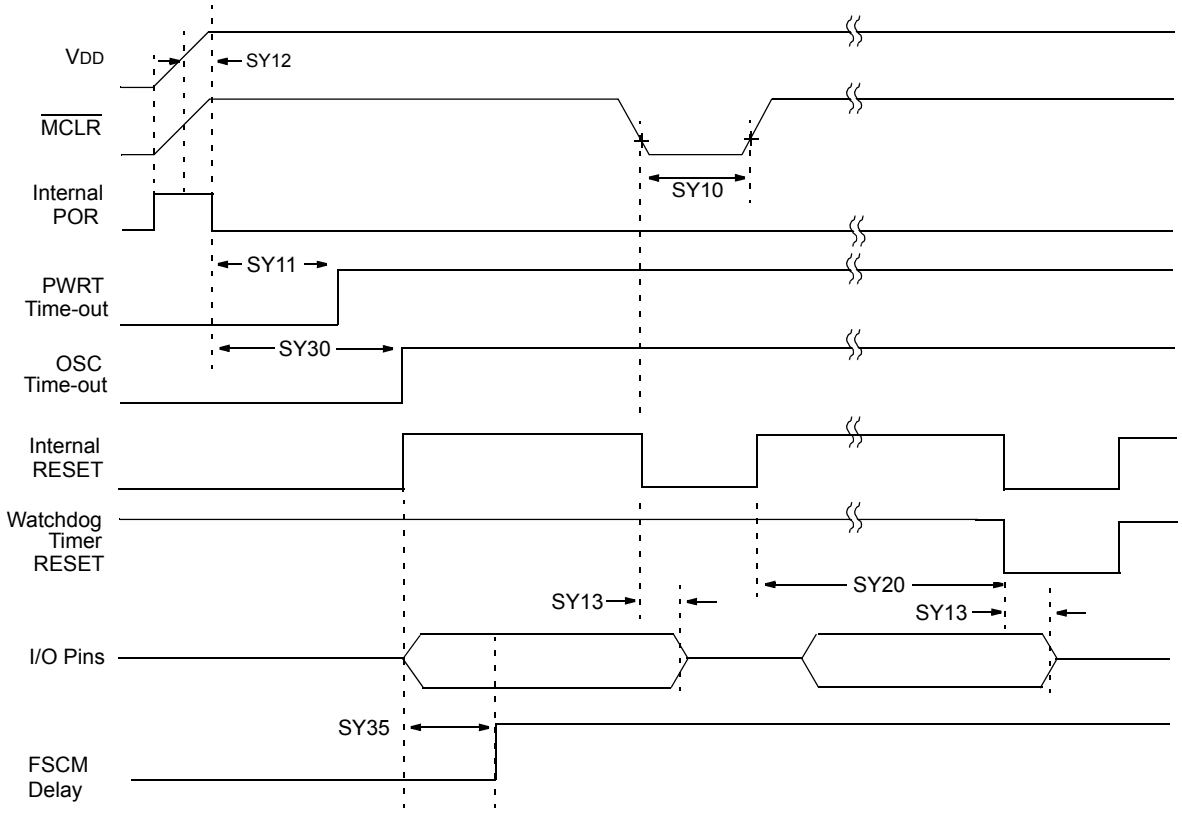

Note: Refer to Figure 23-3 for load conditions.

© 2011 Microchip Technology Inc.

Downloaded from Arrow.com.

TABLE 23-21: RESET, WATCHDOG TIMER, OSCILLATOR START-UP TIMER, POWER-UP TIMER AND BROWN-OUT RESET TIMING REQUIREMENTS

AC CHARACTERISTICS			Standard Operating Conditions: 2.5V to 5.5V (unless otherwise stated) Operating temperature -40°C ≤TA ≤+85°C for Industrial -40°C ≤TA ≤+125°C for Extended				
Param No.	**Symbol**	**Characteristic(1)**	**Min**	**Typ(2)**	**Max**	**Units**	**Conditions**
SY10	TmcL	$\overline{\text{MCLR}}$ Pulse Width (low)	2	—	—	µs	-40°C to +85°C
SY11	TPWRT	Power-up Timer Period	2 8 32	4 16 64	6 24 96	ms	-40°C to +85°C, VDD = 5V User programmable
SY12	TPOR	Power-on Reset Delay(3)	3	10	30	µs	-40°C to +85°C
SY13	TIOZ	I/O high-impedance from $\overline{\text{MCLR}}$ Low or Watchdog Timer Reset	—	0.8	1.0	µs	
SY20	TWDT1 TWDT2 TWDT3	Watchdog Timer Time-out Period (No Prescaler)	0.6 0.8 1.0	2.0 2.0 2.0	3.4 3.2 3.0	ms ms ms	VDD = 2.5V VDD = 3.3V, ±10% VDD = 5V, ±10%
SY25	TBOR	Brown-out Reset Pulse Width(4)	100	—	—	µs	VDD ≤VBOR (D034)
SY30	TOST	Oscillation Start-up Timer Period	—	1024 TOSC	—	—	TOSC = OSC1 period
SY35	TFSCM	Fail-Safe Clock Monitor Delay	—	500	900	µs	-40°C to +85°C

Note 1: These parameters are characterized but not tested in manufacturing.
2: Data in “Typ” column is at 5V, 25°C unless otherwise stated.
3: Characterized by design but not tested
4: Refer to Figure 23-2 and Table 23-11 for BOR.

Downloaded from Arrow.com.

FIGURE 23-7: BAND GAP START-UP TIME CHARACTERISTICS

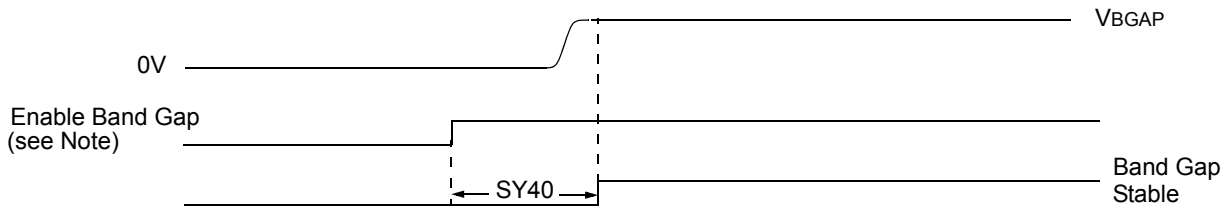

Note: Set LVDEN bit (RCON<12>) or BOREN bit (FBORPOR<7>).

TABLE 23-22: BAND GAP START-UP TIME REQUIREMENTS

AC CHARACTERISTICS			Standard Operating Conditions: 2.5V to 5.5V (unless otherwise stated) Operating temperature -40°C ≤TA ≤+85°C for Industrial -40°C ≤TA ≤+125°C for Extended				
Param No.	**Symbol**	**Characteristic(1)**	**Min**	**Typ(2)**	**Max**	**Units**	**Conditions**
SY40	TBGAP	Band Gap Start-up Time	—	40	65	μs	Defined as the time between the instant that the band gap is enabled and the moment that the band gap reference voltage is stable. RCON<13> Status bit

Note 1: These parameters are characterized but not tested in manufacturing.
2: Data in “Typ” column is at 5V, 25°C unless otherwise stated.

© 2011 Microchip Technology Inc.

Downloaded from Arrow.com.

FIGURE 23-8: TYPE A, B AND C TIMER EXTERNAL CLOCK TIMING CHARACTERISTICS

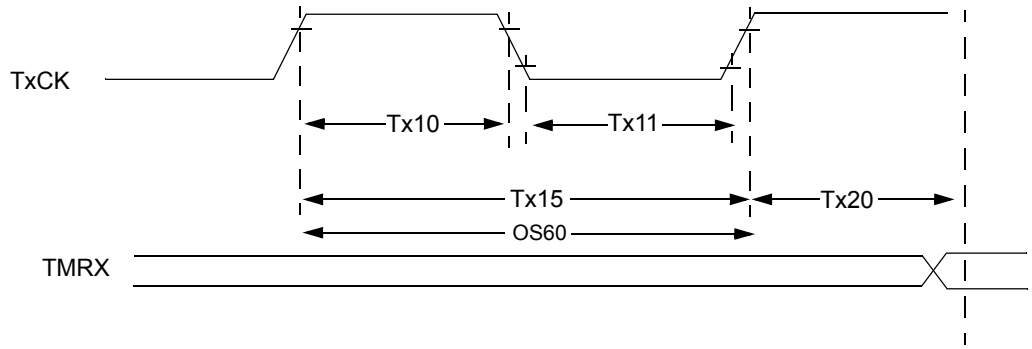

Note: Refer to Figure 23-3 for load conditions.

TABLE 23-23: TYPE A TIMER (TIMER1) EXTERNAL CLOCK TIMING REQUIREMENTS(1)

AC CHARACTERISTICS				Standard Operating Conditions: 2.5V to 5.5V (unless otherwise stated) Operating temperature -40°C ≤TA ≤+85°C for Industrial -40°C ≤TA ≤+125°C for Extended				
Param No.	**Symbol**	**Characteristic**		**Min**	**Typ**	**Max**	**Units**	**Conditions**
TA10	TTXH	TxCK High Time	Synchronous, no prescaler	0.5 TCY + 20	—	—	ns	Must also meet parameter TA15
			Synchronous, with prescaler	10	—	—	ns	
			Asynchronous	10	—	—	ns	
TA11	TTXL	TxCK Low Time	Synchronous, no prescaler	0.5 TCY + 20	—	—	ns	Must also meet parameter TA15
			Synchronous, with prescaler	10	—	—	ns	
			Asynchronous	10	—	—	ns	
TA15	TTXP	TxCK Input Period	Synchronous, no prescaler	TCY + 10	—	—	ns	
			Synchronous, with prescaler	Greater of: 20 ns or (TCY + 40)/N	—	—	—	N = prescale value (1, 8, 64, 256)
			Asynchronous	20	—	—	ns	
OS60	Ft1	SOSC1/T1CK oscillator input frequency range (oscillator enabled by setting bit TCS (T1CON, bit 1))		DC	—	50	kHz	
TA20	TCKEXTMRL	Delay from External TxCK Clock Edge to Timer Increment		0.5 TCY	—	1.5 TCY	—	

Note 1: Timer1 is a Type A.

Downloaded from Arrow.com.

TABLE 23-24: TYPE B TIMER (TIMER2 AND TIMER4) EXTERNAL CLOCK TIMING REQUIREMENTS(1)

AC CHARACTERISTICS				Standard Operating Conditions: 2.5V to 5.5V (unless otherwise stated) Operating temperature -40°C ≤TA ≤+85°C for Industrial -40°C ≤TA ≤+125°C for Extended				
Param No.	**Symbol**	**Characteristic**		**Min**	**Typ**	**Max**	**Units**	**Conditions**
TB10	TtxH	TxCK High Time	Synchronous, no prescaler	0.5 TCY + 20	—	—	ns	Must also meet parameter TB15
			Synchronous, with prescaler	10	—	—	ns	
TB11	TtxL	TxCK Low Time	Synchronous, no prescaler	0.5 TCY + 20	—	—	ns	Must also meet parameter TB15
			Synchronous, with prescaler	10	—	—	ns	
TB15	TtxP	TxCK Input Period	Synchronous, no prescaler	TCY + 10	—	—	ns	N = prescale value (1, 8, 64, 256)
			Synchronous, with prescaler	Greater of: 20 ns or (TCY + 40)/N				
TB20	TCKEXT-MRL	Delay from External TxCK Clock Edge to Timer Increment		0.5 TCY	—	1.5 TCY	—	

Note 1: Timer2 and Timer4 are Type B.

TABLE 23-25: TYPE C TIMER (TIMER3 AND TIMER5) EXTERNAL CLOCK TIMING REQUIREMENTS(1)

AC CHARACTERISTICS				Standard Operating Conditions: 2.5V to 5.5V (unless otherwise stated) Operating temperature -40°C ≤TA ≤+85°C for Industrial -40°C ≤TA ≤+125°C for Extended				
Param No.	**Symbol**	**Characteristic**		**Min**	**Typ**	**Max**	**Units**	**Conditions**
TC10	TtxH	TxCK High Time	Synchronous	0.5 TCY + 20	—	—	ns	Must also meet parameter TC15
TC11	TtxL	TxCK Low Time	Synchronous	0.5 TCY + 20	—	—	ns	Must also meet parameter TC15
TC15	TtxP	TxCK Input Period	Synchronous, no prescaler	TCY + 10	—	—	ns	N = prescale value (1, 8, 64, 256)
			Synchronous, with prescaler	Greater of: 20 ns or (TCY + 40)/N				
TC20	TCKEXT-MRL	Delay from External TxCK Clock Edge to Timer Increment		0.5 TCY	—	1.5 TCY	—	

Note 1: Timer3 and Timer5 are Type C.

© 2011 Microchip Technology Inc.

Downloaded from Arrow.com.

FIGURE 23-9: INPUT CAPTURE (CAPx) TIMING CHARACTERISTICS

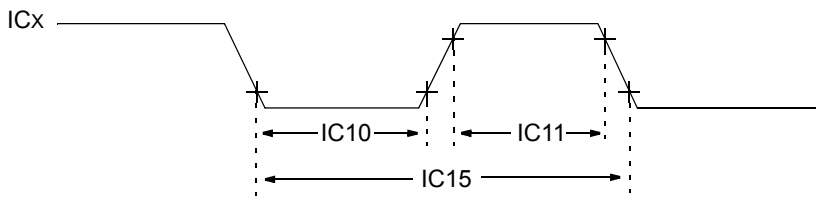

Note: Refer to Figure 23-3 for load conditions.

TABLE 23-26: INPUT CAPTURE TIMING REQUIREMENTS

AC CHARACTERISTICS				Standard Operating Conditions: 2.5V to 5.5V (unless otherwise stated) Operating temperature -40°C ≤TA ≤+85°C for Industrial -40°C ≤TA ≤+125°C for Extended			
Param No.	**Symbol**	**Characteristic(1)**		**Min**	**Max**	**Units**	**Conditions**
IC10	TccL	ICx Input Low Time	No Prescaler	0.5 TCY + 20	—	ns	
			With Prescaler	10	—	ns	
IC11	TccH	ICx Input High Time	No Prescaler	0.5 TCY + 20	—	ns	
			With Prescaler	10	—	ns	
IC15	TccP	ICx Input Period		(2 TCY + 40)/N	—	ns	N = prescale value (1, 4, 16)

Note 1: These parameters are characterized but not tested in manufacturing.

FIGURE 23-10: OUTPUT COMPARE MODULE (OCx) TIMING CHARACTERISTICS

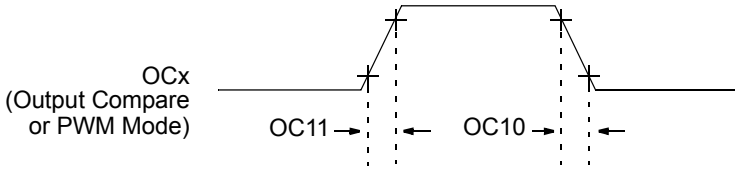

Note: Refer to Figure 23-3 for load conditions.

TABLE 23-27: OUTPUT COMPARE MODULE TIMING REQUIREMENTS

AC CHARACTERISTICS			Standard Operating Conditions: 2.5V to 5.5V (unless otherwise stated) Operating temperature -40°C ≤TA ≤+85°C for Industrial -40°C ≤TA ≤+125°C for Extended				
Param No.	**Symbol**	**Characteristic(1)**	**Min**	**Typ(2)**	**Max**	**Units**	**Conditions**
OC10	TccF	OCx Output Fall Time	—	—	—	ns	See Parameter DO32
OC11	TccR	OCx Output Rise Time	—	—	—	ns	See Parameter DO31

Note 1: These parameters are characterized but not tested in manufacturing.
2: Data in "Typ" column is at 5V, 25°C unless otherwise stated. Parameters are for design guidance only and are not tested.

Downloaded from Arrow.com.

FIGURE 23-11: OC/PWM MODULE TIMING CHARACTERISTICS

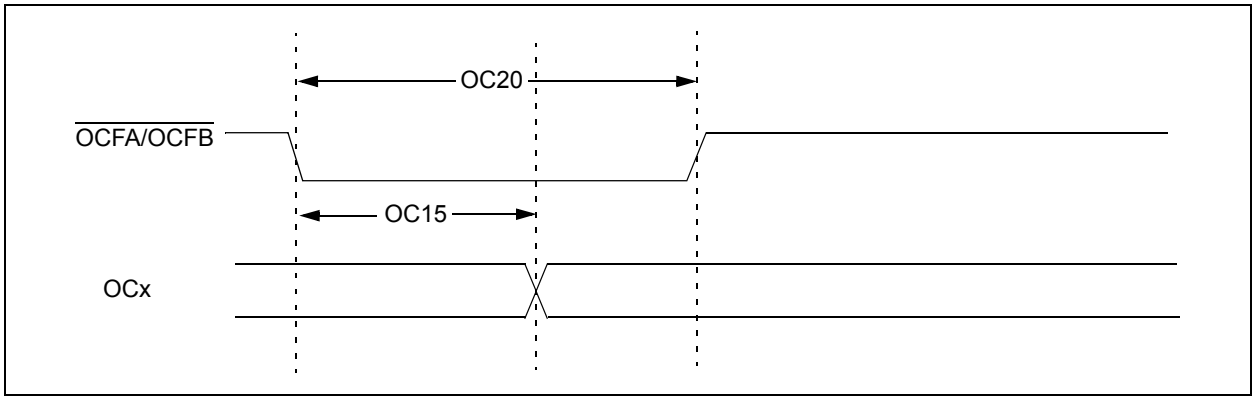

TABLE 23-28: SIMPLE OC/PWM MODE TIMING REQUIREMENTS

AC CHARACTERISTICS				Standard Operating Conditions: 2.5V to 5.5V (unless otherwise stated) Operating temperature -40°C ≤TA ≤+85°C for Industrial -40°C ≤TA ≤+125°C for Extended			
Param No.	**Symbol**	**Characteristic(1)**	**Min**	**Typ(2)**	**Max**	**Units**	**Conditions**
OC15	TFD	Fault Input to PWM I/O Change	—	—	50	ns	
OC20	TFLT	Fault Input Pulse Width	50	—	—	ns	

Note 1: These parameters are characterized but not tested in manufacturing.
2: Data in “Typ” column is at 5V, 25°C unless otherwise stated. Parameters are for design guidance only and are not tested.

© 2011 Microchip Technology Inc.

Downloaded from Arrow.com.

FIGURE 23-12: DCI MODULE (MULTICHANNEL, I²S MODES) TIMING CHARACTERISTICS

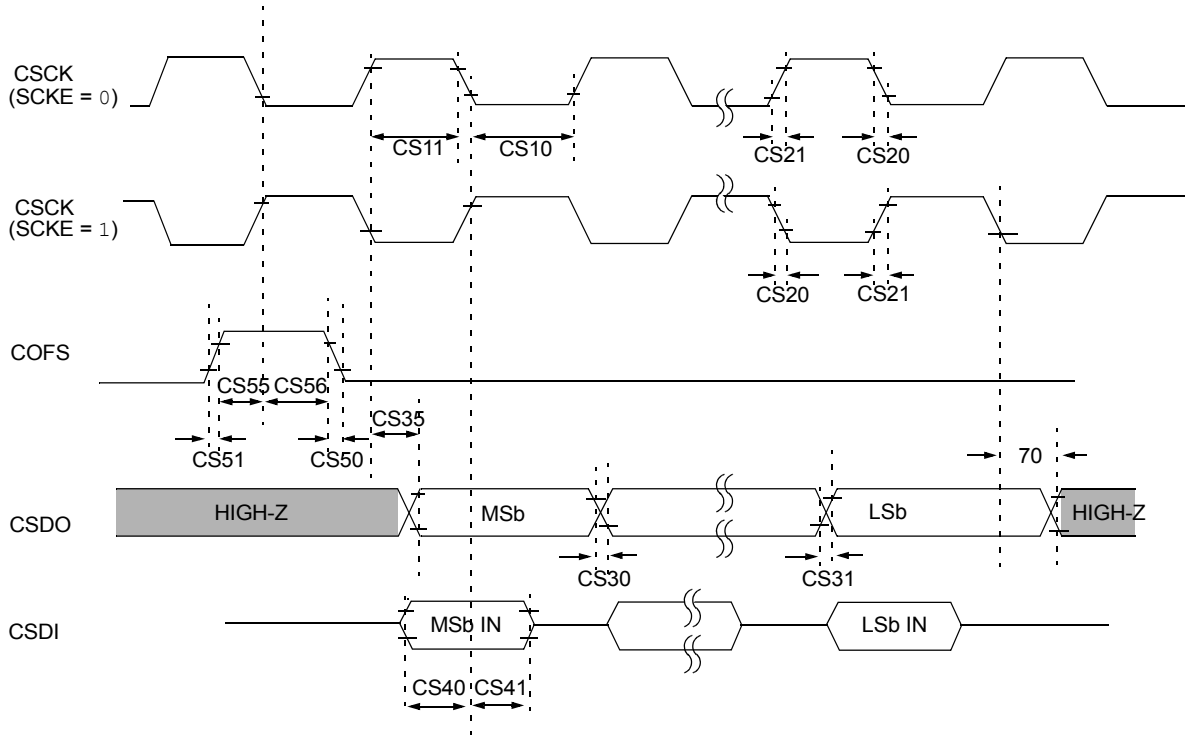

Note: Refer to Figure 23-3 for load conditions.

Downloaded from Arrow.com.

TABLE 23-29: DCI MODULE (MULTICHANNEL, I²S MODES) TIMING REQUIREMENTS

AC CHARACTERISTICS			Standard Operating Conditions: 2.5V to 5.5V (unless otherwise stated) Operating temperature -40°C ≤TA ≤+85°C for Industrial -40°C ≤TA ≤+125°C for Extended				
Param No.	**Symbol**	**Characteristic(1)**	**Min**	**Typ(2)**	**Max**	**Units**	**Conditions**
CS10	TCSCKL	CSCK Input Low Time (CSCK pin is an input)	TCY/2 + 20	—	—	ns	
		CSCK Output Low Time(3) (CSCK pin is an output)	30	—	—	ns	
CS11	TCSCKH	CSCK Input High Time (CSCK pin is an input)	TCY/2 + 20	—	—	ns	
		CSCK Output High Time(3) (CSCK pin is an output)	30	—	—	ns	
CS20	TCSCKF	CSCK Output Fall Time(4) (CSCK pin is an output)	—	10	25	ns	
CS21	TCSCKR	CSCK Output Rise Time(4) (CSCK pin is an output)	—	10	25	ns	
CS30	TCSDOF	CSDO Data Output Fall Time(4)	—	10	25	ns	
CS31	TCSDOR	CSDO Data Output Rise Time(4)	—	10	25	ns	
CS35	TDV	Clock edge to CSDO data valid	—	—	10	ns	
CS36	TDIV	Clock edge to CSDO tri-stated	10	—	20	ns	
CS40	TCSDI	Setup time of CSDI data input to CSCK edge (CSCK pin is input or output)	20	—	—	ns	
CS41	THCSDI	Hold time of CSDI data input to CSCK edge (CSCK pin is input or output)	20	—	—	ns	
CS50	TCOFSF	COFS Fall Time (COFS pin is output)(4)	—	10	25	ns	
CS51	TCOFSR	COFS Rise Time (COFS pin is output)(4)	—	10	25	ns	
CS55	TSCOFS	Setup time of COFS data input to CSCK edge (COFS pin is input)	20	—	—	ns	
CS56	THCOFS	Hold time of COFS data input to CSCK edge (COFS pin is input)	20	—	—	ns	

Note 1: These parameters are characterized but not tested in manufacturing.
2: Data in "Typ" column is at 5V, 25°C unless otherwise stated. Parameters are for design guidance only and are not tested.
3: The minimum clock period for CSCK is 100 ns. Therefore, the clock generated in Master mode must not violate this specification.
4: Assumes 50 pF load on all DCI pins.

© 2011 Microchip Technology Inc.

Downloaded from Arrow.com.

FIGURE 23-13: DCI MODULE (AC-LINK MODE) TIMING CHARACTERISTICS

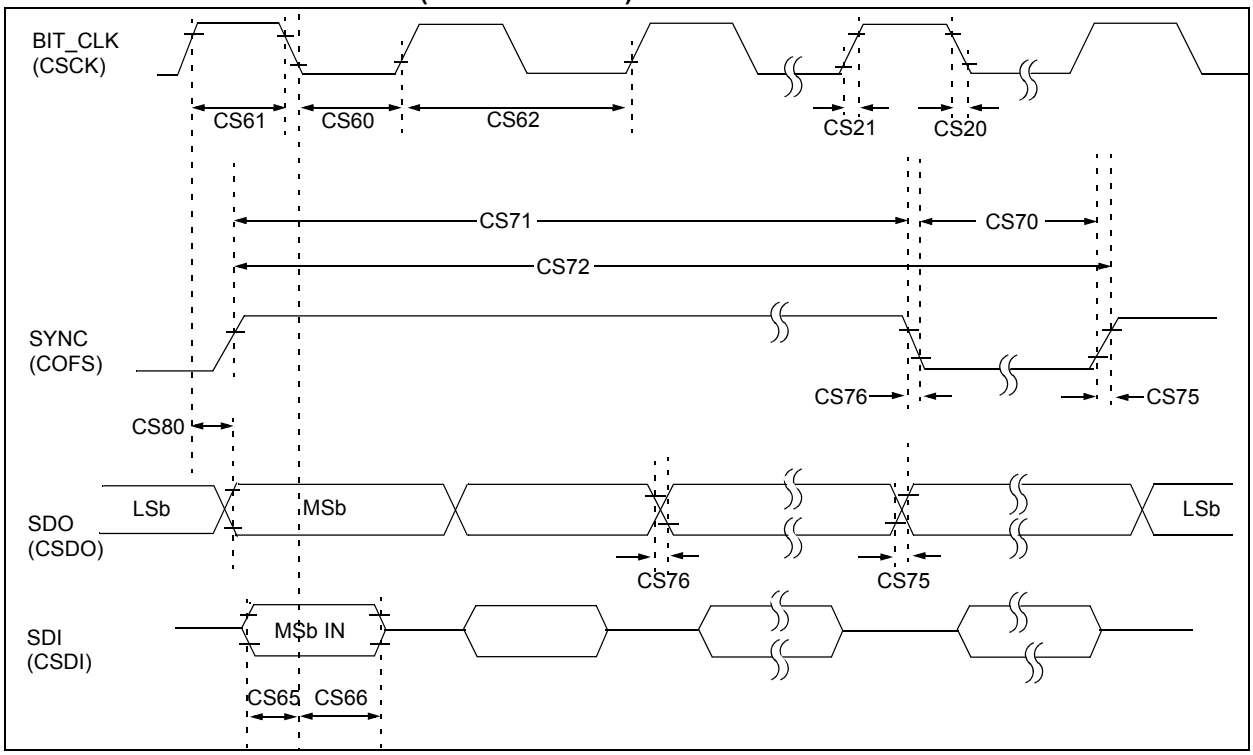

TABLE 23-30: DCI MODULE (AC-LINK MODE) TIMING REQUIREMENTS

AC CHARACTERISTICS			Standard Operating Conditions: 2.5V to 5.5V (unless otherwise stated) Operating temperature -40°C ≤TA ≤+85°C for Industrial -40°C ≤TA ≤+125°C for Extended				
Param No.	**Symbol**	**Characteristic(1)(2)**	**Min**	**Typ(3)**	**Max**	**Units**	**Conditions**
CS60	TBCLKL	BIT_CLK Low Time	36	40.7	45	ns	
CS61	TBCLKH	BIT_CLK High Time	36	40.7	45	ns	
CS62	TBCLK	BIT_CLK Period	—	81.4	—	ns	Bit clock is input
CS65	TSACL	Input Setup Time to Falling Edge of BIT_CLK	—	—	10	ns	
CS66	THACL	Input Hold Time from Falling Edge of BIT_CLK	—	—	10	ns	
CS70	TSYNCLO	SYNC Data Output Low Time	—	19.5	—	µs	**Note 1**
CS71	TSYNCHI	SYNC Data Output High Time	—	1.3	—	µs	**Note 1**
CS72	TSYNC	SYNC Data Output Period	—	20.8	—	µs	**Note 1**
CS75	TRACL	Rise Time, SYNC, SDATA_OUT	—	10	25	ns	CLOAD = 50 pF, VDD = 5V
CS76	TFACL	Fall Time, SYNC, SDATA_OUT	—	10	25	ns	CLOAD = 50 pF, VDD = 5V
CS80	TOVDACL	Output valid delay from rising edge of BIT_CLK	—	—	15	ns	

Note 1: These parameters are characterized but not tested in manufacturing.
2: These values assume BIT_CLK frequency is 12.288 MHz.
3: Data in “Typ” column is at 5V, 25°C unless otherwise stated. Parameters are for design guidance only and are not tested.

Downloaded from Arrow.com.

FIGURE 23-14: SPI MODULE MASTER MODE (CKE = 0) TIMING CHARACTERISTICS

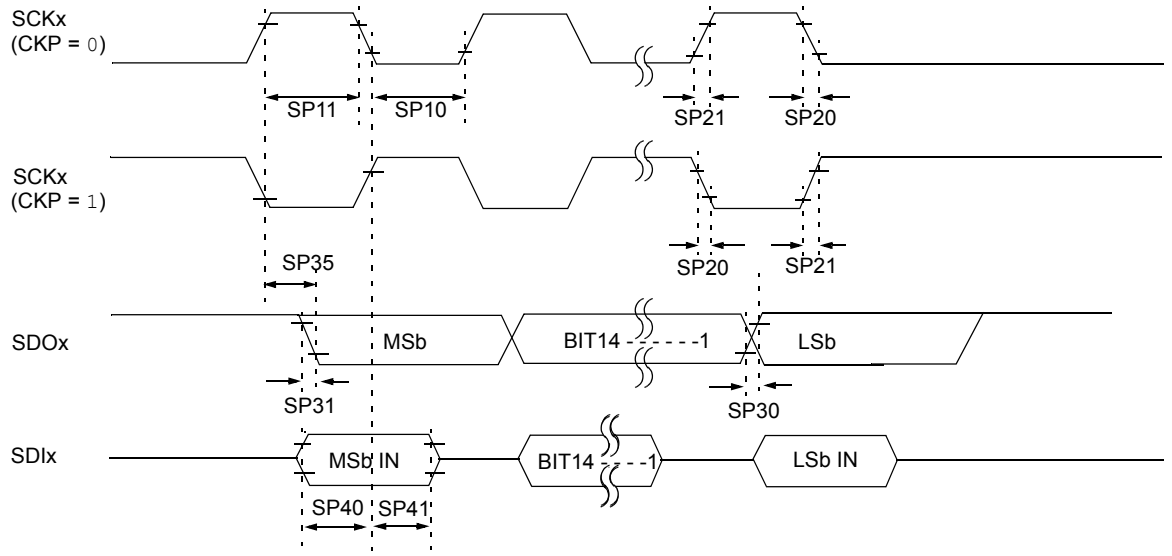

Note: Refer to Figure 23-3 for load conditions.

TABLE 23-31: SPI MASTER MODE (CKE = 0) TIMING REQUIREMENTS

AC CHARACTERISTICS			Standard Operating Conditions: 2.5V to 5.5V (unless otherwise stated) Operating temperature -40°C ≤TA ≤+85°C for Industrial -40°C ≤TA ≤+125°C for Extended				
Param No.	**Symbol**	**Characteristic(1)**	**Min**	**Typ(2)**	**Max**	**Units**	**Conditions**
SP10	TscL	SCKx Output Low Time(3)	TCY / 2	—	—	ns	
SP11	TscH	SCKx Output High Time(3)	TCY/2	—	—	ns	
SP20	TscF	SCKx Output Fall Time(4)	—	—	—	ns	See parameter DO32
SP21	TscR	SCKx Output Rise Time(4)	—	—	—	ns	See parameter DO31
SP30	TdoF	SDOx Data Output Fall Time(4)	—	—	—	ns	See parameter DO32
SP31	TdoR	SDOx Data Output Rise Time(4)	—	—	—	ns	See parameter DO31
SP35	TscH2doV, TscL2doV	SDOx Data Output Valid after SCKx Edge	—	—	30	ns	
SP40	TdiV2scH, TdiV2scL	Setup Time of SDIx Data Input to SCKx Edge	20	—	—	ns	
SP41	TscH2diL, TscL2diL	Hold Time of SDIx Data Input to SCKx Edge	20	—	—	ns	

Note 1: These parameters are characterized but not tested in manufacturing.
2: Data in "Typ" column is at 5V, 25°C unless otherwise stated. Parameters are for design guidance only and are not tested.
3: The minimum clock period for SCK is 100 ns. Therefore, the clock generated in Master mode must not violate this specification.
4: Assumes 50 pF load on all SPI pins.

© 2011 Microchip Technology Inc.

Downloaded from Arrow.com.

FIGURE 23-15: SPI MODULE MASTER MODE (CKE =1) TIMING CHARACTERISTICS

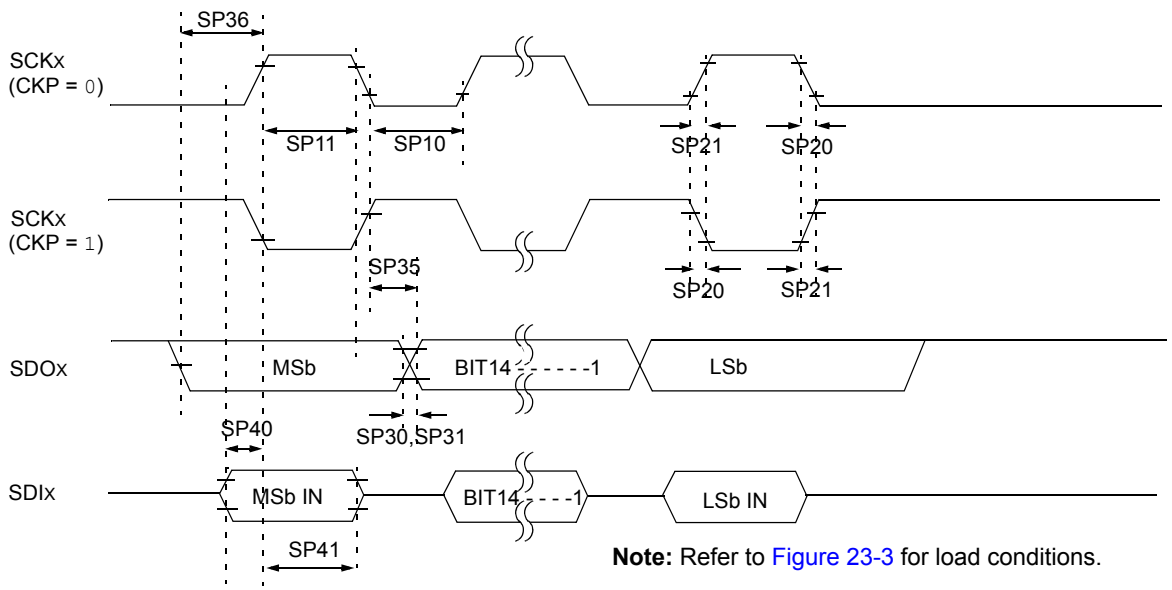

Note: Refer to Figure 23-3 for load conditions.

TABLE 23-32: SPI MODULE MASTER MODE (CKE = 1) TIMING REQUIREMENTS

AC CHARACTERISTICS			Standard Operating Conditions: 2.5V to 5.5V (unless otherwise stated) Operating temperature -40°C ≤TA ≤+85°C for Industrial -40°C ≤TA ≤+125°C for Extended				
Param No.	**Symbol**	**Characteristic(1)**	**Min**	**Typ(2)**	**Max**	**Units**	**Conditions**
SP10	TscL	SCKx output low time(3)	TCY/2	—	—	ns	
SP11	TscH	SCKx output high time(3)	TCY/2	—	—	ns	
SP20	TscF	SCKx output fall time(4)	—	—	—	ns	See parameter DO32
SP21	TscR	SCKx output rise time(4)	—	—	—	ns	See parameter DO31
SP30	TdoF	SDOx data output fall time(4)	—	—	—	ns	See parameter DO32
SP31	TdoR	SDOx data output rise time(4)	—	—	—	ns	See parameter DO31
SP35	TscH2doV, TscL2doV	SDOx data output valid after SCKx edge	—	—	30	ns	
SP36	TdoV2sc, TdoV2scL	SDOx data output setup to first SCKx edge	30	—	—	ns	
SP40	TdiV2scH, TdiV2scL	Setup time of SDIx data input to SCKx edge	20	—	—	ns	
SP41	TscH2diL, TscL2diL	Hold time of SDIx data input to SCKx edge	20	—	—	ns	

Note 1: These parameters are characterized but not tested in manufacturing.
2: Data in "Typ" column is at 5V, 25°C unless otherwise stated. Parameters are for design guidance only and are not tested.
3: The minimum clock period for SCK is 100 ns. Therefore, the clock generated in Master mode must not violate this specification.
4: Assumes 50 pF load on all SPI pins.

Downloaded from Arrow.com.

FIGURE 23-16: SPI MODULE SLAVE MODE (CKE = 0) TIMING CHARACTERISTICS

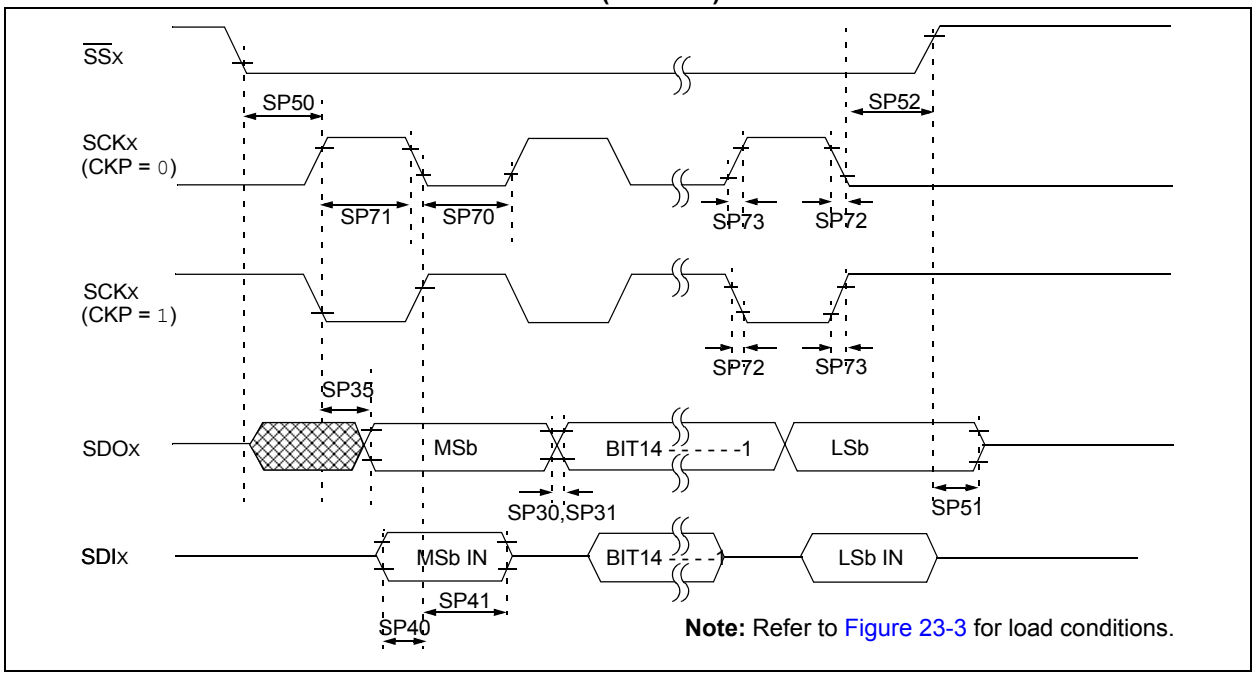

TABLE 23-33: SPI MODULE SLAVE MODE (CKE = 0) TIMING REQUIREMENTS

AC CHARACTERISTICS			Standard Operating Conditions: 2.5V to 5.5V (unless otherwise stated) Operating temperature -40°C ≤TA ≤+85°C for Industrial -40°C ≤TA ≤+125°C for Extended				
Param No.	**Symbol**	**Characteristic(1)**	**Min**	**Typ(2)**	**Max**	**Units**	**Conditions**
SP70	TscL	SCKx Input Low Time	30	—	—	ns	
SP71	TscH	SCKx Input High Time	30	—	—	ns	
SP72	TscF	SCKx Input Fall Time(3)	—	10	25	ns	
SP73	TscR	SCKx Input Rise Time(3)	—	10	25	ns	
SP30	TdoF	SDOx Data Output Fall Time(3)	—	—	—	ns	See parameter DO32
SP31	TdoR	SDOx Data Output Rise Time(3)	—	—	—	ns	See parameter DO31
SP35	TscH2doV, TscL2doV	SDOx Data Output Valid after SCKx Edge	—	—	30	ns	
SP40	TdiV2scH, TdiV2scL	Setup Time of SDIx Data Input to SCKx Edge	20	—	—	ns	
SP41	TscH2diL, TscL2diL	Hold Time of SDIx Data Input to SCKx Edge	20	—	—	ns	
SP50	TssL2scH, TssL2scL	$\overline{SS}$x↓to SCKx↑ or SCKx↓Input	120	—	—	ns	
SP51	TssH2doZ	$\overline{SS}$x↑ to SDOx Output High-impedance(3)	10	—	50	ns	
SP52	TscH2ssH TscL2ssH	$\overline{SS}$x after SCK Edge	1.5 TCY + 40	—	—	ns	

Note 1: These parameters are characterized but not tested in manufacturing.
2: Data in "Typ" column is at 5V, 25°C unless otherwise stated. Parameters are for design guidance only and are not tested.
3: Assumes 50 pF load on all SPI pins.

© 2011 Microchip Technology Inc.

Downloaded from Arrow.com.

FIGURE 23-17: SPI MODULE SLAVE MODE (CKE = 1) TIMING CHARACTERISTICS

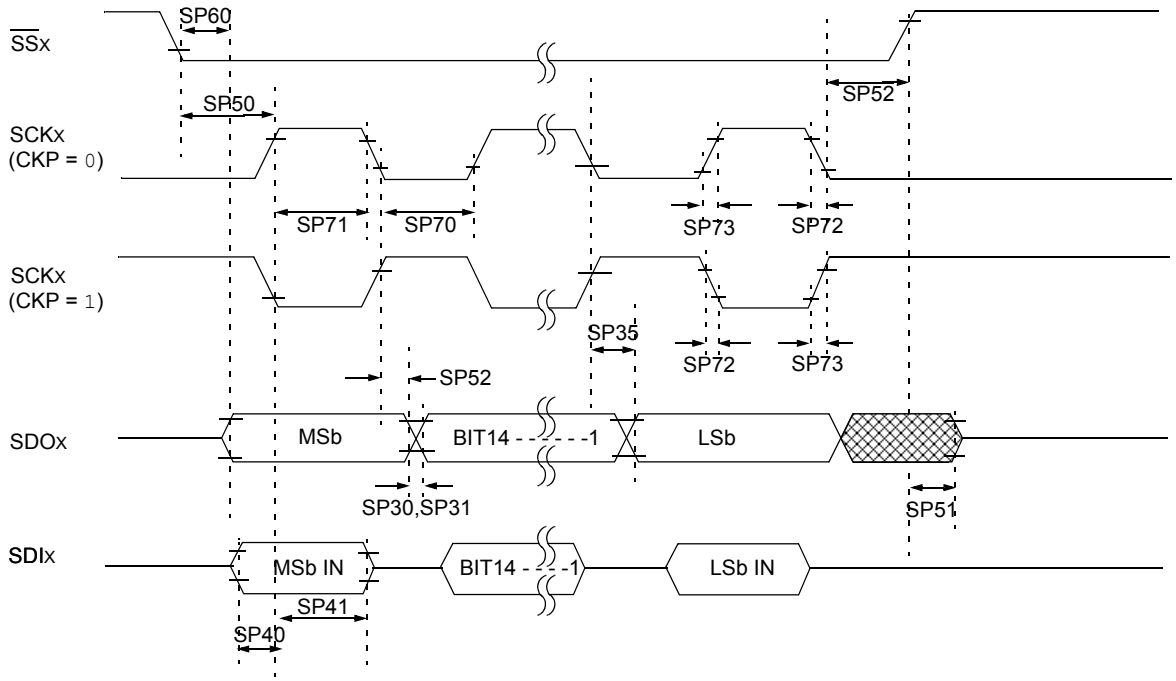

Note: Refer to Figure 23-3 for load conditions.

Downloaded from Arrow.com.

TABLE 23-34: SPI MODULE SLAVE MODE (CKE = 1) TIMING REQUIREMENTS

AC CHARACTERISTICS			Standard Operating Conditions: 2.5V to 5.5V (unless otherwise stated) Operating temperature -40°C ≤TA ≤+85°C for Industrial -40°C ≤TA ≤+125°C for Extended				
Param No.	**Symbol**	**Characteristic(1)**	**Min**	**Typ(2)**	**Max**	**Units**	**Conditions**
SP70	TscL	SCKx Input Low Time	30	—	—	ns	
SP71	TscH	SCKx Input High Time	30	—	—	ns	
SP72	TscF	SCKx Input Fall Time(3)	—	10	25	ns	
SP73	TscR	SCKx Input Rise Time(3)	—	10	25	ns	
SP30	TdoF	SDOx Data Output Fall Time(3)	—	—	—	ns	See parameter DO32
SP31	TdoR	SDOx Data Output Rise Time(3)	—	—	—	ns	See parameter DO31
SP35	TscH2doV, TscL2doV	SDOx Data Output Valid after SCKx Edge	—	—	30	ns	
SP40	TdiV2scH, TdiV2scL	Setup Time of SDIx Data Input to SCKx Edge	20	—	—	ns	
SP41	TscH2diL, TscL2diL	Hold Time of SDIx Data Input to SCKx Edge	20	—	—	ns	
SP50	TssL2scH, TssL2scL	$\overline{SS}$x↓to SCKx↓or SCKx↑ input	120	—	—	ns	
SP51	TssH2doZ	$\overline{SS}$↑ to SDOx Output High-impedance(4)	10	—	50	ns	
SP52	TscH2ssH TscL2ssH	$\overline{SS}$x↑ after SCKx Edge	1.5 TCY + 40	—	—	ns	
SP60	TssL2doV	SDOx Data Output Valid after $\overline{SS}$x Edge	—	—	50	ns	

Note 1: These parameters are characterized but not tested in manufacturing.
2: Data in "Typ" column is at 5V, 25°C unless otherwise stated. Parameters are for design guidance only and are not tested.
3: The minimum clock period for SCK is 100 ns. Therefore, the clock generated in Master mode must not violate this specification.
4: Assumes 50 pF load on all SPI pins.

© 2011 Microchip Technology Inc.

Downloaded from Arrow.com.

FIGURE 23-18: I²C™ BUS START/STOP BITS TIMING CHARACTERISTICS (MASTER MODE)

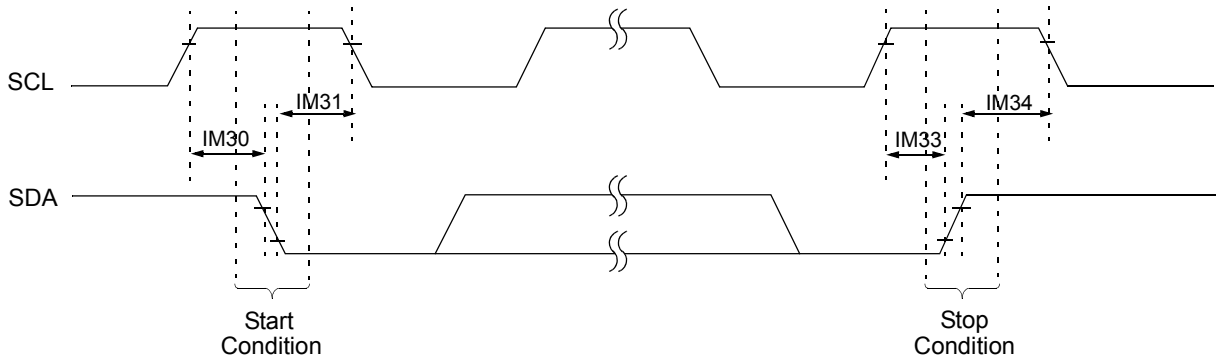

Note: Refer to Figure 23-3 for load conditions.

FIGURE 23-19: I²C™ BUS DATA TIMING CHARACTERISTICS (MASTER MODE)

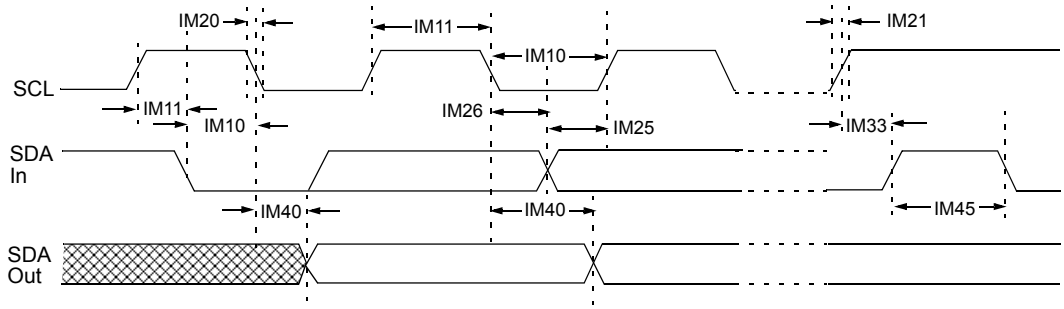

Note: Refer to Figure 23-3 for load conditions.

Downloaded from Arrow.com.

TABLE 23-35: I²C™ BUS DATA TIMING REQUIREMENTS (MASTER MODE)

AC CHARACTERISTICS				Standard Operating Conditions: 2.5V to 5.5V (unless otherwise stated) Operating temperature -40°C ≤TA ≤+85°C for Industrial -40°C ≤TA ≤+125°C for Extended			
Param No.	**Symbol**	**Characteristic**		**Min(1)**	**Max**	**Units**	**Conditions**
IM10	TLO:SCL	Clock Low Time	100 kHz mode	TCY / 2 (BRG + 1)	—	μs	
			400 kHz mode	TCY / 2 (BRG + 1)	—	μs	
			1 MHz mode(2)	TCY / 2 (BRG + 1)	—	μs	
IM11	THI:SCL	Clock High Time	100 kHz mode	TCY / 2 (BRG + 1)	—	μs	
			400 kHz mode	TCY / 2 (BRG + 1)	—	μs	
			1 MHz mode(2)	TCY / 2 (BRG + 1)	—	μs	
IM20	TF:SCL	SDA and SCL Fall Time	100 kHz mode	—	300	ns	CB is specified to be from 10 to 400 pF
			400 kHz mode	20 + 0.1 CB	300	ns	
			1 MHz mode(2)	—	100	ns	
IM21	TR:SCL	SDA and SCL Rise Time	100 kHz mode	—	1000	ns	CB is specified to be from 10 to 400 pF
			400 kHz mode	20 + 0.1 CB	300	ns	
			1 MHz mode(2)	—	300	ns	
IM25	TSU:DAT	Data Input Setup Time	100 kHz mode	250	—	ns	
			400 kHz mode	100	—	ns	
			1 MHz mode(2)	—	—	ns	
IM26	THD:DAT	Data Input Hold Time	100 kHz mode	0	—	ns	
			400 kHz mode	0	0.9	μs	
			1 MHz mode(2)	—	—	ns	
IM30	TSU:STA	Start Condition Setup Time	100 kHz mode	TCY / 2 (BRG + 1)	—	μs	Only relevant for repeated Start condition
			400 kHz mode	TCY / 2 (BRG + 1)	—	μs	
			1 MHz mode(2)	TCY / 2 (BRG + 1)	—	μs	
IM31	THD:STA	Start Condition Hold Time	100 kHz mode	TCY / 2 (BRG + 1)	—	μs	After this period the first clock pulse is generated
			400 kHz mode	TCY / 2 (BRG + 1)	—	μs	
			1 MHz mode(2)	TCY / 2 (BRG + 1)	—	μs	
IM33	TSU:STO	Stop Condition Setup Time	100 kHz mode	TCY / 2 (BRG + 1)	—	μs	
			400 kHz mode	TCY / 2 (BRG + 1)	—	μs	
			1 MHz mode(2)	TCY / 2 (BRG + 1)	—	μs	
IM34	THD:STO	Stop Condition Hold Time	100 kHz mode	TCY / 2 (BRG + 1)	—	ns	
			400 kHz mode	TCY / 2 (BRG + 1)	—	ns	
			1 MHz mode(2)	TCY / 2 (BRG + 1)	—	ns	
IM40	TAA:SCL	Output Valid From Clock	100 kHz mode	—	3500	ns	
			400 kHz mode	—	1000	ns	
			1 MHz mode(2)	—	—	ns	
IM45	TBF:SDA	Bus Free Time	100 kHz mode	4.7	—	μs	Time the bus must be free before a new transmission can start
			400 kHz mode	1.3	—	μs	
			1 MHz mode(2)	—	—	μs	
IM50	CB	Bus Capacitive Loading		—	400	pF	

Note 1: BRG is the value of the I²C™ Baud Rate Generator. Refer to **Section 21. "Inter-Integrated Circuit™ (I²C)"** (DS70046) in the "*dsPIC30F Family Reference Manual*".

2: Maximum pin capacitance = 10 pF for all I²C pins (for 1 MHz mode only).

© 2011 Microchip Technology Inc.

Downloaded from Arrow.com.

FIGURE 23-20: I²C™ BUS START/STOP BITS TIMING CHARACTERISTICS (SLAVE MODE)

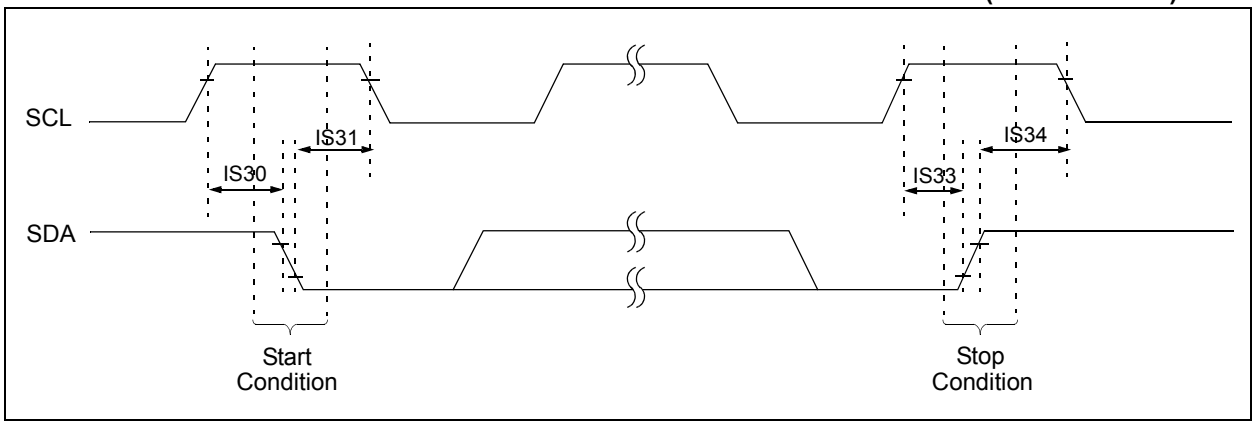

FIGURE 23-21: I²C™ BUS DATA TIMING CHARACTERISTICS (SLAVE MODE)

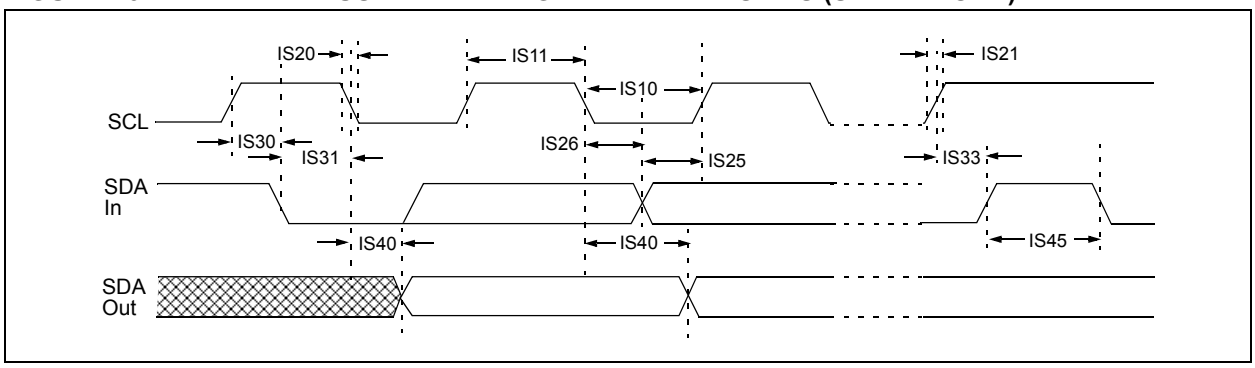

Downloaded from Arrow.com.

TABLE 23-36: I²C™ BUS DATA TIMING REQUIREMENTS (SLAVE MODE)

AC CHARACTERISTICS			Standard Operating Conditions: 2.5V to 5.5V (unless otherwise stated) Operating temperature -40°C ≤TA ≤+85°C for Industrial -40°C ≤TA ≤+125°C for Extended				
Param No.	**Symbol**	**Characteristic**		**Min**	**Max**	**Units**	**Conditions**
IS10	TLO:SCL	Clock Low Time	100 kHz mode	4.7	—	µs	Device must operate at a minimum of 1.5 MHz
			400 kHz mode	1.3	—	µs	Device must operate at a minimum of 10 MHz.
			1 MHz mode(1)	0.5	—	µs	
IS11	THI:SCL	Clock High Time	100 kHz mode	4.0	—	µs	Device must operate at a minimum of 1.5 MHz
			400 kHz mode	0.6	—	µs	Device must operate at a minimum of 10 MHz
			1 MHz mode(1)	0.5	—	µs	
IS20	TF:SCL	SDA and SCL Fall Time	100 kHz mode	—	300	ns	CB is specified to be from 10 to 400 pF
			400 kHz mode	20 + 0.1 CB	300	ns	
			1 MHz mode(1)	—	100	ns	
IS21	TR:SCL	SDA and SCL Rise Time	100 kHz mode	—	1000	ns	CB is specified to be from 10 to 400 pF
			400 kHz mode	20 + 0.1 CB	300	ns	
			1 MHz mode(1)	—	300	ns	
IS25	TSU:DAT	Data Input Setup Time	100 kHz mode	250	—	ns	
			400 kHz mode	100	—	ns	
			1 MHz mode(1)	100	—	ns	
IS26	THD:DAT	Data Input Hold Time	100 kHz mode	0	—	ns	
			400 kHz mode	0	0.9	µs	
			1 MHz mode(1)	0	0.3	µs	
IS30	TSU:STA	Start Condition Setup Time	100 kHz mode	4.7	—	µs	Only relevant for repeated Start condition
			400 kHz mode	0.6	—	µs	
			1 MHz mode(1)	0.25	—	µs	
IS31	THD:STA	Start Condition Hold Time	100 kHz mode	4.0	—	µs	After this period the first clock pulse is generated
			400 kHz mode	0.6	—	µs	
			1 MHz mode(1)	0.25	—	µs	
IS33	TSU:STO	Stop Condition Setup Time	100 kHz mode	4.7	—	µs	
			400 kHz mode	0.6	—	µs	
			1 MHz mode(1)	0.6	—	µs	
IS34	THD:STO	Stop Condition Hold Time	100 kHz mode	4000	—	ns	
			400 kHz mode	600	—	ns	
			1 MHz mode(1)	250		ns	
IS40	TAA:SCL	Output Valid From Clock	100 kHz mode	0	3500	ns	
			400 kHz mode	0	1000	ns	
			1 MHz mode(1)	0	350	ns	
IS45	TBF:SDA	Bus Free Time	100 kHz mode	4.7	—	µs	Time the bus must be free before a new transmission can start
			400 kHz mode	1.3	—	µs	
			1 MHz mode(1)	0.5	—	µs	
IS50	CB	Bus Capacitive Loading		—	400	pF	

Note 1: Maximum pin capacitance = 10 pF for all I²C™ pins (for 1 MHz mode only).

© 2011 Microchip Technology Inc.

Downloaded from Arrow.com.

FIGURE 23-22: CAN MODULE I/O TIMING CHARACTERISTICS

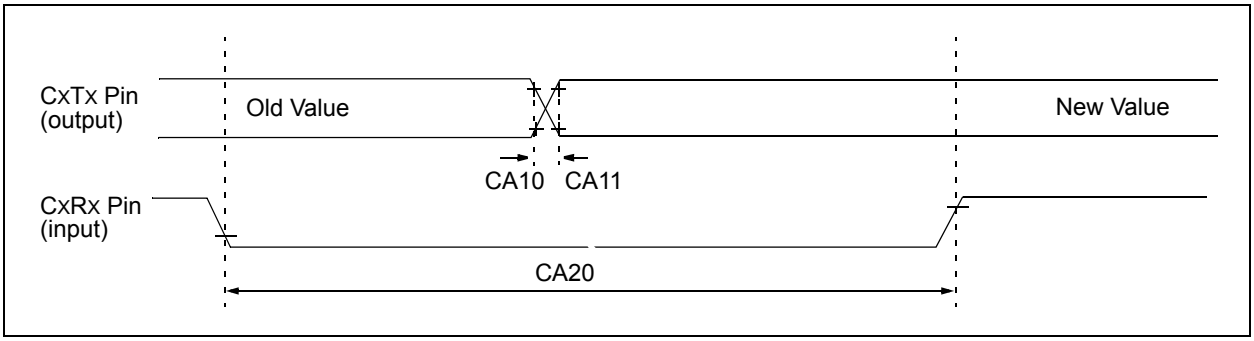

TABLE 23-37: CAN MODULE I/O TIMING REQUIREMENTS

AC CHARACTERISTICS			Standard Operating Conditions: 2.5V to 5.5V (unless otherwise stated) Operating temperature -40°C ≤TA ≤+85°C for Industrial -40°C ≤TA ≤+125°C for Extended				
Param No.	**Symbol**	**Characteristic(1)**	**Min**	**Typ(2)**	**Max**	**Units**	**Conditions**
CA10	TioF	Port Output Fall Time	—	—	—	ns	See parameter DO32
CA11	TioR	Port Output Rise Time	—	—	—	ns	See parameter DO31
CA20	Tcwf	Pulse Width to Trigger CAN Wake-up Filter	500	—	—	ns	

Note 1: These parameters are characterized but not tested in manufacturing.

2: Data in “Typ” column is at 5V, 25°C unless otherwise stated. Parameters are for design guidance only and are not tested.

Downloaded from Arrow.com.

TABLE 23-38: 12-BIT ADC MODULE SPECIFICATIONS

AC CHARACTERISTICS			Standard Operating Conditions: 2.7V to 5.5V (unless otherwise stated) Operating temperature -40°C ≤TA ≤+85°C for Industrial -40°C ≤TA ≤+125°C for Extended				
Param No.	**Symbol**	**Characteristic**	**Min.**	**Typ**	**Max.**	**Units**	**Conditions**
Device Supply							
AD01	AVDD	Module VDD Supply	Greater of VDD - 0.3 or 2.7	—	Lesser of VDD + 0.3 or 5.5	V	
AD02	AVSS	Module VSS Supply	VSS - 0.3	—	VSS + 0.3	V	
Reference Inputs							
AD05	VREFH	Reference Voltage High	AVSS + 2.7	—	AVDD	V	
AD06	VREFL	Reference Voltage Low	AVSS	—	AVDD - 2.7	V	
AD07	VREF	Absolute Reference Voltage	AVSS - 0.3	—	AVDD + 0.3	V	
AD08	IREF	Current Drain	—	150 .001	200 1	µA µA	operating off
Analog Input							
AD10	VINH-VINL	Full-Scale Input Span	VREFL	—	VREFH	V	See Note
AD11	VIN	Absolute Input Voltage	AVSS - 0.3	—	AVDD + 0.3	V	
AD12	—	Leakage Current	—	±0.001	±0.610	µA	VINL = AVSS = VREFL = 0V, AVDD = VREFH = 5V Source Impedance = 2.5 KΩ
AD13	—	Leakage Current	—	±0.001	±0.610	µA	VINL = AVSS = VREFL = 0V, AVDD = VREFH = 3V Source Impedance = 2.5 KΩ
AD15	RSS	Switch Resistance	—	3.2K	—	Ω	
AD16	CSAMPLE	Sample Capacitor	—	18		pF	
AD17	RIN	Recommended Impedance of Analog Voltage Source	—	—	2.5K	Ω	
DC Accuracy							
AD20	Nr	Resolution	12 data bits			bits	
AD21	INL	Integral Nonlinearity(3)	—	—	<±1	LSb	VINL = AVSS = VREFL = 0V, AVDD = VREFH = 5V
AD21A	INL	Integral Nonlinearity(3)	—	—	<±1	LSb	VINL = AVSS = VREFL = 0V, AVDD = VREFH = 3V
AD22	DNL	Differential Nonlinearity(3)	—	—	<±1	LSb	VINL = AVSS = VREFL = 0V, AVDD = VREFH = 5V
AD22A	DNL	Differential Nonlinearity(3)	—	—	<±1	LSb	VINL = AVSS = VREFL = 0V, AVDD = VREFH = 3V
AD23	GERR	Gain Error(3)	+1.25	+1.5	+3	LSb	VINL = AVSS = VREFL = 0V, AVDD = VREFH = 5V

Note 1: The ADC conversion result never decreases with an increase in the input voltage, and has no missing codes.

2: Parameters are characterized but not tested. Use as design guidance only.

3: Measurements taken with external VREF+ and VREF- used as the ADC voltage references.

© 2011 Microchip Technology Inc.

Downloaded from Arrow.com.

TABLE 23-38: 12-BIT ADC MODULE SPECIFICATIONS (CONTINUED)

AC CHARACTERISTICS			Standard Operating Conditions: 2.7V to 5.5V (unless otherwise stated) Operating temperature -40°C ≤TA ≤+85°C for Industrial -40°C ≤TA ≤+125°C for Extended				
Param No.	**Symbol**	**Characteristic**	**Min.**	**Typ**	**Max.**	**Units**	**Conditions**
AD23A	GERR	Gain Error(3)	+1.25	+1.5	+3	LSb	VINL = AVSS = VREFL = 0V, AVDD = VREFH = 3V
AD24	EOFF	Offset Error	-2	-1.5	-1.25	LSb	VINL = AVSS = VREFL = 0V, AVDD = VREFH = 5V
AD24A	EOFF	Offset Error	-2	-1.5	-1.25	LSb	VINL = AVSS = VREFL = 0V, AVDD = VREFH = 3V
AD25	—	Monotonicity(1)	—	—	—	—	Guaranteed
Dynamic Performance							
AD30	THD	Total Harmonic Distortion	—	-71	—	dB	See **Note 2**
AD31	SINAD	Signal to Noise and Distortion	—	68	—	dB	See **Note 2**
AD32	SFDR	Spurious Free Dynamic Range	—	83	—	dB	See **Note 2**
AD33	FNYQ	Input Signal Bandwidth	—	—	100	kHz	
AD34	ENOB	Effective Number of Bits	10.95	11.1	—	bits	

Note 1: The ADC conversion result never decreases with an increase in the input voltage, and has no missing codes.

2: Parameters are characterized but not tested. Use as design guidance only.

3: Measurements taken with external VREF+ and VREF- used as the ADC voltage references.

Downloaded from Arrow.com.

FIGURE 23-23: 12-BIT ADC TIMING CHARACTERISTICS (ASAM = 0, SSRC = 000)

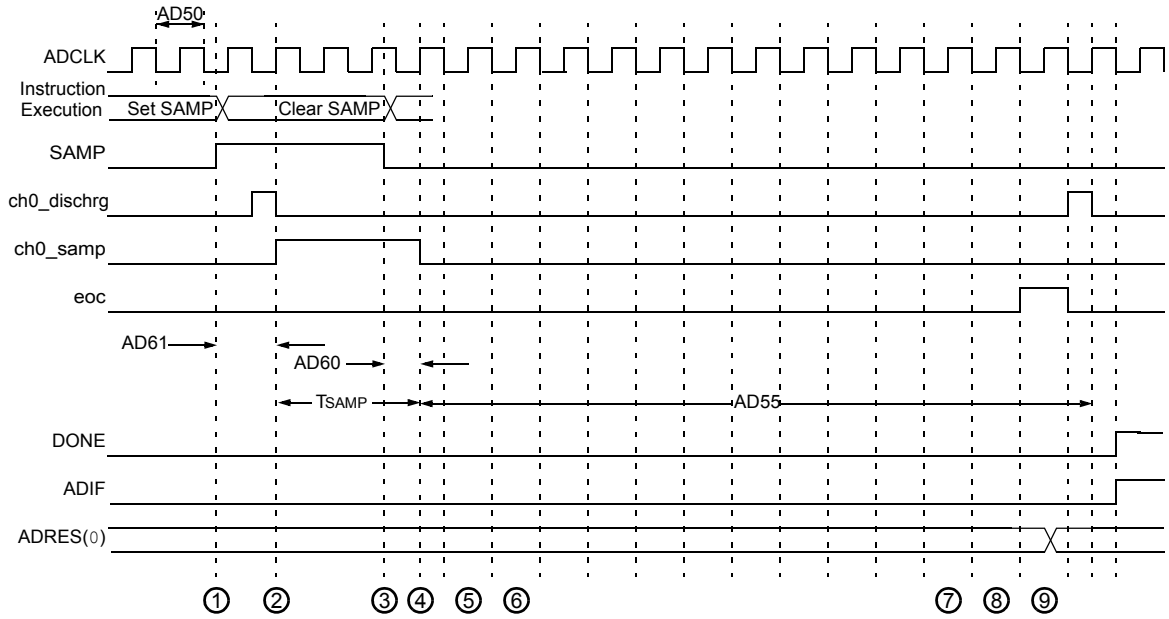

1 – Software sets ADCON. SAMP to start sampling.
2 – Sampling starts after discharge period.
TSAMP is described in **Section 18. "12-bit A/D Converter"** (DS70046) of the *"dsPIC30F Family Reference Manual"*.
3 – Software clears ADCON. SAMP to start conversion.
4 – Sampling ends, conversion sequence starts.
5 – Convert bit 11.
6 – Convert bit 10.
7 – Convert bit 1.
8 – Convert bit 0.
9 – One TAD for end of conversion.

© 2011 Microchip Technology Inc.

Downloaded from Arrow.com.

TABLE 23-39: 12-BIT ADC TIMING REQUIREMENTS

AC CHARACTERISTICS			Standard Operating Conditions: 2.7V to 5.5V (unless otherwise stated) Operating temperature -40°C ≤TA ≤+85°C for Industrial -40°C ≤TA ≤+125°C for Extended				
Param No.	**Symbol**	**Characteristic**	**Min.**	**Typ**	**Max.**	**Units**	**Conditions**
Clock Parameters							
AD50	TAD	ADC Clock Period	—	334	—	ns	VDD = 3-5.5V **(Note 1)**
AD51	tRC	ADC Internal RC Oscillator Period	1.2	1.5	1.8	µs	
Conversion Rate							
AD55	tCONV	Conversion Time	—	14 TAD		ns	
AD56	FCNV	Throughput Rate	—	200	—	ksps	VDD = VREF = 3-5.5V
AD57	TSAMP	Sample Time	—	1 TAD	—	ns	VDD = 3-5.5V Source resistance Rs = 0-2.5 kΩ
Timing Parameters							
AD60	tPCS	Conversion Start from Sample Trigger	—	1 TAD	—	ns	
AD61	tPSS	Sample Start from Setting Sample (SAMP) Bit	0.5 TAD	—	1.5 TAD	ns	
AD62	tCSS	Conversion Completion to Sample Start (ASAM = 1)	—	0.5 TAD	—	ns	
AD63	tDPU(2)	Time to Stabilize Analog Stage from ADC Off to ADC On	—	—	20	µs	

Note 1: Because the sample caps will eventually lose charge, clock rates below 10 kHz can affect linearity performance, especially at elevated temperatures.

2: tDPU is the time required for the ADC module to stabilize when it is turned on (ADCON1<ADON> = 1). During this time the ADC result is indeterminate.

Downloaded from Arrow.com.

NOTES:

© 2011 Microchip Technology Inc.

Downloaded from Arrow.com.

24.0 PACKAGING INFORMATION

24.1 Package Marking Information

64-Lead TQFP

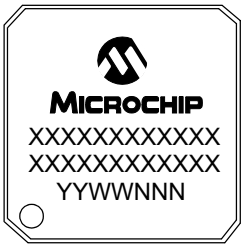

Example

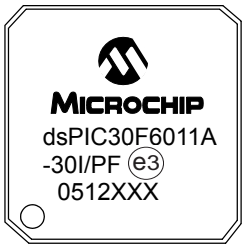

80-Lead TQFP

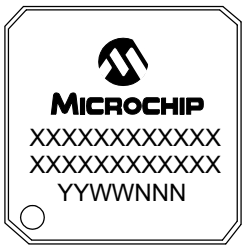

Example

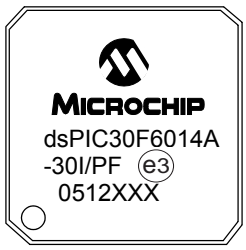

Legend:	XX...X	Customer-specific information
	Y	Year code (last digit of calendar year)
	YY	Year code (last 2 digits of calendar year)
	WW	Week code (week of January 1 is week ‘01’)
	NNN	Alphanumeric traceability code
	e3	Pb-free JEDEC designator for Matte Tin (Sn)
	*	This package is Pb-free. The Pb-free JEDEC designator (e3) can be found on the outer packaging for this package.
Note:	In the event the full Microchip part number cannot be marked on one line, it will be carried over to the next line, thus limiting the number of available characters for customer-specific information.	

Downloaded from Arrow.com.

64-Lead Plastic Thin Quad Flatpack (PF) – 14x14x1 mm Body, 2.00 mm [TQFP]

Note: For the most current package drawings, please see the Microchip Packaging Specification located at http://www.microchip.com/packaging

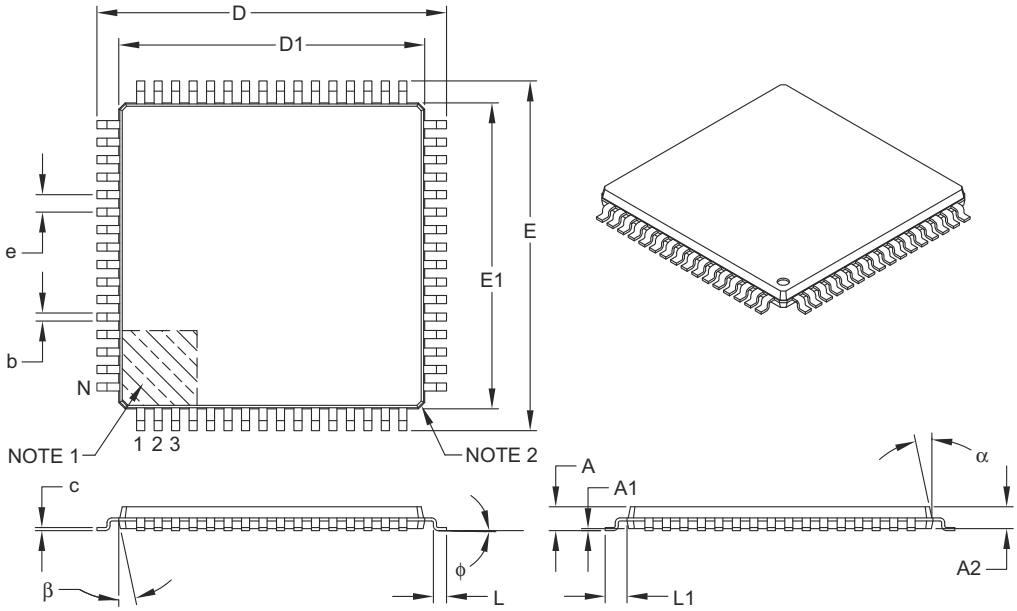

Units		MILLIMETERS		
Dimension Limits		MIN	NOM	MAX
Number of Leads	N	64		
Lead Pitch	e	0.80 BSC		
Overall Height	A	–	–	1.20
Molded Package Thickness	A2	0.95	1.00	1.05
Standoff	A1	0.05	–	0.15
Foot Length	L	0.45	0.60	0.75
Footprint	L1	1.00 REF		
Foot Angle	ϕ	0°	3.5°	7°
Overall Width	E	16.00 BSC		
Overall Length	D	16.00 BSC		
Molded Package Width	E1	14.00 BSC		
Molded Package Length	D1	14.00 BSC		
Lead Thickness	c	0.09	–	0.20
Lead Width	b	0.30	0.37	0.45
Mold Draft Angle Top	α	11°	12°	13°
Mold Draft Angle Bottom	β	11°	12°	13°

Notes:

1. Pin 1 visual index feature may vary, but must be located within the hatched area.
2. Chamfers at corners are optional; size may vary.
3. Dimensions D1 and E1 do not include mold flash or protrusions. Mold flash or protrusions shall not exceed 0.25 mm per side.
4. Dimensioning and tolerancing per ASME Y14.5M.

   BSC: Basic Dimension. Theoretically exact value shown without tolerances.
   REF: Reference Dimension, usually without tolerance, for information purposes only.

Microchip Technology Drawing C04-066B

© 2011 Microchip Technology Inc.

Downloaded from Arrow.com.

64-Lead Plastic Thin Quad Flatpack (PF) – 14x14x1 mm Body, 2.00 mm [TQFP]

Note: For the most current package drawings, please see the Microchip Packaging Specification located at http://www.microchip.com/packaging

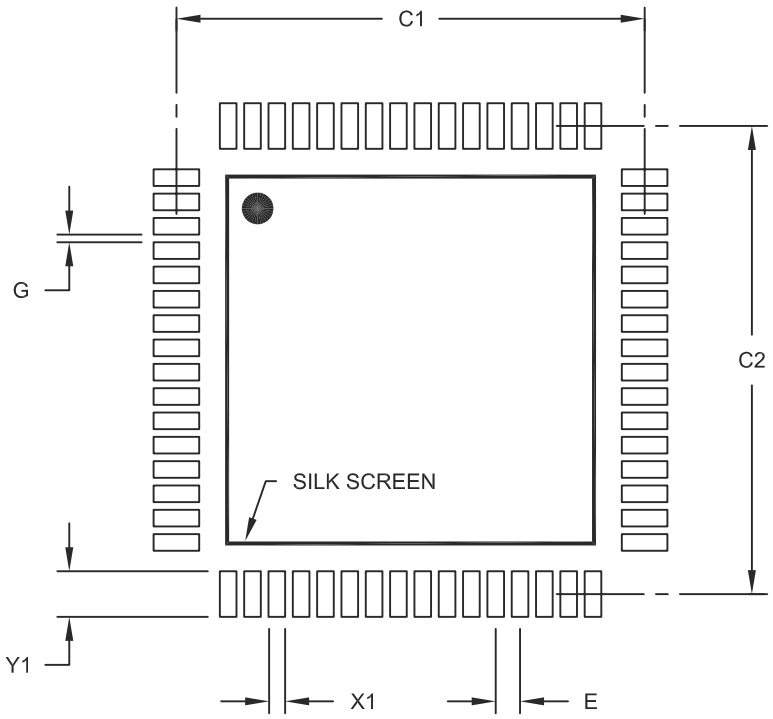

RECOMMENDED LAND PATTERN

Units		MILLIMETERS		
Dimension Limits		MIN	NOM	MAX
Contact Pitch	E		0.80 BSC	
Contact Pad Spacing	C1		15.40	
Contact Pad Spacing	C2		15.40	
Contact Pad Width (X64)	X1			0.55
Contact Pad Length (X64)	Y1			1.50
Distance Between Pads	G	0.25		

Notes:

1. Dimensioning and tolerancing per ASME Y14.5M
   BSC: Basic Dimension. Theoretically exact value shown without tolerances.

Microchip Technology Drawing No. C04-2066A

Downloaded from Arrow.com.

64-Lead Plastic Thin Quad Flatpack (PT) – 10x10x1 mm Body, 2.00 mm [TQFP]

Note: For the most current package drawings, please see the Microchip Packaging Specification located at http://www.microchip.com/packaging

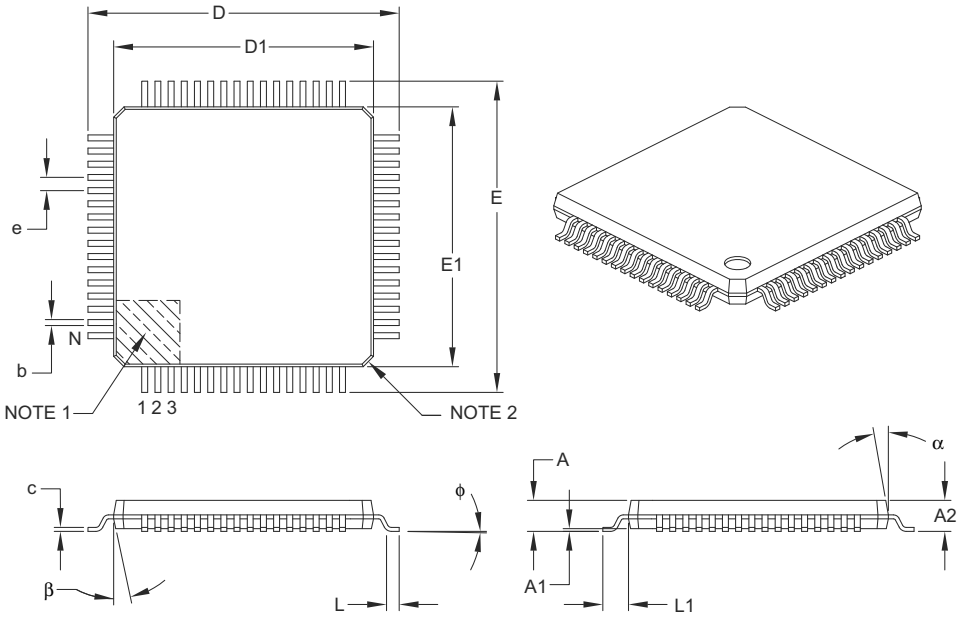

Units		MILLIMETERS		
Dimension Limits		MIN	NOM	MAX
Number of Leads	N	64		
Lead Pitch	e	0.50 BSC		
Overall Height	A	–	–	1.20
Molded Package Thickness	A2	0.95	1.00	1.05
Standoff	A1	0.05	–	0.15
Foot Length	L	0.45	0.60	0.75
Footprint	L1	1.00 REF		
Foot Angle	ϕ	0°	3.5°	7°
Overall Width	E	12.00 BSC		
Overall Length	D	12.00 BSC		
Molded Package Width	E1	10.00 BSC		
Molded Package Length	D1	10.00 BSC		
Lead Thickness	c	0.09	–	0.20
Lead Width	b	0.17	0.22	0.27
Mold Draft Angle Top	α	11°	12°	13°
Mold Draft Angle Bottom	β	11°	12°	13°

Notes:

1. Pin 1 visual index feature may vary, but must be located within the hatched area.
2. Chamfers at corners are optional; size may vary.
3. Dimensions D1 and E1 do not include mold flash or protrusions. Mold flash or protrusions shall not exceed 0.25 mm per side.
4. Dimensioning and tolerancing per ASME Y14.5M.

   BSC: Basic Dimension. Theoretically exact value shown without tolerances.

   REF: Reference Dimension, usually without tolerance, for information purposes only.

Microchip Technology Drawing C04-085B

© 2011 Microchip Technology Inc.

Downloaded from Arrow.com.

64-Lead Plastic Thin Quad Flatpack (PT) – 10x10x1 mm Body, 2.00 mm [TQFP]

Note: For the most current package drawings, please see the Microchip Packaging Specification located at http://www.microchip.com/packaging

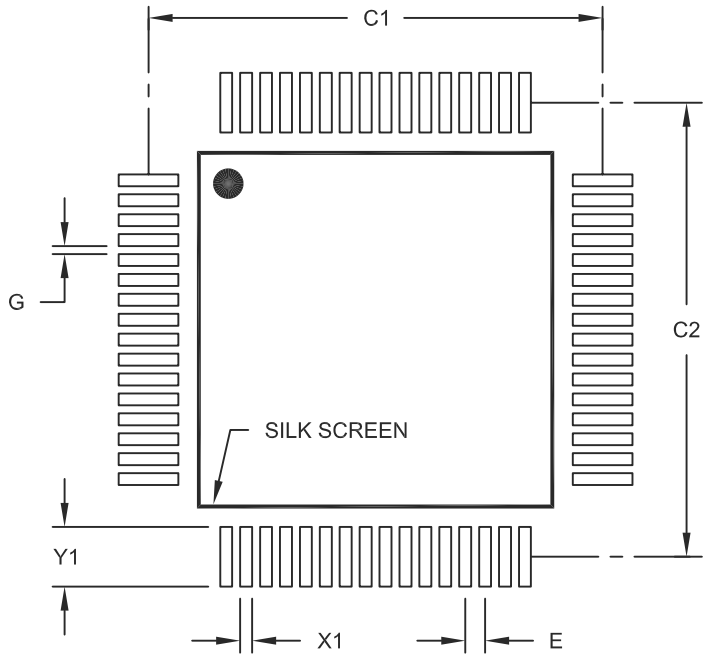

RECOMMENDED LAND PATTERN

Units		MILLIMETERS		
Dimension Limits		MIN	NOM	MAX
Contact Pitch	E		0.50 BSC	
Contact Pad Spacing	C1		11.40	
Contact Pad Spacing	C2		11.40	
Contact Pad Width (X64)	X1			0.30
Contact Pad Length (X64)	Y1			1.50
Distance Between Pads	G	0.20		

Notes:

1. Dimensioning and tolerancing per ASME Y14.5M
   BSC: Basic Dimension. Theoretically exact value shown without tolerances.

Microchip Technology Drawing No. C04-2085A

Downloaded from Arrow.com.

80-Lead Plastic Thin Quad Flatpack (PF) – 14x14x1 mm Body, 2.00 mm [TQFP]

Note: For the most current package drawings, please see the Microchip Packaging Specification located at http://www.microchip.com/packaging

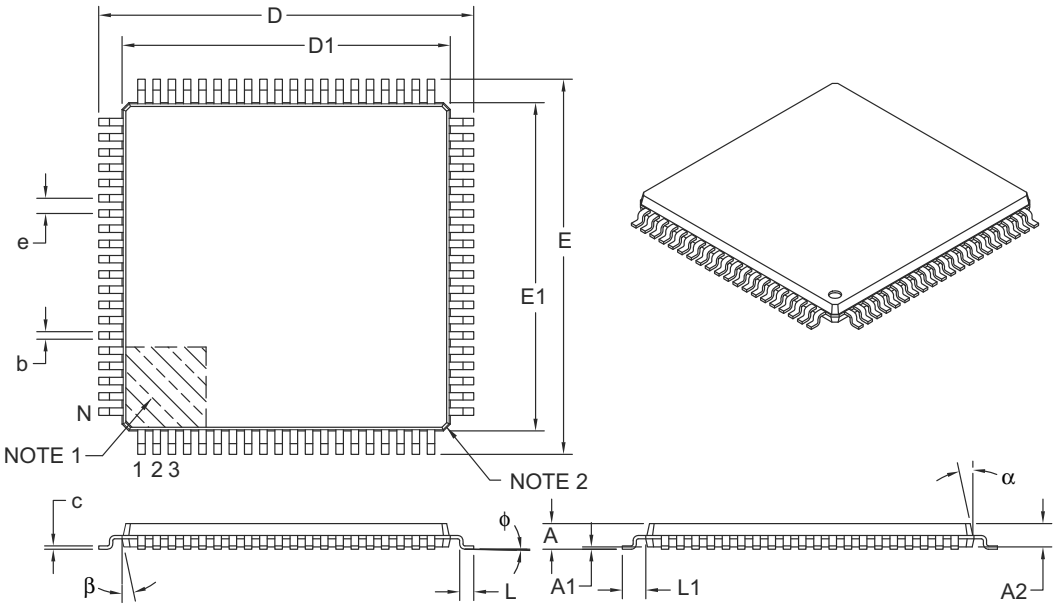

Units		MILLIMETERS		
Dimension Limits		MIN	NOM	MAX
Number of Leads	N	80		
Lead Pitch	e	0.65 BSC		
Overall Height	A	–	–	1.20
Molded Package Thickness	A2	0.95	1.00	1.05
Standoff	A1	0.05	–	0.15
Foot Length	L	0.45	0.60	0.75
Footprint	L1	1.00 REF		
Foot Angle	ϕ	0°	3.5°	7°
Overall Width	E	16.00 BSC		
Overall Length	D	16.00 BSC		
Molded Package Width	E1	14.00 BSC		
Molded Package Length	D1	14.00 BSC		
Lead Thickness	c	0.09	–	0.20
Lead Width	b	0.22	0.32	0.38
Mold Draft Angle Top	α	11°	12°	13°
Mold Draft Angle Bottom	β	11°	12°	13°

Notes:

1. Pin 1 visual index feature may vary, but must be located within the hatched area.
2. Chamfers at corners are optional; size may vary.
3. Dimensions D1 and E1 do not include mold flash or protrusions. Mold flash or protrusions shall not exceed 0.25 mm per side.
4. Dimensioning and tolerancing per ASME Y14.5M.

   BSC: Basic Dimension. Theoretically exact value shown without tolerances.

   REF: Reference Dimension, usually without tolerance, for information purposes only.

Microchip Technology Drawing C04-116B

© 2011 Microchip Technology Inc.

Downloaded from Arrow.com.

80-Lead Plastic Thin Quad Flatpack (PF) – 14x14x1 mm Body, 2.00 mm Footprint [TQFP]

Note: For the most current package drawings, please see the Microchip Packaging Specification located at http://www.microchip.com/packaging

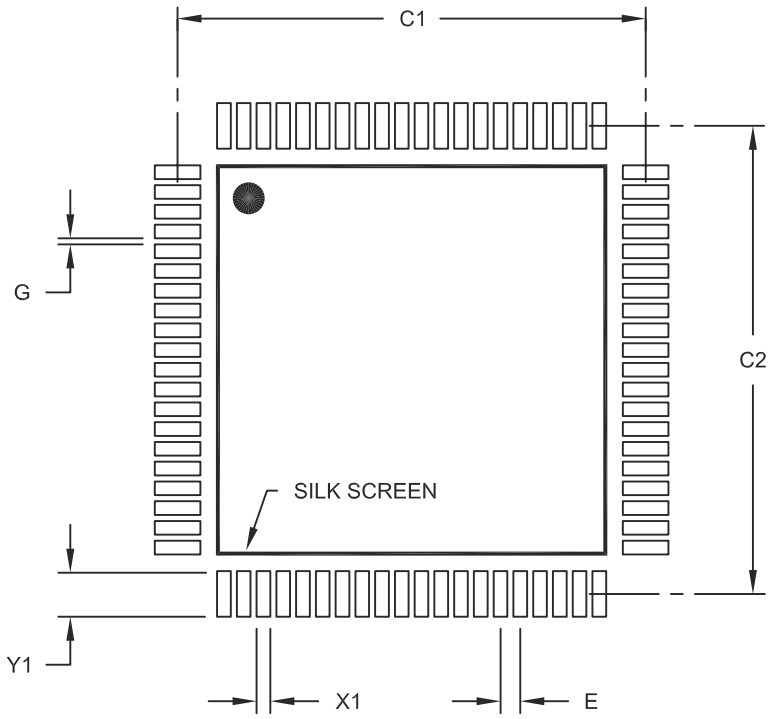

RECOMMENDED LAND PATTERN

Units		MILLIMETERS		
Dimension Limits		MIN	NOM	MAX
Contact Pitch	E		0.65 BSC	
Contact Pad Spacing	C1		15.40	
Contact Pad Spacing	C2		15.40	
Contact Pad Width (X80)	X1			0.45
Contact Pad Length (X80)	Y1			1.50
Distance Between Pads	G	0.20		

Notes:

1. Dimensioning and tolerancing per ASME Y14.5M
   BSC: Basic Dimension. Theoretically exact value shown without tolerances.

Microchip Technology Drawing No. C04-2116B

Downloaded from Arrow.com.

80-Lead Plastic Thin Quad Flatpack (PT) – 12x12x1 mm Body, 2.00 mm [TQFP]

Note: For the most current package drawings, please see the Microchip Packaging Specification located at http://www.microchip.com/packaging

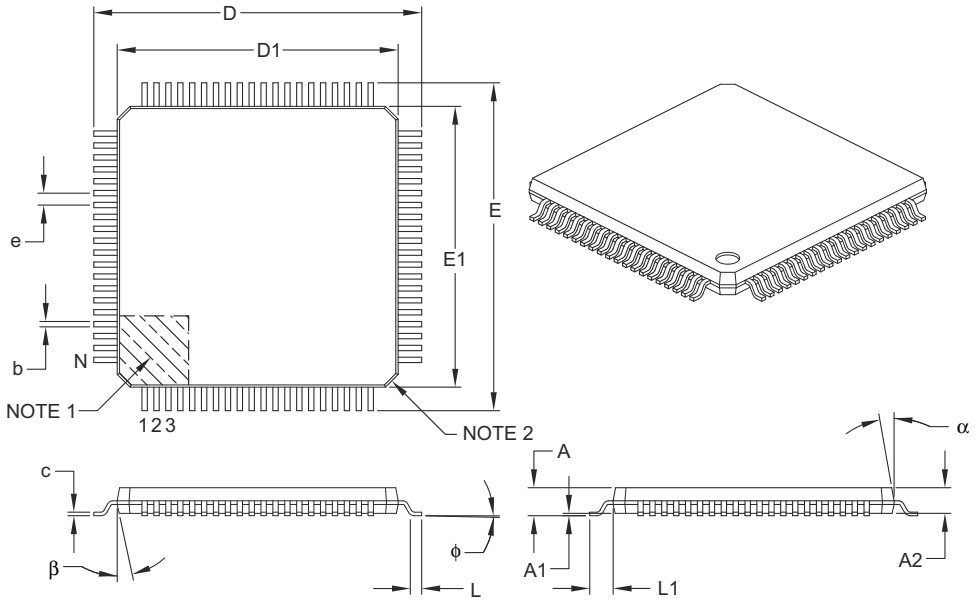

Units		MILLIMETERS		
Dimension Limits		MIN	NOM	MAX
Number of Leads	N	80		
Lead Pitch	e	0.50 BSC		
Overall Height	A	–	–	1.20
Molded Package Thickness	A2	0.95	1.00	1.05
Standoff	A1	0.05	–	0.15
Foot Length	L	0.45	0.60	0.75
Footprint	L1	1.00 REF		
Foot Angle	ϕ	0°	3.5°	7°
Overall Width	E	14.00 BSC		
Overall Length	D	14.00 BSC		
Molded Package Width	E1	12.00 BSC		
Molded Package Length	D1	12.00 BSC		
Lead Thickness	c	0.09	–	0.20
Lead Width	b	0.17	0.22	0.27
Mold Draft Angle Top	α	11°	12°	13°
Mold Draft Angle Bottom	β	11°	12°	13°

Notes:

1. Pin 1 visual index feature may vary, but must be located within the hatched area.
2. Chamfers at corners are optional; size may vary.
3. Dimensions D1 and E1 do not include mold flash or protrusions. Mold flash or protrusions shall not exceed 0.25 mm per side.
4. Dimensioning and tolerancing per ASME Y14.5M.

   BSC: Basic Dimension. Theoretically exact value shown without tolerances.
   REF: Reference Dimension, usually without tolerance, for information purposes only.

Microchip Technology Drawing C04-092B

© 2011 Microchip Technology Inc.

Downloaded from Arrow.com.

80-Lead Plastic Thin Quad Flatpack (PT) – 12x12x1 mm Body, 2.00 mm [TQFP]

Note: For the most current package drawings, please see the Microchip Packaging Specification located at http://www.microchip.com/packaging

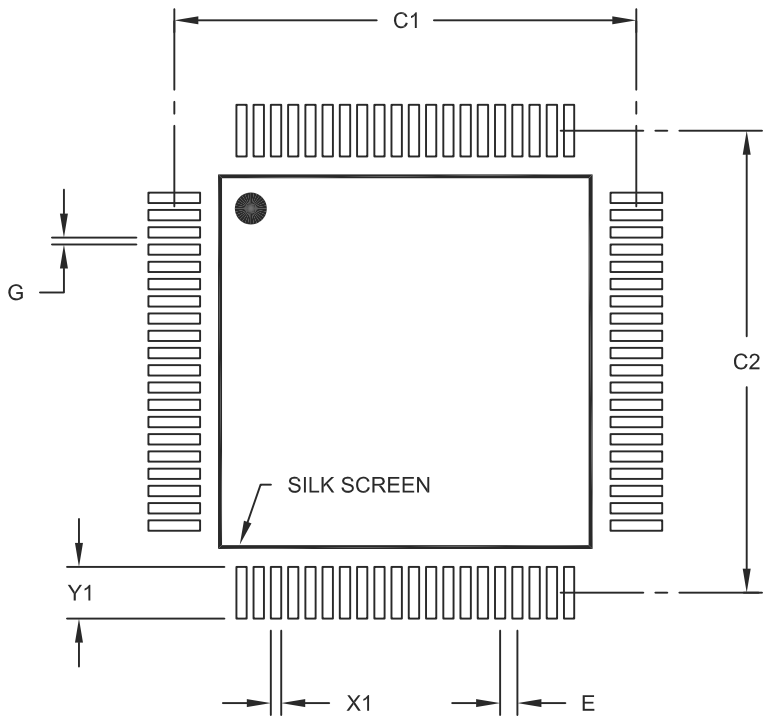

RECOMMENDED LAND PATTERN

Units		MILLIMETERS		
Dimension Limits		MIN	NOM	MAX
Contact Pitch	E		0.50 BSC	
Contact Pad Spacing	C1		13.40	
Contact Pad Spacing	C2		13.40	
Contact Pad Width (X80)	X1			0.30
Contact Pad Length (X80)	Y1			1.50
Distance Between Pads	G	0.20		

Notes:

1. Dimensioning and tolerancing per ASME Y14.5M
   BSC: Basic Dimension. Theoretically exact value shown without tolerances.

Microchip Technology Drawing No. C04-2092A

Downloaded from Arrow.com.

NOTES:

© 2011 Microchip Technology Inc.

Downloaded from Arrow.com.

APPENDIX A: REVISION HISTORY

Revision A (January 2005)

Original data sheet for dsPIC30F6011A, 6012A, 6013A and 6014A devices.

Revision B (September 2005)

Revision B of this data sheet reflects these changes:

- 12-Bit ADC allows up to 200 ksps sampling rate (see **Section 19.6 "Selecting the ADC Conversion Clock"** and **Section 19.7 "ADC Speeds"**),
- FRC Oscillator revised to allow tuning in ±0.75% increments (see **Section 20.2.5 "Fast RC Oscillator (FRC)"** and Table 20-4).
- Revised electrical characteristics:
  - Operating Current (IDD) (see Table 23-5)
  - Idle Current (IIDLE) (see Table 23-6)
  - Power-Down Current (IPD) (seeTable 23-7)
  - Brown-Out Reset (BOR) (see Table 23-11)
  - External Clock Timing Requirements (see Table 23-14)
  - PLL Clock Timing Specification (VDD = 2.5-5.5 V) (see Table 23-15)
  - PLL Jitter (seeTable 23-16)
  - Internal FRC Jitter Accuracy and Drift (see Table 23-18)
  - 12-Bit ADC Module Specifications (see Table 23-38)
  - 12-Bit ADC Conversion Timing Requirements (see Table 23-39)

Revision C (October 2006)

Revision C of this data sheet reflects these changes:

- BSRAM and SSRAM SFRs added for Data RAM protection (see **Section 3.2.7 "Data Ram Protection Feature"**)
- Added INTTREG register (see **Section 5.0 "Interrupts"**)
- Revised I^2C Slave Addresses (see Table 15-1)
- Base Instruction CP1 removed from instruction set (see Table 21-2)
- Revised electrical characteristics:
  - Operating Current (IDD) (see Table 23-5)
  - Idle Current (IIDLE) (see Table 23-6)
  - Power-Down Current (IPD) (seeTable 23-7)
  - I/O Pin Input Specifications (see Table 23-8)
  - Brown-Out Reset (BOR) (see Table 23-11)
  - Watchdog Timer (see Table 23-21)

Revision D (March 2008)

This revision reflects these updates:

- Added FUSE Configuration Register (FICD) details (see **Section 20.8 "Device Configuration Registers"** and Table 20-8)
- Removed erroneous statement regarding generation of CAN receive errors (see **Section 17.4.5 "Receive Errors"**)
- Electrical Specifications:
  - Resolved TBD values for parameters DO10, DO16, DO20, and DO26 (see Table 23-9)
  - 10-bit High-Speed ADC tPDU timing parameter (time to stabilize) has been updated from 20 µs typical to 20 µs maximum (see Table 23-39)
  - Parameter OS65 (Internal RC Accuracy) has been expanded to reflect multiple Min and Max values for different temperatures (see Table 23-19)
  - Parameter DC12 (RAM Data Retention Voltage) has been updated to include a Min value (see Table 23-4)
  - Parameter D134 (Erase/Write Cycle Time) has been updated to include Min and Max values and the Typ value has been removed (see Table 23-12)
  - Removed parameters OS62 (Internal FRC Jitter) and OS64 (Internal FRC Drift) and Note 2 from AC Characteristics (see Table 23-18)
  - Parameter OS63 (Internal FRC Accuracy) has been expanded to reflect multiple Min and Max values for different temperatures (see Table 23-18)
  - Updated I/O Pin characteristics parameters DI19 and DI29 (see Table 23-8)
  - Removed parameters DC27a, DC27b, DC47a, and DC47b (references to IDD, 20 MIPs @ 3.3V) in Table 23-5 and Table 23-6
  - Removed parameters CS77 and CS78 (references to TFACL and TRACL @ 3.3V) in Table 23-30
  - Updated Min and Max values and Conditions for parameter SY11 and updated Min, Typ, and Max values and Conditions for parameter SY20 (see Table 23-21)
- Preliminary marking removed from document footer
- Additional minor corrections throughout the document

Downloaded from Arrow.com.

Revision E (February 2011)

This revision includes minor typographical and formatting changes throughout the data sheet text.

The major changes are referenced by their respective section in Table A-1.

TABLE A-1: MAJOR SECTION UPDATES

Section Name	Update Description
Section 20.0 "System Integration"	Added a shaded note on OSCTUN functionality in **Section 20.2.5 "Fast RC Oscillator (FRC)"**.
Section 23.0 "Electrical Characteristics"	Updated the maximum MIPS for the Operating MIPS vs. Voltage VDD range of 3.0-3.6V for dsPIC30F601XA-20I and dsPIC30F601XA-30I devices (see Table 23-1). Added Operating Current (IDD) parameters DC27a and DC27b (see Table 23-5). Added Idle Current (IIDLE) parameters DC47a and DC47b (see Table 23-6). Updated the maximum value for parameter DI19 and the minimum value for parameter DI29 in the I/O Pin Input Specifications (see Table 23-8). Removed parameter D136 and updated the minimum, typical, maximum, and conditions for parameters D122 and D134 in the Program and EEPROM specifications (see Table 23-12).

© 2011 Microchip Technology Inc.

Downloaded from Arrow.com.

INDEX

Numerics

12-bit Analog-to-Digital Converter (ADC) Module 133

A

AC Characteristics 183
Internal FRC Jitter, Accuracy and Drift 186
Internal LPRC Accuracy 186
Load Conditions 183
AC Temperature and Voltage Specifications 183
AC-Link Mode Operation 130
16-bit Mode 130
20-bit Mode 130
ADC 133
Aborting a Conversion 135
ADCHS Register 133
ADCON1 Register 133
ADCON2 Register 133
ADCON3 Register 133
ADCSSL Register 133
ADPCFG Register 133
Configuring Analog Port Pins 62, 140
Connection Considerations 140
Conversion Operation 134
Effects of a Reset 139
Operation During CPU Idle Mode 139
Operation During CPU Sleep Mode 139
Output Formats 139
Power-down Modes 139
Programming the Start of Conversion Trigger 135
Register Map 141
Result Buffer 134
Sampling Requirements 138
Selecting the Conversion Clock 135
Selecting the Conversion Sequence 134
ADC Conversion Speeds 136
Address Generator Units 39
Alternate Vector Table 49
Analog-to-Digital Converter. *See* ADC.
Assembler
MPASM Assembler 170
Automatic Clock Stretch 98
During 10-bit Addressing (STREN = 1) 98
During 7-bit Addressing (STREN = 1) 98
Receive Mode 98
Transmit Mode 98

B

Band Gap Start-up Time
Requirements 190
Timing Characteristics 190
Barrel Shifter 24
Bit-Reversed Addressing 42
Example 43
Implementation 42
Modifier Values Table 43
Sequence Table (16-Entry) 43
Block Diagrams
12-bit ADC Functional 133
16-bit Timer1 Module 67
16-bit Timer2 73
16-bit Timer3 73
16-bit Timer4 78
16-bit Timer5 78
32-bit Timer2/3 72
32-bit Timer4/5 77
CAN Buffers and Protocol Engine 112
DCI Module 124
Dedicated Port Structure 61
DSP Engine 21
dsPIC30F6011A/6012A 12
dsPIC30F6013A/6014A 13
External Power-on Reset Circuit 155
I^2C 96
Input Capture Mode 81
Oscillator System 145
Output Compare Mode 85
Reset System 153
Shared Port Structure 62
SPI 92
SPI Master/Slave Connection 92
UART Receiver 104
UART Transmitter 103
BOR. *See* Brown-out Reset.
Brown-out Reset 143
Characteristics 181, 182
Timing Requirements 189

C

C Compilers
MPLAB C18 170
CAN Module 111
Baud Rate Setting 116
CAN1 Register Map 118
CAN2 Register Map 120
Frame Types 111
I/O Timing Characteristics 207
I/O Timing Requirements 207
Message Reception 114
Message Transmission 115
Modes of Operation 113
Overview 111
CLKOUT and I/O Timing
Characteristics 187
Requirements 187
Code Examples
Data EEPROM Block Erase 58
Data EEPROM Block Write 60
Data EEPROM Read 57
Data EEPROM Word Erase 58
Data EEPROM Word Write 59
Erasing a Row of Program Memory 53
Initiating a Programming Sequence 54
Loading Write Latches 54
Code Protection 143
Core Architecture
Overview 17
CPU Architecture Overview 17
Customer Change Notification Service 227
Customer Notification Service 227
Customer Support 227

D

Data Accumulators and Adder/Subtractor 22
Data Space Write Saturation 24
Overflow and Saturation 22
Round Logic 23
Write Back 23
Data Address Space 31
Alignment 34

Downloaded from Arrow.com.

Alignment (Figure) 35
Effect of Invalid Memory Accesses (Table) 34
MCU and DSP (MAC Class) Instructions Example 34
Memory Map 31
Memory Map for dsPIC30F6011A/6013A 32
Memory Map for dsPIC30F6012A/6014A 33
Near Data Space 35
Software Stack 35
Spaces 31
Width 34
Data Converter Interface (DCI) Module 123
Data EEPROM Memory 57
Erasing 58
Erasing, Block 58
Erasing, Word 58
Protection Against Spurious Write 60
Reading 57
Write Verify 60
Writing 59
Writing, Block 60
Writing, Word 59
DC Characteristics 174
Brown-out Reset 181, 182
I/O Pin Input Specifications 180
I/O Pin Output Specifications 180
Idle Current (IIDLE) 177
Low-Voltage Detect 180
LVDL 181
Operating Current (IDD) 176
Power-Down Current (IPD) 178
Program and EEPROM 182
DCI Module
Bit Clock Generator 127
Buffer Alignment with Data Frames 129
Buffer Control 123
Buffer Data Alignment 123
Buffer Length Control 129
COFS Pin 123
CSCK Pin 123
CSDI Pin 123
CSDO Mode Bit 130
CSDO Pin 123
Data Justification Control Bit 128
Device Frequencies for Common Codec CSCK Frequencies (Table) 127
Digital Loopback Mode 130
Enable 125
Frame Sync Generator 125
Frame Sync Mode Control Bits 125
I/O Pins 123
Interrupts 130
Introduction 123
Master Frame Sync Operation 125
Operation 125
Operation During CPU Idle Mode 130
Operation During CPU Sleep Mode 130
Receive Slot Enable Bits 128
Receive Status Bits 129
Register Map 132
Sample Clock Edge Control Bit 128
Slave Frame Sync Operation 126
Slot Enable Bits Operation with Frame Sync 128
Slot Status Bits 130
Synchronous Data Transfers 128
Timing Characteristics
AC-Link Mode 197
Multichannel, I^{2}S Modes 195
Timing Requirements
AC-Link Mode 197
Multichannel, I^{2}S Modes 196
Transmit Slot Enable Bits 128
Transmit Status Bits 129
Transmit/Receive Shift Register 123
Underflow Mode Control Bit 130
Word Size Selection Bits 125
Development Support 169
Device Configuration
Register Map 160
Device Configuration Registers 158
FBORPOR 158
FBS 158
FGS 158
FOSC 158
FSS 158
FWDT 158
Device Overview 91
Disabling the UART 105
Divide Support 20
Instructions (Table) 20
DSP Engine 20
Multiplier 22
Dual Output Compare Match Mode 86
Continuous Pulse Mode 86
Single Pulse Mode 86

E

Electrical Characteristics 173
AC 183
DC 174
Enabling and Setting Up UART
Setting Up Data, Parity and Stop Bit Selections 105
Enabling the UART 105
Equations
ADC Conversion Clock 135
Baud Rate 107
Bit Clock Frequency 127
COFSG Period 125
Serial Clock Rate 100
Time Quantum for Clock Generation 117
Errata 9
External Clock Timing Characteristics
Type A, B and C Timer 191
External Clock Timing Requirements 184
Type A Timer 191
Type B Timer 192
Type C Timer 192
External Interrupt Requests 49

F

Fast Context Saving 49
Flash Program Memory 51
Control Registers 52
NVMADR 52
NVMADRU 52
NVMCON 52
NVMKEY 52

I

I/O Pin Specifications
Input 180
Output 180

© 2011 Microchip Technology Inc.

Downloaded from Arrow.com.

I/O Ports ... 61
Parallel (PIO) ... 61
I²C 10-bit Slave Mode Operation ... 97
Reception ... 98
Transmission ... 98
I²C 7-bit Slave Mode Operation ... 97
Reception ... 97
Transmission ... 97
I²C Master Mode Operation ... 99
Baud Rate Generator ... 100
Clock Arbitration ... 100
Multi-Master Communication, Bus Collision and Bus Arbitration ... 100
Reception ... 99
Transmission ... 99
I²C Master Mode Support ... 99
I²C Module ... 95
Addresses ... 97
Bus Data Timing Characteristics
Master Mode ... 203
Slave Mode ... 205
Bus Data Timing Requirements
Master Mode ... 204
Slave Mode ... 206
Bus Start/Stop Bits Timing Characteristics
Master Mode ... 203
Slave Mode ... 205
General Call Address Support ... 99
Interrupts ... 99
IPMI Support ... 99
Operating Function Description ... 95
Operation During CPU Sleep and Idle Modes ... 100
Pin Configuration ... 95
Programmer's Model ... 95
Register Map ... 101
Registers ... 95
Slope Control ... 99
Software Controlled Clock Stretching (STREN = 1) ... 98
Various Modes ... 95
I²S Mode Operation ... 131
Data Justification ... 131
Frame and Data Word Length Selection ... 131
Idle Current (IIDLE) ... 177
In-Circuit Debugger (ICD 2) ... 159
In-Circuit Serial Programming (ICSP) ... 51, 143
Initialization Condition for RCON Register Case 1 ... 156
Initialization Condition for RCON Register Case 2 ... 156
Input Capture (CAPX) Timing Characteristics ... 193
Input Capture Module ... 81
Interrupts ... 82
Register Map ... 83
Input Capture Operation During Sleep and Idle Modes ... 82
CPU Idle Mode ... 82
CPU Sleep Mode ... 82
Input Capture Timing Requirements ... 193
Input Change Notification Module ... 66
Register Map for dsPIC30F6011A/6012 A (Bits 7-0) ... 66
Register Map for dsPIC30F6011A/6012A (Bits 15-8) ... 66
Register Map for dsPIC30F6013A/6014A (Bits 15-8) ... 66
Register Map for dsPIC30F6013A/6014A (Bits 7-0) ... 66
Instruction Addressing Modes ... 39
File Register Instructions ... 39
Fundamental Modes Supported ... 39
MAC Instructions ... 40
MCU Instructions ... 39
Move and Accumulator Instructions ... 40
Other Instructions ... 40
Instruction Set
Overview ... 164
Summary ... 161
Internet Address ... 227
Interrupt Controller
Register Map ... 50
Interrupt Priority ... 46
Interrupt Sequence ... 48
Interrupt Stack Frame ... 49
Interrupts ... 45

L

Load Conditions ... 183
Low Voltage Detect (LVD) ... 157
Low-Voltage Detect Characteristics ... 180
LVDL Characteristics ... 181

M

Memory Organization ... 25
Core Register Map ... 37
Microchip Internet Web Site ... 227
Modes of Operation
Disable ... 113
Initialization ... 113
Listen All Messages ... 113
Listen Only ... 113
Loopback ... 113
Normal Operation ... 113
Module ... 95
Modulo Addressing ... 40
Applicability ... 42
Operation Example ... 41
Start and End Address ... 41
W Address Register Selection ... 41
MPLAB ASM30 Assembler, Linker, Librarian ... 170
MPLAB Integrated Development Environment Software ... 169
MPLAB PM3 Device Programmer ... 172
MPLAB REAL ICE In-Circuit Emulator System ... 171
MPLINK Object Linker/MPLIB Object Librarian ... 170

N

NVM
Register Map ... 55

O

OC/PWM Module Timing Characteristics ... 194
Operating Current (IDD) ... 176
Oscillator
Control Registers ... 149
Operating Modes (Table) ... 144
System Overview ... 143
Oscillator Configurations ... 146
Fail-Safe Clock Monitor ... 148
Fast RC (FRC) ... 147
Initial Clock Source Selection ... 146
Low-Power RC (LPRC) ... 148
LP Oscillator Control ... 147
Phase Locked Loop (PLL) ... 147
Start-up Timer (OST) ... 147
Oscillator Selection ... 143
Oscillator Start-up Timer
Timing Characteristics ... 188
Timing Requirements ... 189
Output Compare Interrupts ... 88

Downloaded from Arrow.com.

Output Compare Module 85
Register Map 89
Timing Characteristics 193
Timing Requirements 193
Output Compare Operation During CPU Idle Mode 88
Output Compare Sleep Mode Operation 88

P

Packaging Information 213
Marking 213
Peripheral Module Disable (PMD) Registers 159
Pinout Descriptions 14
POR. *See* Power-on Reset.
PORTA
Register Map for dsPIC30F6013A/6014A 63
PORTB
Register Map for dsPIC30F6011A/6012A/6013A/6014A 63
PORTC
Register Map for dsPIC30F6011A/6012A 63
Register Map for dsPIC30F6013A/6014A 63
PORTD
Register Map for dsPIC30F6011A/6012A 64
Register Map for dsPIC30F6013A/6014A 64
PORTF
Register Map for dsPIC30F6011A/6012A 64
Register Map for dsPIC30F6013A/6014A 64
PORTG
Register Map for dsPIC30F6011A/6012A/6013A/6014A 65
Power Saving Modes
Idle 158
Sleep 157
Power-Down Current (IPD) 178
Power-on Reset (POR) 143
Oscillator Start-up Timer (OST) 143
Power-up Timer (PWRT) 143
Power-Saving Modes 157
Power-Saving Modes (Sleep and Idle) 143
Power-up Timer
Timing Characteristics 188
Timing Requirements 189
Program Address Space 25
Construction 27
Data Access from Program Memory
Using Program Space Visibility 29
Data Access from Program Memory
Using Table Instructions 28
Data Access from, Address Generation 27
Data Space Window into Operation 30
Data Table Access (Least Significant Word) 28
Data Table Access (MSB) 29
Memory Map for dsPIC30F6011A/6013A 26
Memory Map for dsPIC30F6012A/6014A 26
Table Instructions
TBLRDH 28
TBLRDL 28
TBLWTH 28
TBLWTL 28
Program and EEPROM Characteristics 182
Program Counter 18
Programmable 143
Programmer's Model 18
Diagram 19
Programming Operations 53
Algorithm for Program Flash 53
Erasing a Row of Program Memory 53
Initiating the Programming Sequence 54
Loading Write Latches 54
Protection Against Accidental Writes to OSCCON 149

R

Reader Response 228
Reset 143, 153
Reset Sequence 47
Reset Sources 47
Reset Sources
Brown-out Reset (BOR) 47
Illegal Instruction Trap 47
Trap Lockout 47
Uninitialized W Register Trap 47
Watchdog Time-out 47
Reset Timing Characteristics 188
Reset Timing Requirements 189
Resets
Brown-out Rest (BOR), Programmable 155
POR with Long Crystal Start-up Time 155
POR, Operating without FSCM and PWRT 155
Power-on Reset (POR) 153
RTSP Operation 52
Run-Time Self-Programming (RTSP) 51

S

Serial Peripheral Interface. *See* SPI
Simple Capture Event Mode 81
Buffer Operation 82
Hall Sensor Mode 82
Prescaler 81
Timer2 and Timer3 Selection Mode 82
Simple OC/PWM Mode Timing Requirements 194
Simple Output Compare Match Mode 86
Simple PWM Mode 86
Input Pin Fault Protection 86
Period 87
Software Simulator (MPLAB SIM) 171
Software Stack Pointer, Frame Pointer 18
CALL Stack Frame 35
SPI Module 91
Framed SPI Support 92
Operating Function Description 91
Operation During CPU Idle Mode 93
Operation During CPU Sleep Mode 93
SDOx Disable 91
Slave Select Synchronization 93
SPI1 Register Map 94
SPI2 Register Map 94
Timing Characteristics
Master Mode (CKE = 0) 198
Master Mode (CKE = 1) 199
Slave Mode (CKE = 1) 200, 201
Timing Requirements
Master Mode (CKE = 0) 198
Master Mode (CKE = 1) 199
Slave Mode (CKE = 0) 200
Slave Mode (CKE = 1) 202
Word and Byte Communication 91
STATUS Register 18
Symbols used in Opcode Descriptions 162
System Integration 143
Register Map for dsPIC30F601xA 160

© 2011 Microchip Technology Inc.

Downloaded from Arrow.com.

T

Table Instruction Operation Summary 51
Temperature and Voltage Specifications
AC 183
Timer1 Module 67
16-bit Asynchronous Counter Mode 67
16-bit Synchronous Counter Mode 67
16-bit Timer Mode 67
Gate Operation 68
Interrupt 68
Operation During Sleep Mode 68
Prescaler 68
Real-Time Clock 68
Interrupts 69
Oscillator Operation 69
Register Map 70
Timer2 and Timer3 Selection Mode 86
Timer2/3 Module 71
16-bit Timer Mode 71
32-bit Synchronous Counter Mode 71
32-bit Timer Mode 71
ADC Event Trigger 74
Gate Operation 74
Interrupt 74
Operation During Sleep Mode 74
Register Map 75
Timer Prescaler 74
Timer4/5 Module 77
Register Map 79
Timing Characteristics
ADC
Low-speed (ASAM = 0, SSRC = 000) 209
Band Gap Start-up Time 190
CAN Module I/O 207
CLKOUT and I/O 187
DCI Module
AC-Link Mode 197
Multichannel, I^{2}S Modes 195
External Clock 183
I^{2}C Bus Data
Master Mode 203
Slave Mode 205
I^{2}C Bus Start/Stop Bits
Master Mode 203
Slave Mode 205
Input Capture (CAPX) 193
OC/PWM Module 194
Oscillator Start-up Timer 188
Output Compare Module 193
Power-up Timer 188
Reset 188
SPI Module
Master Mode (CKE = 0) 198
Master Mode (CKE = 1) 199
Slave Mode (CKE = 0) 200
Slave Mode (CKE = 1) 201
Type A, B and C Timer External Clock 191
Watchdog Timer (WDT) 188
Timing Diagrams
CAN Bit 116
Frame Sync, AC-Link Start of Frame 126
Frame Sync, Multi-Channel Mode 126
I^{2}S Interface Frame Sync 126
PWM Output 87
Time-out Sequence on Power-up
($\overline{\text{MCLR}}$ Not Tied to VDD), Case 1 154
Time-out Sequence on Power-up
($\overline{\text{MCLR}}$ Not Tied to VDD), Case 2 154
Time-out Sequence on Power-up
($\overline{\text{MCLR}}$ Tied to VDD) 154
Timing Diagrams.See Timing Characteristics
Timing Requirements
Band Gap Start-up Time 190
Brown-out Reset 189
CAN Module I/O 207
CLKOUT and I/O 187
DCI Module
AC-Link Mode 197
Multichannel, I^{2}S Modes 196
External Clock 184
I^{2}C Bus Data (Master Mode) 204
I^{2}C Bus Data (Slave Mode) 206
Input Capture 193
Oscillator Start-up Timer 189
Output Compare Module 193
Power-up Timer 189
Reset 189
Simple OC/PWM Mode 194
SPI Module
Master Mode (CKE = 0) 198
Master Mode (CKE = 1) 199
Slave Mode (CKE = 0) 200
Slave Mode (CKE = 1) 202
Type A Timer External Clock 191
Type B Timer External Clock 192
Type C Timer External Clock 192
Watchdog Timer (WDT) 189
Timing Specifications
External Clock Requirements 184
PLL Clock 185
PLL Jitter 185
Trap Vectors 48
Traps 47
Hard and Soft 48
Sources 47
Address Error Trap 47
Math Error Trap 47
Oscillator Fail Trap 48
Stack Error Trap 48

U

UART Module
Address Detect Mode 107
Auto Baud Support 108
Baud Rate Generator 107
Enabling and Setting Up 105
Framing Error (FERR) 107
Idle Status 107
Loopback Mode 107
Operation During CPU Sleep and Idle Modes 108
Overview 103
Parity Error (PERR) 107
Receive Break 107
Receive Buffer (UxRXB) 106
Receive Buffer Overrun Error (OERR Bit) 106
Receive Interrupt 106
Receiving Data 106
Receiving in 8-bit or 9-bit Data Mode 106
Reception Error Handling 106
Transmit Break 106
Transmit Buffer (UxTXB) 105

Downloaded from Arrow.com.

Transmit Interrupt 106
Transmitting Data 105
Transmitting in 8-bit Data Mode 105
Transmitting in 9-bit Data Mode 105
UART1 Register Map 109
UART2 Register Map 109
UART Operation
Idle Mode 108
Sleep Mode 108
Unit ID Locations 143
Universal Asynchronous Receiver Transmitter. *See* UART.

W

Wake-up from Sleep 143
Wake-up from Sleep and Idle 49
Watchdog Timer (WDT) 143, 157
Enabling and Disabling 157
Operation 157
Timing Characteristics 188
Timing Requirements 189
WWW Address 227
WWW, On-Line Support 9

© 2011 Microchip Technology Inc.

Downloaded from Arrow.com.

THE MICROCHIP WEB SITE

Microchip provides online support via our WWW site at www.microchip.com. This web site is used as a means to make files and information easily available to customers. Accessible by using your favorite Internet browser, the web site contains the following information:

- **Product Support** – Data sheets and errata, application notes and sample programs, design resources, user's guides and hardware support documents, latest software releases and archived software
- **General Technical Support** – Frequently Asked Questions (FAQ), technical support requests, online discussion groups, Microchip consultant program member listing
- **Business of Microchip** – Product selector and ordering guides, latest Microchip press releases, listing of seminars and events, listings of Microchip sales offices, distributors and factory representatives

CUSTOMER CHANGE NOTIFICATION SERVICE

Microchip's customer notification service helps keep customers current on Microchip products. Subscribers will receive e-mail notification whenever there are changes, updates, revisions or errata related to a specified product family or development tool of interest.

To register, access the Microchip web site at www.microchip.com. Under "Support", click on "Customer Change Notification" and follow the registration instructions.

CUSTOMER SUPPORT

Users of Microchip products can receive assistance through several channels:

- Distributor or Representative
- Local Sales Office
- Field Application Engineer (FAE)
- Technical Support
- Development Systems Information Line

Customers should contact their distributor, representative or field application engineer (FAE) for support. Local sales offices are also available to help customers. A listing of sales offices and locations is included in the back of this document.

Technical support is available through the web site at: http://support.microchip.com

Downloaded from Arrow.com.

READER RESPONSE

It is our intention to provide you with the best documentation possible to ensure successful use of your Microchip product. If you wish to provide your comments on organization, clarity, subject matter, and ways in which our documentation can better serve you, please FAX your comments to the Technical Publications Manager at (480) 792-4150.

Please list the following information, and use this outline to provide us with your comments about this document.

TO: Technical Publications Manager

RE: Reader Response

Total Pages Sent _____

From: Name _____

Company _____

Address _____

City / State / ZIP / Country _____

Telephone: (_____) _____ - _____ FAX: (_____) _____ - _____

Application (optional):

Would you like a reply? ___Y ___N

Device: dsPIC30F6011A/6012A/6013A/6014A Literature Number: DS70143E

Questions:

1. What are the best features of this document?

_____

_____

2. How does this document meet your hardware and software development needs?

_____

_____

3. Do you find the organization of this document easy to follow? If not, why?

_____

_____

4. What additions to the document do you think would enhance the structure and subject?

_____

_____

5. What deletions from the document could be made without affecting the overall usefulness?

_____

_____

6. Is there any incorrect or misleading information (what and where)?

_____

_____

7. How would you improve this document?

_____

_____

© 2011 Microchip Technology Inc.

Downloaded from Arrow.com.

PRODUCT IDENTIFICATION SYSTEM

To order or obtain information, e.g., on pricing or delivery, refer to the factory or the listed sales office.

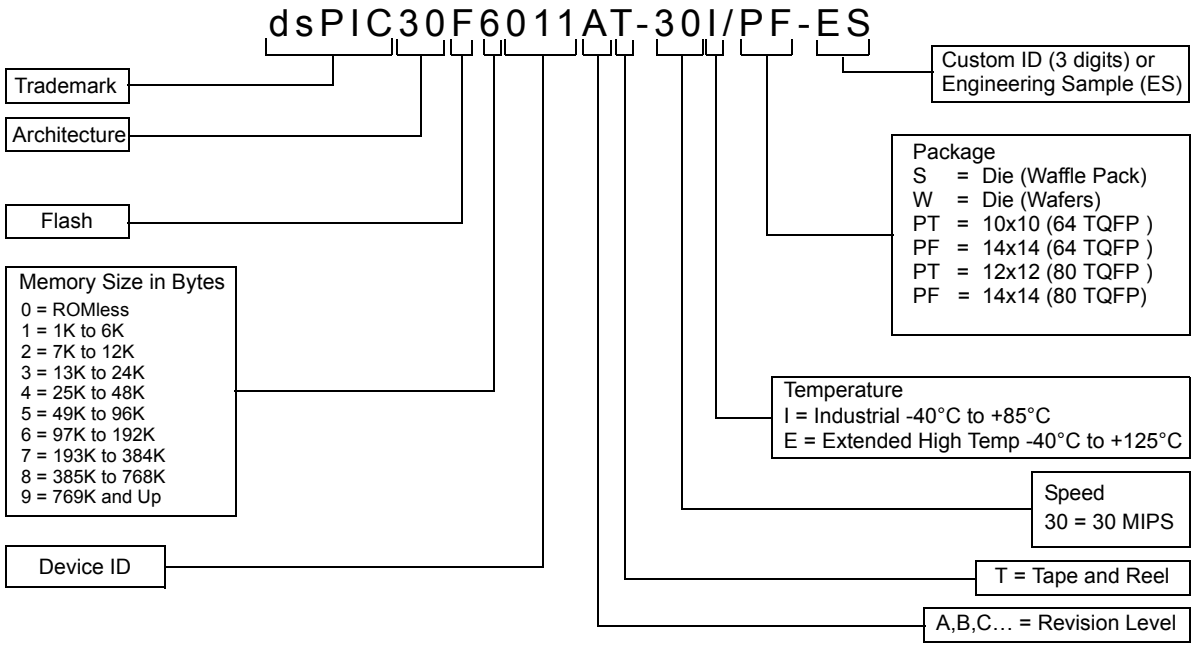

Example:

dsPIC30F6011AT-30I/PF = 30 MIPS, Industrial temp., TQFP (14x14) package, Rev. A

Downloaded from Arrow.com.

Worldwide Sales and Service

AMERICAS

Corporate Office
2355 West Chandler Blvd.
Chandler, AZ 85224-6199
Tel: 480-792-7200
Fax: 480-792-7277
Technical Support:
http://support.microchip.com
Web Address:
www.microchip.com

Atlanta
Duluth, GA
Tel: 678-957-9614
Fax: 678-957-1455

Boston
Westborough, MA
Tel: 774-760-0087
Fax: 774-760-0088

Chicago
Itasca, IL
Tel: 630-285-0071
Fax: 630-285-0075

Cleveland
Independence, OH
Tel: 216-447-0464
Fax: 216-447-0643

Dallas
Addison, TX
Tel: 972-818-7423
Fax: 972-818-2924

Detroit
Farmington Hills, MI
Tel: 248-538-2250
Fax: 248-538-2260

Kokomo
Kokomo, IN
Tel: 765-864-8360
Fax: 765-864-8387

Los Angeles
Mission Viejo, CA
Tel: 949-462-9523
Fax: 949-462-9608

Santa Clara
Santa Clara, CA
Tel: 408-961-6444
Fax: 408-961-6445

Toronto
Mississauga, Ontario,
Canada
Tel: 905-673-0699
Fax: 905-673-6509

ASIA/PACIFIC

Asia Pacific Office
Suites 3707-14, 37th Floor
Tower 6, The Gateway
Harbour City, Kowloon
Hong Kong
Tel: 852-2401-1200
Fax: 852-2401-3431

Australia - Sydney
Tel: 61-2-9868-6733
Fax: 61-2-9868-6755

China - Beijing
Tel: 86-10-8528-2100
Fax: 86-10-8528-2104

China - Chengdu
Tel: 86-28-8665-5511
Fax: 86-28-8665-7889

China - Chongqing
Tel: 86-23-8980-9588
Fax: 86-23-8980-9500

China - Hong Kong SAR
Tel: 852-2401-1200
Fax: 852-2401-3431

China - Nanjing
Tel: 86-25-8473-2460
Fax: 86-25-8473-2470

China - Qingdao
Tel: 86-532-8502-7355
Fax: 86-532-8502-7205

China - Shanghai
Tel: 86-21-5407-5533
Fax: 86-21-5407-5066

China - Shenyang
Tel: 86-24-2334-2829
Fax: 86-24-2334-2393

China - Shenzhen
Tel: 86-755-8203-2660
Fax: 86-755-8203-1760

China - Wuhan
Tel: 86-27-5980-5300
Fax: 86-27-5980-5118

China - Xian
Tel: 86-29-8833-7252
Fax: 86-29-8833-7256

China - Xiamen
Tel: 86-592-2388138
Fax: 86-592-2388130

China - Zhuhai
Tel: 86-756-3210040
Fax: 86-756-3210049

ASIA/PACIFIC

India - Bangalore
Tel: 91-80-3090-4444
Fax: 91-80-3090-4123

India - New Delhi
Tel: 91-11-4160-8631
Fax: 91-11-4160-8632

India - Pune
Tel: 91-20-2566-1512
Fax: 91-20-2566-1513

Japan - Yokohama
Tel: 81-45-471- 6166
Fax: 81-45-471-6122

Korea - Daegu
Tel: 82-53-744-4301
Fax: 82-53-744-4302

Korea - Seoul
Tel: 82-2-554-7200
Fax: 82-2-558-5932 or
82-2-558-5934

Malaysia - Kuala Lumpur
Tel: 60-3-6201-9857
Fax: 60-3-6201-9859

Malaysia - Penang
Tel: 60-4-227-8870
Fax: 60-4-227-4068

Philippines - Manila
Tel: 63-2-634-9065
Fax: 63-2-634-9069

Singapore
Tel: 65-6334-8870
Fax: 65-6334-8850

Taiwan - Hsin Chu
Tel: 886-3-6578-300
Fax: 886-3-6578-370

Taiwan - Kaohsiung
Tel: 886-7-213-7830
Fax: 886-7-330-9305

Taiwan - Taipei
Tel: 886-2-2500-6610
Fax: 886-2-2508-0102

Thailand - Bangkok
Tel: 66-2-694-1351
Fax: 66-2-694-1350

EUROPE

Austria - Wels
Tel: 43-7242-2244-39
Fax: 43-7242-2244-393

Denmark - Copenhagen
Tel: 45-4450-2828
Fax: 45-4485-2829

France - Paris
Tel: 33-1-69-53-63-20
Fax: 33-1-69-30-90-79

Germany - Munich
Tel: 49-89-627-144-0
Fax: 49-89-627-144-44

Italy - Milan
Tel: 39-0331-742611
Fax: 39-0331-466781

Netherlands - Drunen
Tel: 31-416-690399
Fax: 31-416-690340

Spain - Madrid
Tel: 34-91-708-08-90
Fax: 34-91-708-08-91

UK - Wokingham
Tel: 44-118-921-5869
Fax: 44-118-921-5820

08/04/10

© 2011 Microchip Technology Inc.

Downloaded from Arrow.com.