Package Type

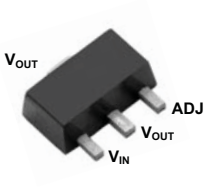

TO-243AA (SOT-89)

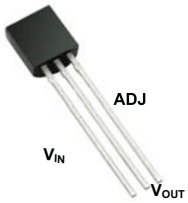

TO-92

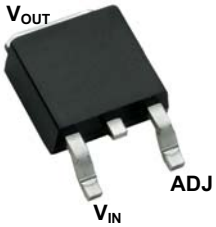

TO-252

See Table 2-1 for pin information

Functional Block Diagram

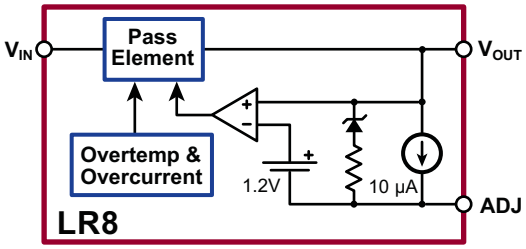

© 2015-2017 Microchip Technology Inc.

Downloaded from Arrow.com.

1.0 ELECTRICAL CHARACTERISTICS

ABSOLUTE MAXIMUM RATINGS†

V_{IN} Input voltage (voltages ref to ADJ)..... -0.5 to +480V
Output voltage range..... 0.5 to +470V
Operating ambient temperature range.....–40°C to +85°C
Operating junction temperature range .....–40°C to +125°C
Storage temperature .....–65°C to +150°C

† Notice: Stresses above those listed under “Maximum Ratings” may cause permanent damage to the device. This is a stress rating only and functional operation of the device at those or any other conditions above those indicated in the operational listings of this specification is not implied. Exposure to maximum rating conditions for extended periods may affect device reliability.

Downloaded from Arrow.com.

ELECTRICAL CHARACTERISTICS [1]

Parameter	Sym.	Min.	Typ.	Max.	Units	Conditions
Input to output voltage difference	V_{IN}- V_{OUT}	12		450	V	
Overall output voltage regulation	V_{OUT}	1.14	1.20	1.26	V	13.2V < V_{IN} < 400V, R_1 = 2.4 kΩ, R_2 = 0
		375	400	425	V	R_1 = 2.4 kΩ, R_2 = 782 kΩ
Line regulation	ΔV_{OUT}		0.003	0.01	%/V	17V < V_{IN} < 400V, V_{OUT} = 5V, I_{OUT} = 0.5mA
Load regulation			1.4	3.0	%	V_{IN} = 17V, V_{OUT} = 5V, 0.5 mA < I_{OUT} < 10 mA
Temperature regulation		-1		+1	%	V_{IN} = 17V, V_{OUT} = 5V, I_{OUT} = 10 mA, -40°C < T_A < 85°C
Output current limit	I_{OUT}	10		30	mA	T_J < 85°C, V_{IN} - V_{OUT} = 12V
				0.5	mA	T_J > 125°C, V_{IN} - V_{OUT} = 450V
Minimum output current	I_{OUT}		0.3	0.5	mA	Includes R_1 and load current
Adjust output current	I_{ADJ}	5.0	10	15	µA	
Minimum output load capacitance	C_{LOAD}	1.0			µF	
Ripple rejection ratio	$\Delta V_{OUT}/\Delta V_{IN}$	50	60		dB	120 Hz, V_{OUT} = 5V
Junction temperature limit	T_{LIMIT}	125			°C	

1 Test Conditions unless otherwise specified: -40°C <T_A < 85°C.

TABLE 1-1: TYPICAL THERMAL RESISTANCE

Package	θ_{ja}
TO-252 (D-PAK)	81°C/W
TO-92	132°C/W
TO-243AA (SOT-89)	133°C/W

TABLE 1-2: THERMAL CHARACTERISTICS

Package	Power Dissipation @T_A = 2.5°C	θ_{jc} °C/W	θ_{ja} °C/W
TO-92	0.74W	125	170
TO-243AA (SOT-89)	1.6W	15	78[1]
TO-252 (D-PAK)	2.5W	6.25	50[1]

1 Mounted on FR4 board, 25 mm x 2 mm x 1.57 mm

© 2015-2017 Microchip Technology Inc.

Downloaded from Arrow.com.

2.0 PIN DESCRIPTION

The locations of the pins are listed in Package Type.

TABLE 2-1: PIN DESCRIPTION

Function	Description
V_{IN}	Regulator input. 13.2-450V.
V_{OUT}	Regulator output.
ADJ	Output voltage adjust.

3.0 TYPICAL APPLICATION CIRCUITS

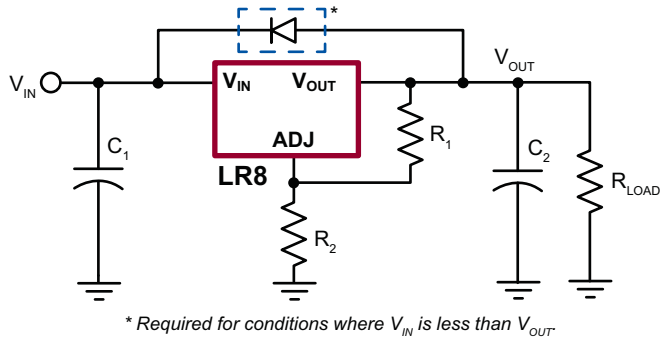

FIGURE 3-1: *Typical Application Circuit.*

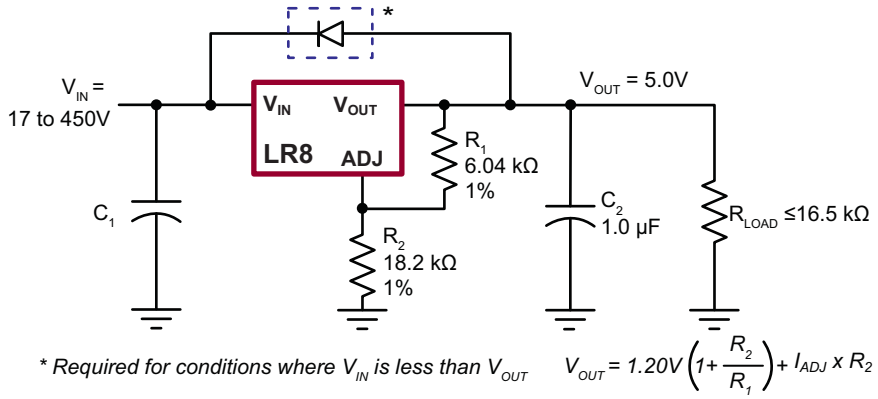

FIGURE 3-2: *High-input Voltage, 5.0V Output Linear Regulator.*

Downloaded from Arrow.com.

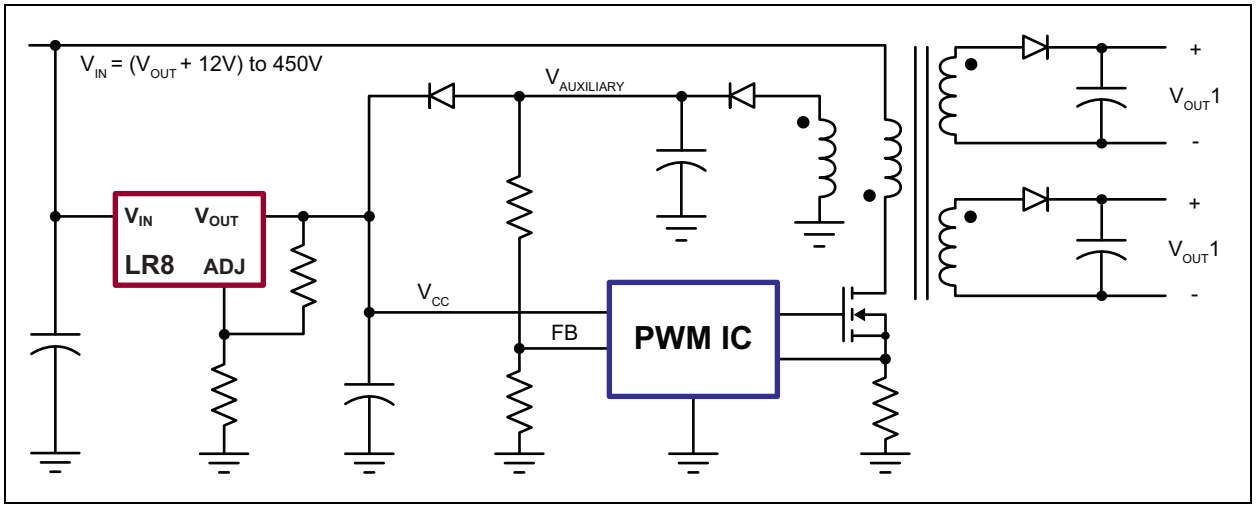

FIGURE 3-3: *SMPS Start-Up Circuit.*

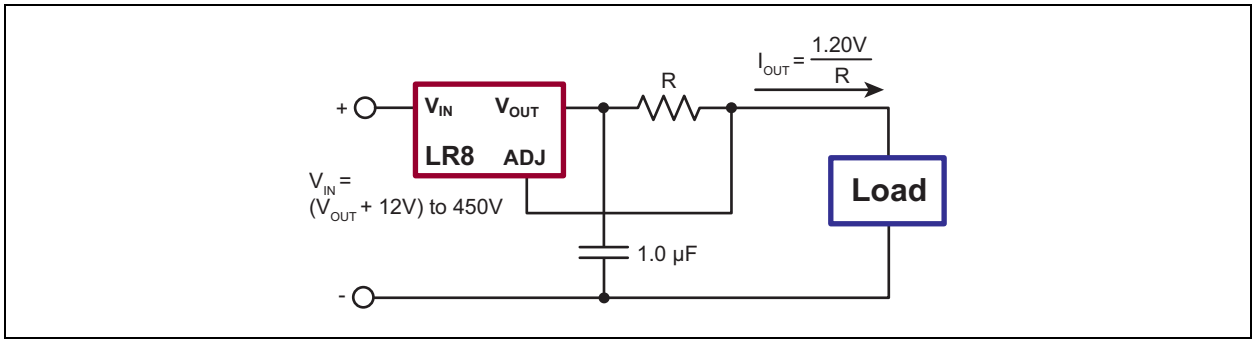

FIGURE 3-4: *High-voltage, Adjustable, Constant-Current Source.*

© 2015-2017 Microchip Technology Inc.

Downloaded from Arrow.com.

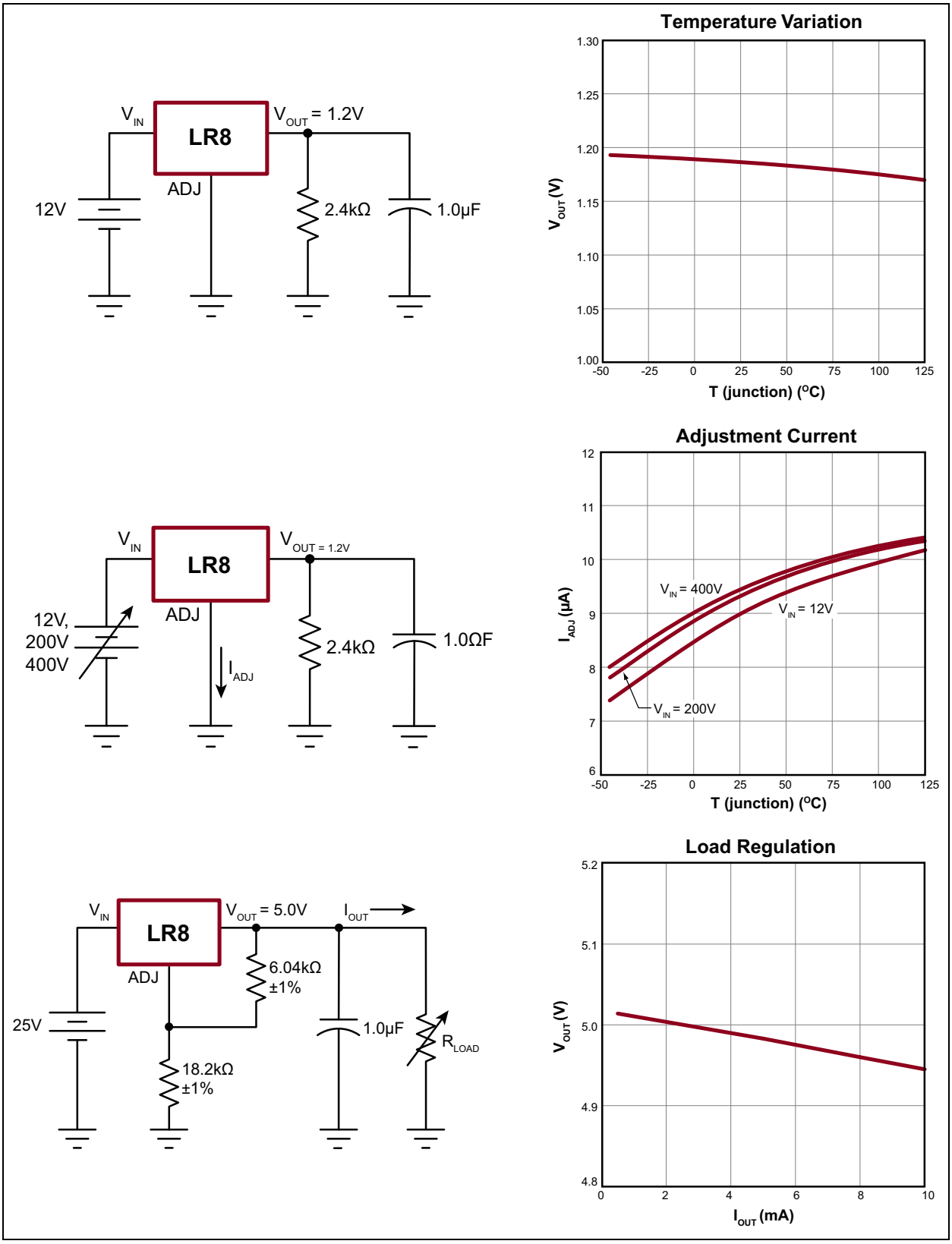

FIGURE 3-5: *Typical Performance Curves 1 of 3.*

Downloaded from Arrow.com.

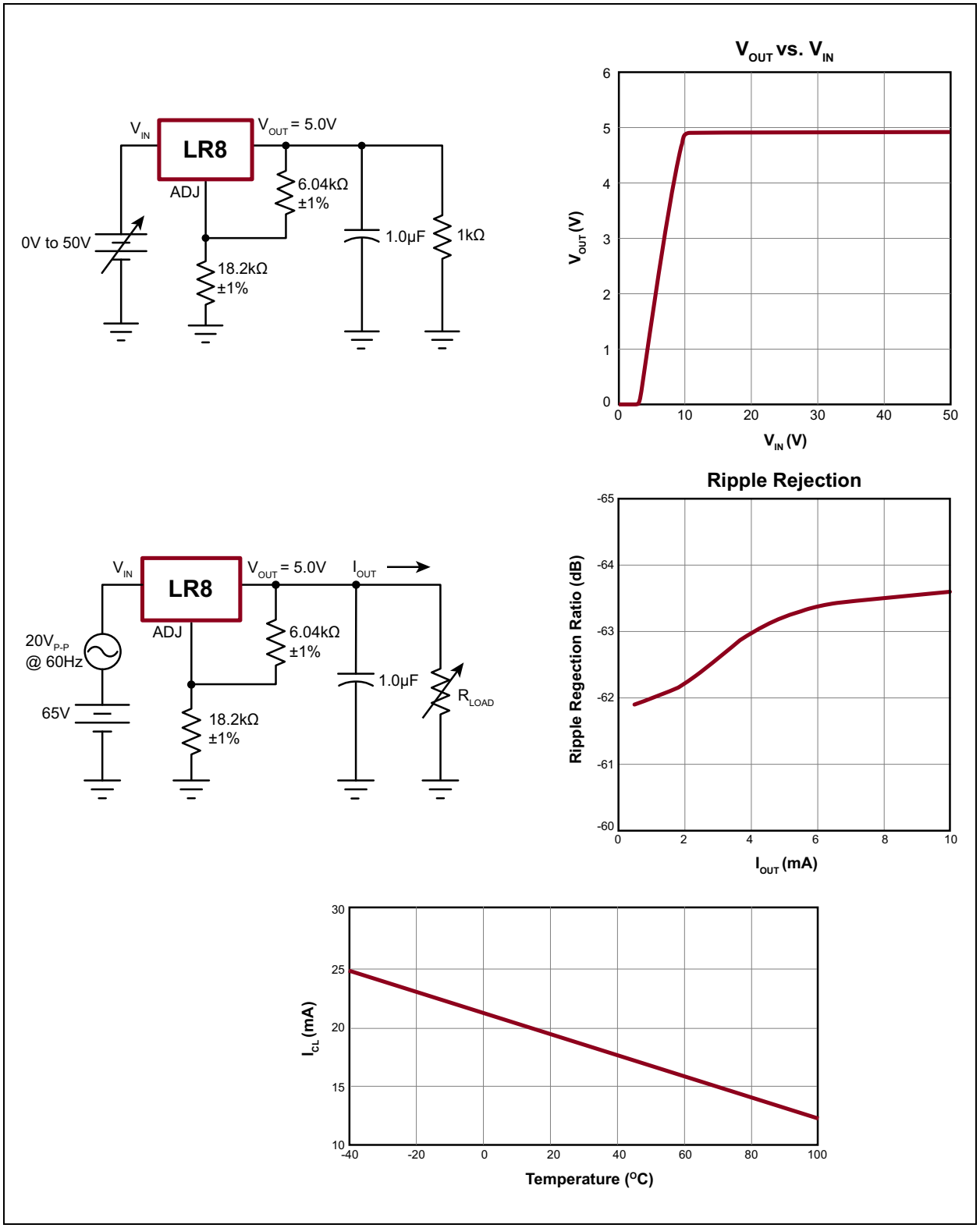

FIGURE 3-6: *Typical Performance Curves 2 of 3.*

© 2015-2017 Microchip Technology Inc.

Downloaded from Arrow.com.

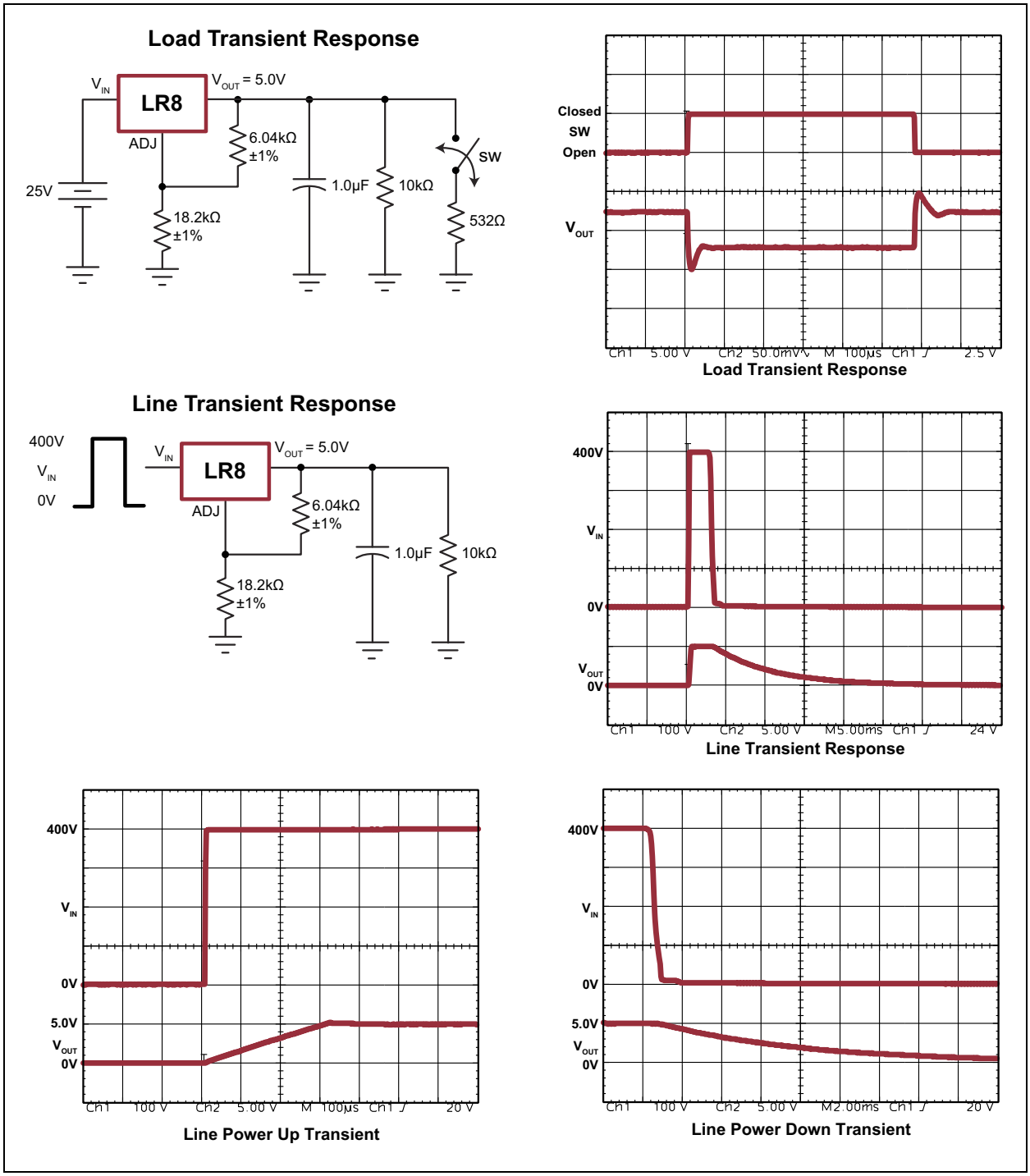

FIGURE 3-7: *Typical Performance Curves 3 of 3.*

Downloaded from Arrow.com.

4.0 PACKAGING INFORMATION

4.1 Package Marking Information

3-lead TO-92

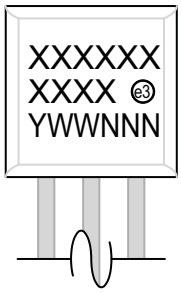

Example

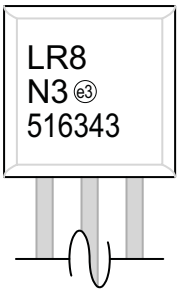

3-lead TO-243AA *
(SOT-89)

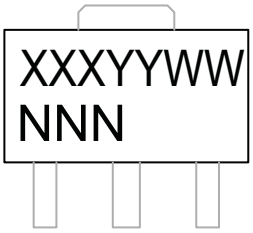

Example

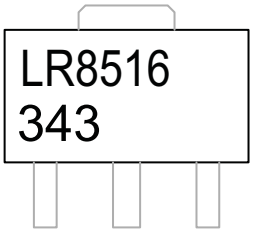

3-lead TO-252
(D-PAK)

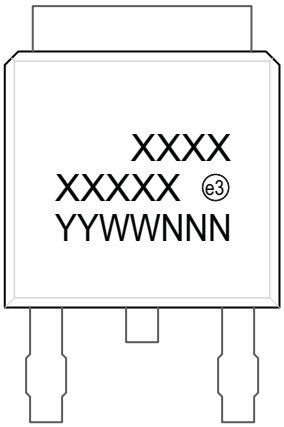

Example

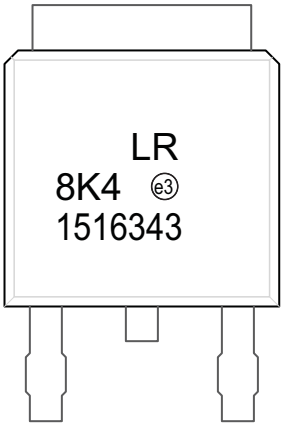

Legend:	XX...X	Product Code or Customer-specific information
	Y	Year code (last digit of calendar year)
	YY	Year code (last 2 digits of calendar year)
	WW	Week code (week of January 1 is week ‘01’)
	NNN	Alphanumeric traceability code
	e3	Pb-free JEDEC® designator for Matte Tin (Sn)
	*	This package is Pb-free. The Pb-free JEDEC designator (e3) can be found on the outer packaging for this package.
Note:	In the event the full Microchip part number cannot be marked on one line, it will be carried over to the next line, thus limiting the number of available characters for product code or customer-specific information. Package may or not include the corporate logo.	

© 2015-2017 Microchip Technology Inc.

Downloaded from Arrow.com.

3-Lead TO-252 (D-PAK) Package Outline (K4)

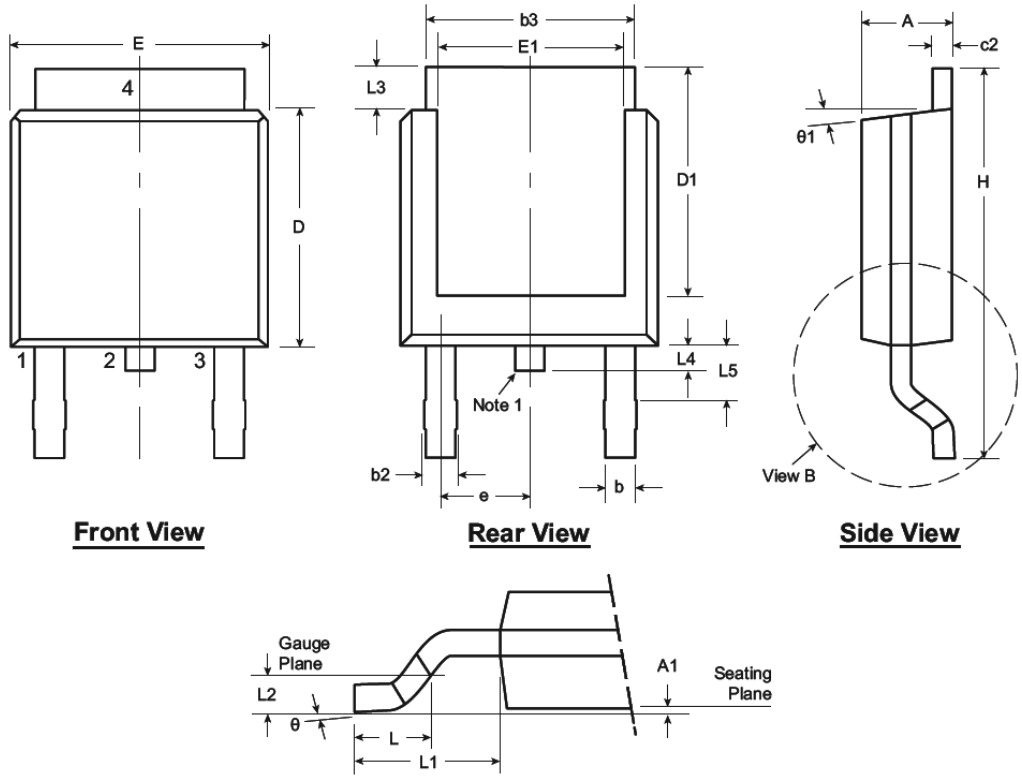

Front View **Rear View** **Side View**

View B

Note: For the most current package drawings, see the Microchip Packaging Specification at www.microchip.com/packaging.

Note:

1. *Although 4 terminal locations are shown, only 3 are functional. Lead number 2 was removed.*

Symbol		A	A1	b	b2	b3	c2	D	D1	E	E1	e	H	L	L1	L2	L3	L4	L5	θ	θ1
Dimen-sion (inches)	MIN	.086	.000*	.025	.030	.195	.018	.235	.205	.250	.170	.090 BSC	.370	.055	.108 REF	.020 BSC	.035	.025*	.035†	0º	0º
	NOM	-	-	-	-	-	-	.240	-	-	-		-	.060			-	-	-	-	-
	MAX	.094	.005	.035	.045	.215	.035	.245	.217*	.265	.200*		.410	.070			.050	.040	.060	10º	15º

JEDEC Registration TO-252, Variation AA, Issue E, June 2004.
** This dimension is not specified in the JEDEC drawing.*
† This dimension differs from the JEDEC drawing.
Drawings not to scale.

Downloaded from Arrow.com.

3-Lead TO-243AA (SOT-89) Package Outline (N8)

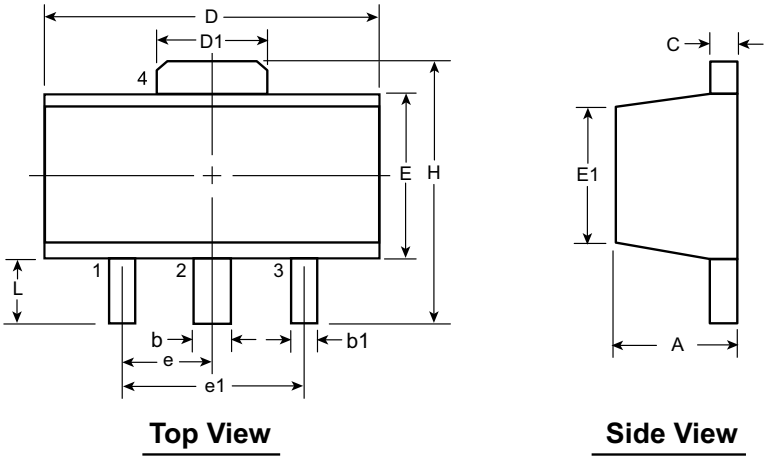

Note: For the most current package drawings, see the Microchip Packaging Specification at www.microchip.com/packaging.

Symbol		A	b	b1	C	D	D1	E	E1	e	e1	H	L
Dimensions (mm)	MIN	1.40	0.44	0.36	0.35	4.40	1.62	2.29	2.00†	1.50 BSC	3.00 BSC	3.94	0.73†
	NOM	-	-	-	-	-	-	-	-			-	-
	MAX	1.60	0.56	0.48	0.44	4.60	1.83	2.60	2.29			4.25	1.20

JEDEC Registration TO-243, Variation AA, Issue C, July 1986.
† This dimension differs from the JEDEC drawing
Drawings not to scale.

© 2015-2017 Microchip Technology Inc.

Downloaded from Arrow.com.

3-Lead TO-92 Package Outline (L/LL/N3)

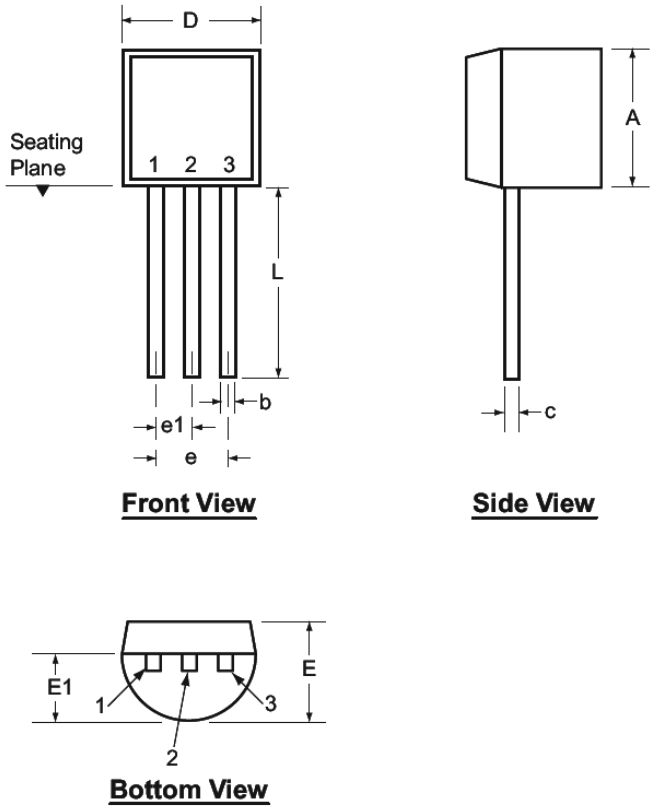

Note: For the most current package drawings, see the Microchip Packaging Specification at www.microchip.com/packaging.

Symbol		A	b	c	D	E	E1	e	e1	L
Dimensions (inches)	MIN	.170	.014†	.014†	.175	.125	.080	.095	.045	.500
	NOM	-	-	-	-	-	-	-	-	-
	MAX	.210	.022†	.022†	.205	.165	.105	.105	.055	.610*

JEDEC Registration TO-92.
** This dimension is not specified in the JEDEC drawing.*
† This dimension differs from the JEDEC drawing.
Drawings not to scale.

Downloaded from Arrow.com.

NOTES:

© 2015-2017 Microchip Technology Inc.

Downloaded from Arrow.com.

APPENDIX A: REVISION HISTORY

Revision B (November 2017)

The following is the list of modifications:

1. Updated Figure 3-2.
2. Various typographical edits.

Revision A (June 2015)

- Original Release of this Document.

Downloaded from Arrow.com.

PRODUCT IDENTIFICATION SYSTEM

To order or obtain information, e.g., on pricing or delivery, refer to the factory or the listed sales office.

PART NO.	XX	-	X	-	X
Device	Package Options		Environmental		Media Type

Device:	LR8	= High-Input Voltage, Adjustable, 3-Terminal, Linear Regulator
Package:	N3	= TO-92
	K4	= TO-252 (D-PAK)
	N8	= TO-243AA (SOT-89)
Environmental	G	= Lead (Pb)-free/ROHS-compliant package
Media Type:	(blank)	= 1000/Bag for N3 packages
		= 2000/Reel for K4 packages
		= 2000/Reel for N8 packages
	P003	= 2000/Reel for N3 package

Examples:

a)	LR8N3-G	TO-92 package, 1000/bag
b)	LR8N3-G-P003:	TO-92 package, 2000/reel.
c)	LR8K4-G	TO-252 package, 2000/reel
d)	LR8N8-G	TO-243AA package, 2000/reel

© 2015-2017 Microchip Technology Inc.

Downloaded from Arrow.com.

Note the following details of the code protection feature on Microchip devices:

- Microchip products meet the specification contained in their particular Microchip Data Sheet.
- Microchip believes that its family of products is one of the most secure families of its kind on the market today, when used in the intended manner and under normal conditions.
- There are dishonest and possibly illegal methods used to breach the code protection feature. All of these methods, to our knowledge, require using the Microchip products in a manner outside the operating specifications contained in Microchip's Data Sheets. Most likely, the person doing so is engaged in theft of intellectual property.
- Microchip is willing to work with the customer who is concerned about the integrity of their code.
- Neither Microchip nor any other semiconductor manufacturer can guarantee the security of their code. Code protection does not mean that we are guaranteeing the product as "unbreakable."

Code protection is constantly evolving. We at Microchip are committed to continuously improving the code protection features of our products. Attempts to break Microchip's code protection feature may be a violation of the Digital Millennium Copyright Act. If such acts allow unauthorized access to your software or other copyrighted work, you may have a right to sue for relief under that Act.

Information contained in this publication regarding device applications and the like is provided only for your convenience and may be superseded by updates. It is your responsibility to ensure that your application meets with your specifications. MICROCHIP MAKES NO REPRESENTATIONS OR WARRANTIES OF ANY KIND WHETHER EXPRESS OR IMPLIED, WRITTEN OR ORAL, STATUTORY OR OTHERWISE, RELATED TO THE INFORMATION, INCLUDING BUT NOT LIMITED TO ITS CONDITION, QUALITY, PERFORMANCE, MERCHANTABILITY OR FITNESS FOR PURPOSE**.** Microchip disclaims all liability arising from this information and its use. Use of Microchip devices in life support and/or safety applications is entirely at the buyer's risk, and the buyer agrees to defend, indemnify and hold harmless Microchip from any and all damages, claims, suits, or expenses resulting from such use. No licenses are conveyed, implicitly or otherwise, under any Microchip intellectual property rights unless otherwise stated.

Microchip received ISO/TS-16949:2009 certification for its worldwide headquarters, design and wafer fabrication facilities in Chandler and Tempe, Arizona; Gresham, Oregon and design centers in California and India. The Company's quality system processes and procedures are for its PIC® MCUs and dsPIC® DSCs, KEELOQ® code hopping devices, Serial EEPROMs, microperipherals, nonvolatile memory and analog products. In addition, Microchip's quality system for the design and manufacture of development systems is ISO 9001:2000 certified.

QUALITY MANAGEMENT SYSTEM
CERTIFIED BY DNV
═ ISO/TS 16949 ═

Trademarks

The Microchip name and logo, the Microchip logo, AnyRate, AVR, AVR logo, AVR Freaks, BeaconThings, BitCloud, CryptoMemory, CryptoRF, dsPIC, FlashFlex, flexPWR, Heldo, JukeBlox, KEELOQ, KEELOQ logo, Kleer, LANCheck, LINK MD, maXStylus, maXTouch, MediaLB, megaAVR, MOST, MOST logo, MPLAB, OptoLyzer, PIC, picoPower, PICSTART, PIC32 logo, Prochip Designer, QTouch, RightTouch, SAM-BA, SpyNIC, SST, SST Logo, SuperFlash, tinyAVR, UNI/O, and XMEGA are registered trademarks of Microchip Technology Incorporated in the U.S.A. and other countries.

ClockWorks, The Embedded Control Solutions Company, EtherSynch, Hyper Speed Control, HyperLight Load, IntelliMOS, mTouch, Precision Edge, and Quiet-Wire are registered trademarks of Microchip Technology Incorporated in the U.S.A.

Adjacent Key Suppression, AKS, Analog-for-the-Digital Age, Any Capacitor, AnyIn, AnyOut, BodyCom, chipKIT, chipKIT logo, CodeGuard, CryptoAuthentication, CryptoCompanion, CryptoController, dsPICDEM, dsPICDEM.net, Dynamic Average Matching, DAM, ECAN, EtherGREEN, In-Circuit Serial Programming, ICSP, Inter-Chip Connectivity, JitterBlocker, KleerNet, KleerNet logo, Mindi, MiWi, motorBench, MPASM, MPF, MPLAB Certified logo, MPLIB, MPLINK, MultiTRAK, NetDetach, Omniscient Code Generation, PICDEM, PICDEM.net, PICkit, PICtail, PureSilicon, QMatrix, RightTouch logo, REAL ICE, Ripple Blocker, SAM-ICE, Serial Quad I/O, SMART-I.S., SQI, SuperSwitcher, SuperSwitcher II, Total Endurance, TSHARC, USBCheck, VariSense, ViewSpan, WiperLock, Wireless DNA, and ZENA are trademarks of Microchip Technology Incorporated in the U.S.A. and other countries.

SQTP is a service mark of Microchip Technology Incorporated in the U.S.A.

Silicon Storage Technology is a registered trademark of Microchip Technology Inc. in other countries.

GestIC is a registered trademark of Microchip Technology Germany II GmbH & Co. KG, a subsidiary of Microchip Technology Inc., in other countries.

All other trademarks mentioned herein are property of their respective companies.

© 2015-2017, Microchip Technology Incorporated, All Rights Reserved.

ISBN: 978-1-5224-2321-8

Downloaded from Arrow.com.

Worldwide Sales and Service

AMERICAS

Corporate Office
2355 West Chandler Blvd.
Chandler, AZ 85224-6199
Tel: 480-792-7200
Fax: 480-792-7277
Technical Support:
http://www.microchip.com/support
Web Address:
www.microchip.com

Atlanta
Duluth, GA
Tel: 678-957-9614
Fax: 678-957-1455

Austin, TX
Tel: 512-257-3370

Boston
Westborough, MA
Tel: 774-760-0087
Fax: 774-760-0088

Chicago
Itasca, IL
Tel: 630-285-0071
Fax: 630-285-0075

Dallas
Addison, TX
Tel: 972-818-7423
Fax: 972-818-2924

Detroit
Novi, MI
Tel: 248-848-4000

Houston, TX
Tel: 281-894-5983

Indianapolis
Noblesville, IN
Tel: 317-773-8323
Fax: 317-773-5453
Tel: 317-536-2380

Los Angeles
Mission Viejo, CA
Tel: 949-462-9523
Fax: 949-462-9608
Tel: 951-273-7800

Raleigh, NC
Tel: 919-844-7510

New York, NY
Tel: 631-435-6000

San Jose, CA
Tel: 408-735-9110
Tel: 408-436-4270

Canada - Toronto
Tel: 905-695-1980
Fax: 905-695-2078

ASIA/PACIFIC

Australia - Sydney
Tel: 61-2-9868-6733

China - Beijing
Tel: 86-10-8569-7000

China - Chengdu
Tel: 86-28-8665-5511

China - Chongqing
Tel: 86-23-8980-9588

China - Dongguan
Tel: 86-769-8702-9880

China - Guangzhou
Tel: 86-20-8755-8029

China - Hangzhou
Tel: 86-571-8792-8115

China - Hong Kong SAR
Tel: 852-2943-5100

China - Nanjing
Tel: 86-25-8473-2460

China - Qingdao
Tel: 86-532-8502-7355

China - Shanghai
Tel: 86-21-3326-8000

China - Shenyang
Tel: 86-24-2334-2829

China - Shenzhen
Tel: 86-755-8864-2200

China - Suzhou
Tel: 86-186-6233-1526

China - Wuhan
Tel: 86-27-5980-5300

China - Xian
Tel: 86-29-8833-7252

China - Xiamen
Tel: 86-592-2388138

China - Zhuhai
Tel: 86-756-3210040

ASIA/PACIFIC

India - Bangalore
Tel: 91-80-3090-4444

India - New Delhi
Tel: 91-11-4160-8631

India - Pune
Tel: 91-20-4121-0141

Japan - Osaka
Tel: 81-6-6152-7160

Japan - Tokyo
Tel: 81-3-6880- 3770

Korea - Daegu
Tel: 82-53-744-4301

Korea - Seoul
Tel: 82-2-554-7200

Malaysia - Kuala Lumpur
Tel: 60-3-7651-7906

Malaysia - Penang
Tel: 60-4-227-8870

Philippines - Manila
Tel: 63-2-634-9065

Singapore
Tel: 65-6334-8870

Taiwan - Hsin Chu
Tel: 886-3-577-8366

Taiwan - Kaohsiung
Tel: 886-7-213-7830

Taiwan - Taipei
Tel: 886-2-2508-8600

Thailand - Bangkok
Tel: 66-2-694-1351

Vietnam - Ho Chi Minh
Tel: 84-28-5448-2100

EUROPE

Austria - Wels
Tel: 43-7242-2244-39
Fax: 43-7242-2244-393

Denmark - Copenhagen
Tel: 45-4450-2828
Fax: 45-4485-2829

Finland - Espoo
Tel: 358-9-4520-820

France - Paris
Tel: 33-1-69-53-63-20
Fax: 33-1-69-30-90-79

Germany - Garching
Tel: 49-8931-9700

Germany - Haan
Tel: 49-2129-3766400

Germany - Heilbronn
Tel: 49-7131-67-3636

Germany - Karlsruhe
Tel: 49-721-625370

Germany - Munich
Tel: 49-89-627-144-0
Fax: 49-89-627-144-44

Germany - Rosenheim
Tel: 49-8031-354-560

Israel - Ra'anana
Tel: 972-9-744-7705

Italy - Milan
Tel: 39-0331-742611
Fax: 39-0331-466781

Italy - Padova
Tel: 39-049-7625286

Netherlands - Drunen
Tel: 31-416-690399
Fax: 31-416-690340

Norway - Trondheim
Tel: 47-7289-7561

Poland - Warsaw
Tel: 48-22-3325737

Romania - Bucharest
Tel: 40-21-407-87-50

Spain - Madrid
Tel: 34-91-708-08-90
Fax: 34-91-708-08-91

Sweden - Gothenberg
Tel: 46-31-704-60-40

Sweden - Stockholm
Tel: 46-8-5090-4654

UK - Wokingham
Tel: 44-118-921-5800
Fax: 44-118-921-5820

© 2015-2017 Microchip Technology Inc.

Downloaded from Arrow.com.