© COPYRIGHT TRP connector ALL RIGHTS RESERVED

Downloaded from Arrow.com.

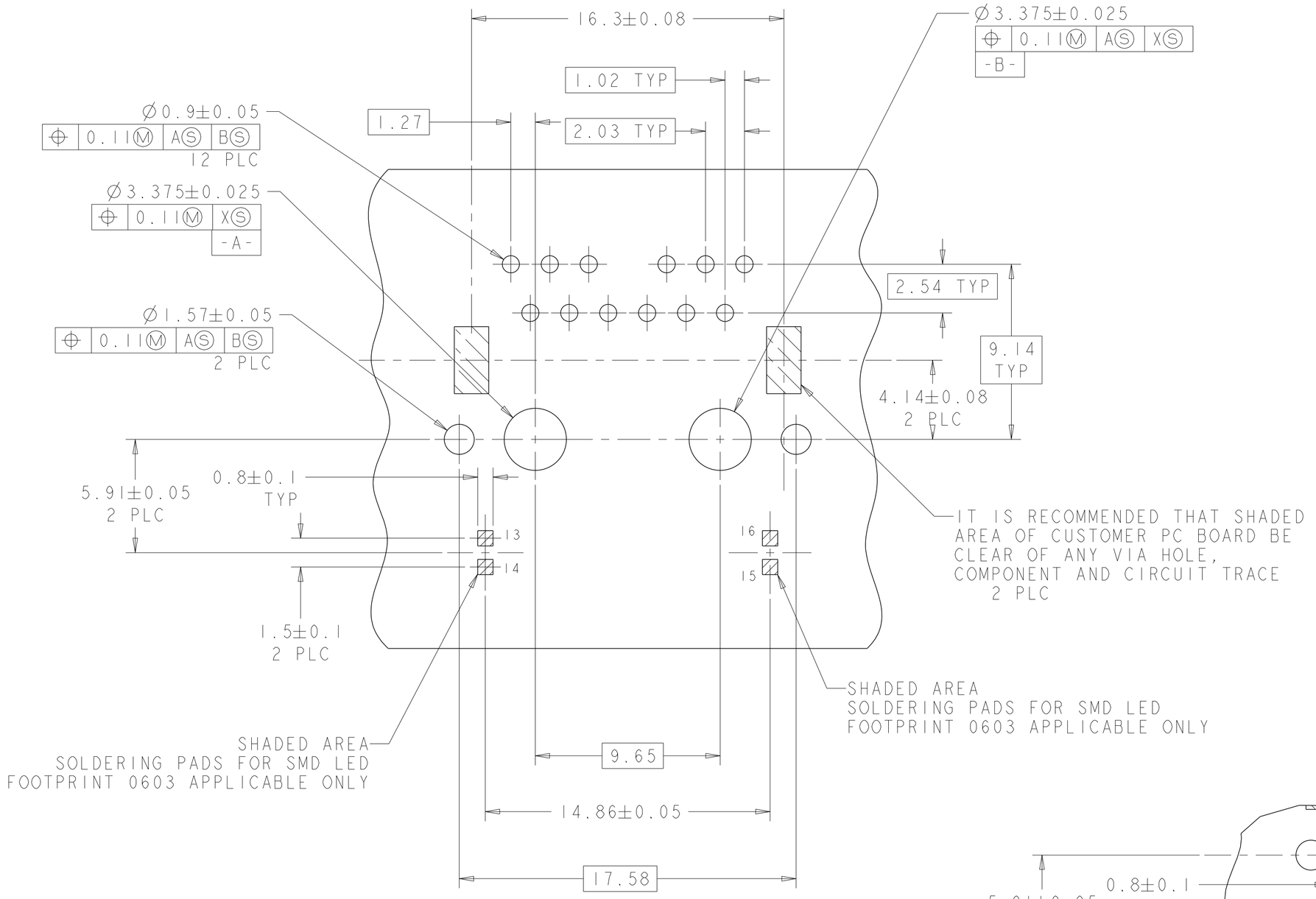


SUGGESTED PCB LAYOUT
FOR SINGLE COLOR LED
(COMPONENT SIDE)

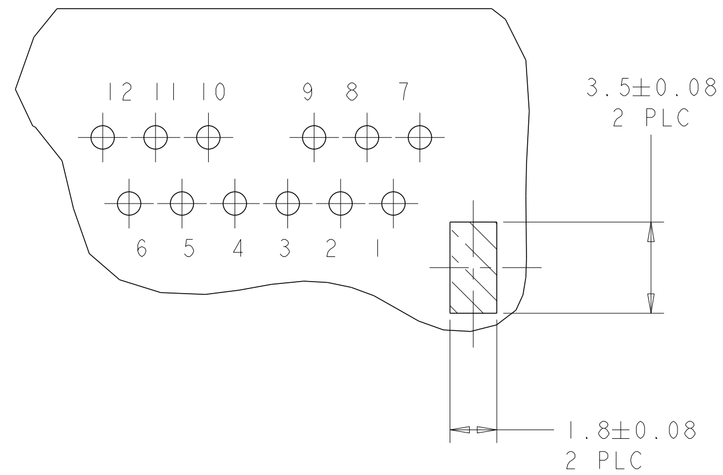


PIN DESIGNATIONS

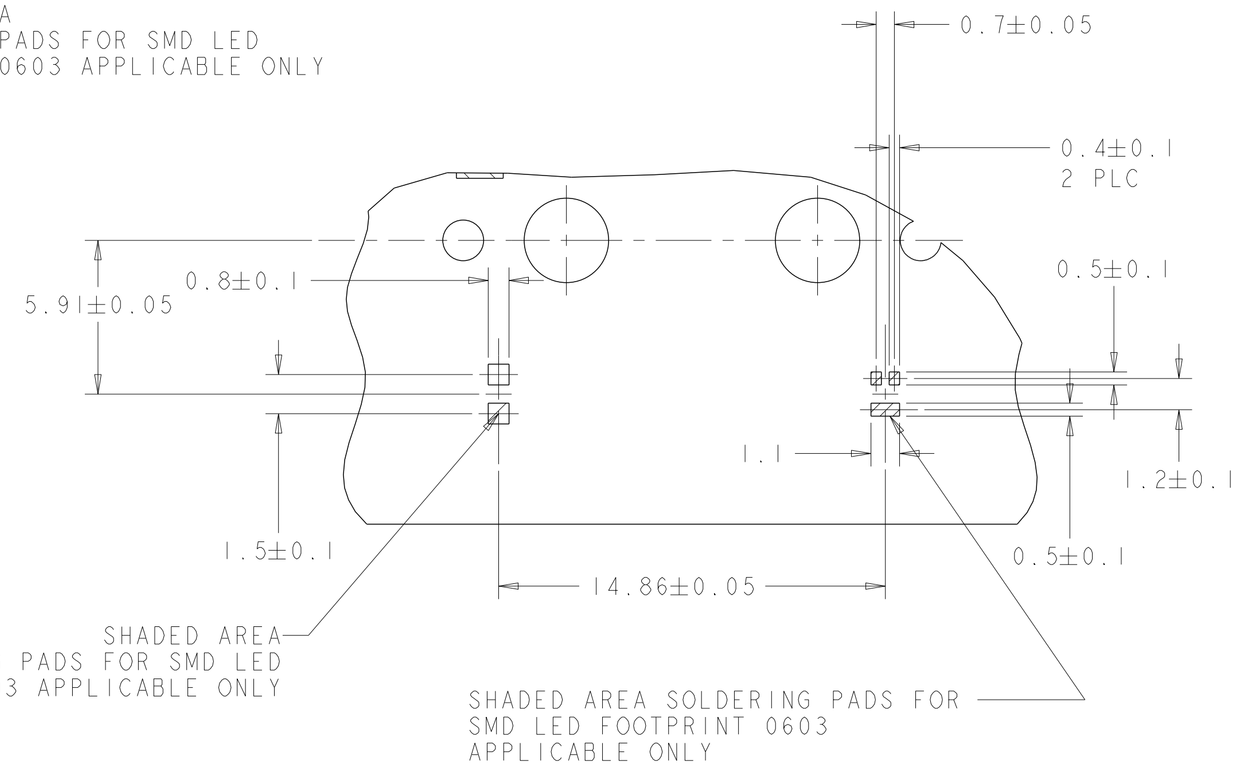


SUGGESTED PCB LAYOUT
FOR BI-COLOR LED
(COMPONENT SIDE)

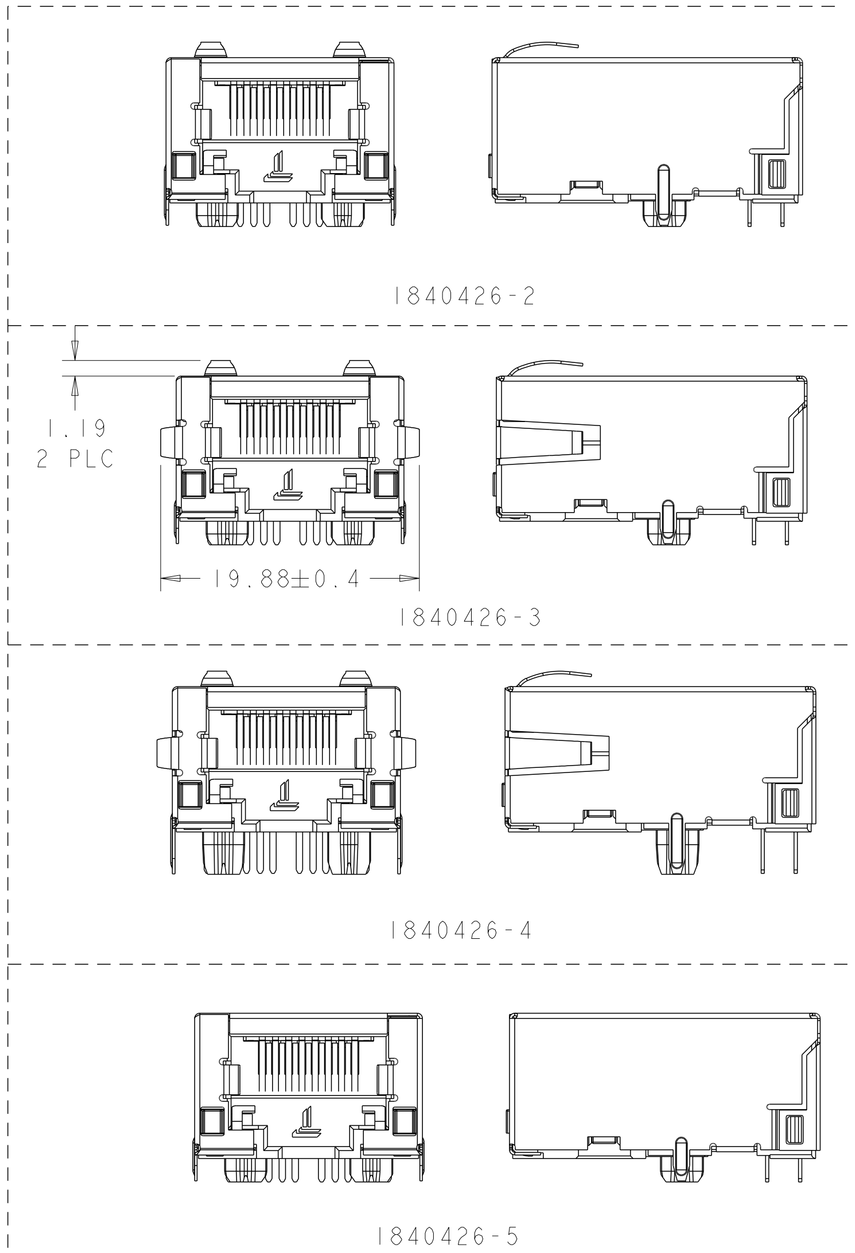


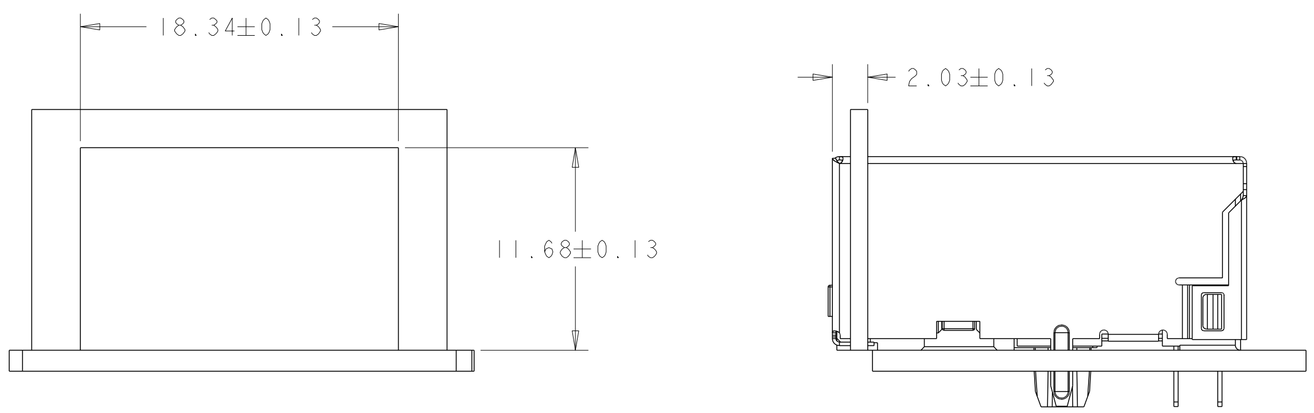


SUGGESTED PANEL OPENING

| | | | |
|---|---|---|---|
| THIS DRAWING IS A CONTROLLED DOCUMENT. | DWN TOWER YU 18JAN2007<br>CHK KEITH ZHU 18JAN2007<br>APVD TEDDY XIONG 18JAN2007 | trp CONNECTOR a bel group | DONGGUAN CHINA |
| DIMENSIONS: mm | TOLERANCES UNLESS OTHERWISE SPECIFIED: 0 PLC ±0.25, 1 PLC ±0.25, 2 PLC ±0.25, 3 PLC ±, 4 PLC ±, ANGLES ± | MODEL NAME: MAGJACK SINGLE NON-POE | DESC: 1X1 8G18 GIGABIT TAB DOWN LOW PROFILE NO LED W/ LIGHT PIPE |
| PRODUCT SPEC: 108-2207 | APPLICATION SPEC: - | SIZE A1 / CAGE CODE / DRAWING NO C-1840426 | RESTRICTED TO - |
| | | CUSTOMER DRAWING | SCALE 1:1 / SHEET 2 OF 2 / REV D |