REVISIONS					
REV	ECO	DESCRIPTION	DATE	BY	APPR
A3	-	RELEASE NEW DWG FORMAT	21/OCT/13	DRP	-
A4	C1070S	UPDATE DRAWING	28/JUN/19	JOE	TOMMY

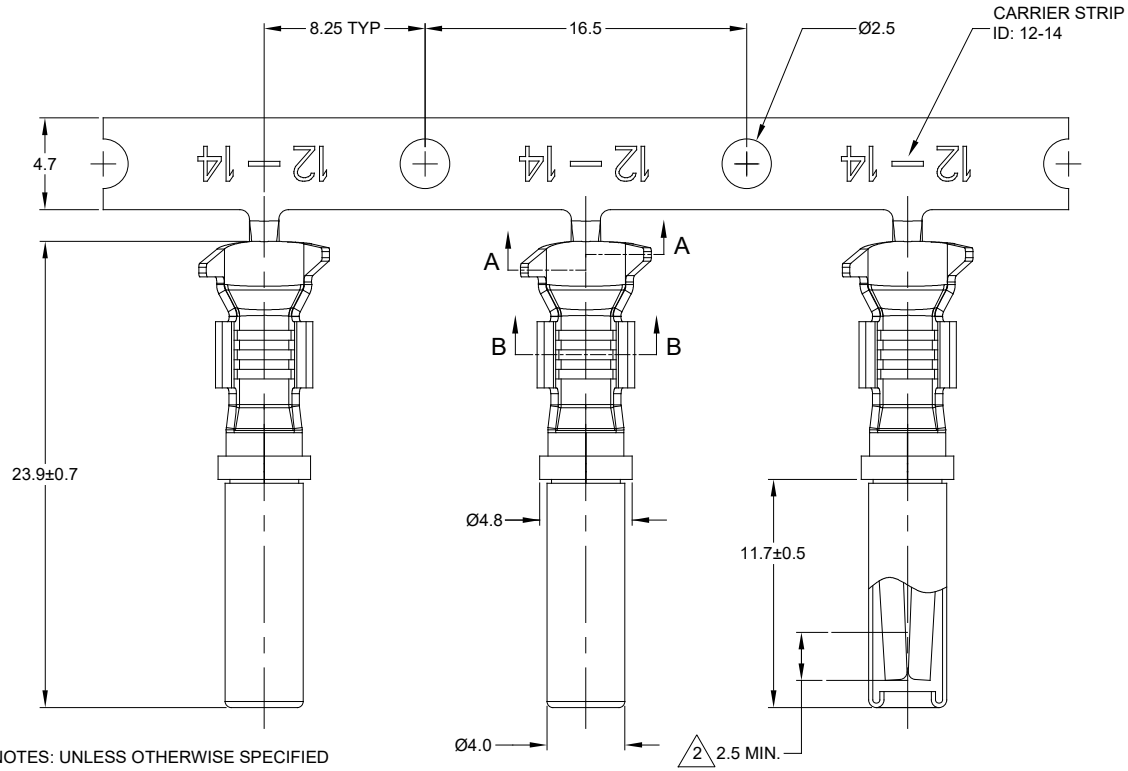

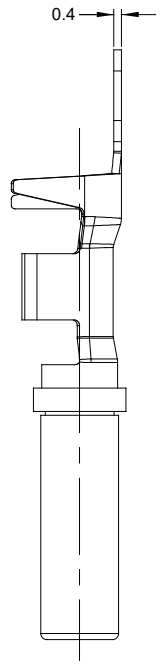

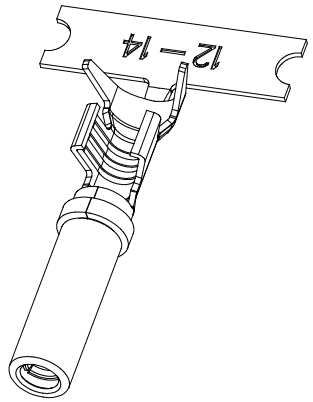

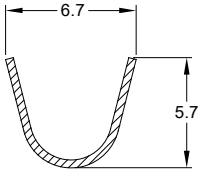

SECTION A-A

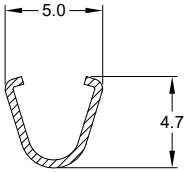

SECTION B-B

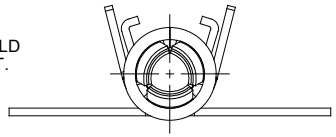

NOTES: UNLESS OTHERWISE SPECIFIED

1. MATERIAL: COPPER ALLOY

2. PLATING: SEE PART NUMBER CHART
   *FOR GOLD PLATED CONTACTS: SELECTIVE GOLD FLASH IN CONTACT ZONE OR ENTIRE CONTACT.

3. CONTACT SIZE: 12

4. SPECIFICATIONS:
   4.1 CURRENT RATING: 25 AMPS
   4.2 CONTACT MILLIVOLT DROP: 100 MILLIVOLT DROP @ 25 AMP TEST CURRENT.
   4.3 RoHS COMPLIANT

5. RECOMMENDED WIRE RANGE: 12 - 14 AWG

6. PACKAGE: 2000 PCS/REEL

7. AVAILABLE APPLICATORS: MFX-3973-K OR MFX-3973-G

8. ALL DIMENSIONS ARE FOR REFERENCE USE ONLY

PART NUMBER CHART	
PLATING	PART NUMBER
NICKEL	AT62-12-0166
GOLD	AT62-12-0144

QUANTITY	PART NUMBER	DESCRIPTION	ITEM
	SEE PART NUMBER CHART	REF: 1062-12-0144, 1062-12-0166	

MATERIALS LIST

UNLESS OTHERWISE SPECIFIED
1) All dimensions are in metric(mm).
2) Tolerances are as follows:
1 PL DEC ±0.30 | Fractions ±1/64
2 PL DEC ±0.15 | Angles ±1°
3 PL DEC ±0.08
3) Note reference = X

MATERIAL SPECIFICATIONS:

PROCESS SPECIFICATIONS:

NEXT ASSY:

SIGNATURES		DATE
DRAWN:	JOE.SONG	28/JUN/19
CHECKED:	ORION.LI	28/JUN/19
ENGINEER:		
APPROVAL:	TOMMY.XIE	28/JUN/19
CUSTOMER:		

THIS DRAWING IS SUPPLIED FOR INFORMATION ONLY. DESIGN FEATURES, SPECIFICATIONS AND PERFORMANCE DATA SHOWN HEREON ARE THE PROPERTY OF THE AMPHENOL CORPORATION. NO RIGHTS OF REPRODUCTION ARE IMPLIED. ALL DIMENSIONS ARE SUBJECT TO NORMAL MANUFACTURING VARIATIONS.

Amphenol

Sine Systems - www.amphenol-sine.com
44724 Morley Drive
Clinton Township, MI 48036

CONTACT, SOCKET, STAMPED, SIZE 12, 12-14 AWG, A SERIES

SIZE	TYPE	DWG NO:	REVISION
B	C-	AT62-12-01XX	A4

SCALE: NONE SHEET 1 OF 1

TITLE: CONTACT, STAMPED, SIZE 12, 12-14 AWG, A SERIES
DWG NO: AT62-12-01XX
REV: A4
SH: 1
OF: 1

Downloaded from Arrow.com.