Ordering Information[1]

Part Number	Package Type	Operating Range	Package Marking	Lead Finish
SY89467UHY	T64-1	Industrial	SY89467UHY with Pb-Free bar-line Indicator	Matte-Sn Pb-Free
SY89467UHYTR[2]	T64-1	Industrial	SY89467UHY with Pb-Free bar-line Indicator	Matte-Sn Pb-Free

Notes:

1. Contact factory for die availability. Dice are guaranteed at T_A = 25°C, DC Electricals Only.
2. Tape and Reel.

Pin Configuration

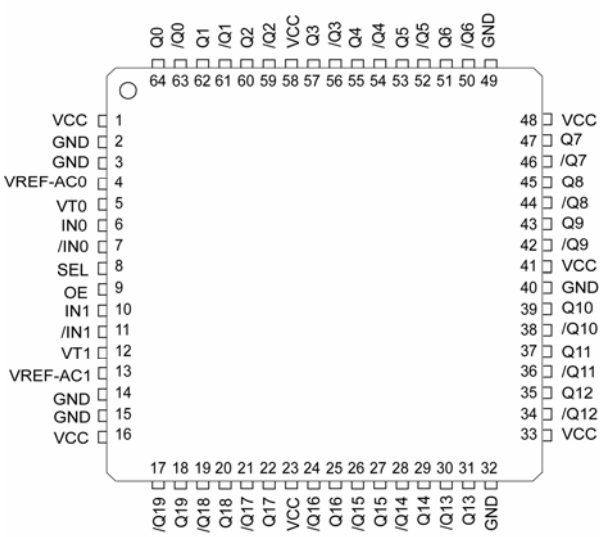

64-Pin EPAD-TQFP (T64-1)

Downloaded from Arrow.com.

Pin Description

Pin Number	Pin Name	Pin Function
1, 16, 23, 33 41, 48, 58	VCC	Positive Power Supply: Bypass with 0.1µF||0.01µF low ESR capacitors as close to the V_{CC} pins as possible.
64, 63 62, 61 60, 59 57, 56 55, 54 53, 52 51, 50 47, 46 45, 44 43, 42 39, 38 37, 36 35, 34 31, 30 29, 28 27, 26 25, 24 22, 21 20, 19 18, 17	Q0, /Q0 Q1, /Q1 Q2, /Q2 Q3, /Q3 Q4, /Q4 Q5, /Q5 Q6, /Q6 Q7, /Q7 Q8, /Q8 Q9, /Q9 Q10, /Q10 Q11, /Q11 Q12, /Q12 Q13, /Q13 Q14, /Q14 Q15, /Q15 Q16, /Q16 Q17, /Q17 Q18, /Q18 Q19, /Q19	LVPECL Differential Output Pairs: Differential buffered output copies of the selected input signal. The output swing is typically 800mV. Unused output pairs may be left floating with no impact on jitter. See “LVPECL Output Termination” subsection. Normally terminated with 50Ω to V_{CC}-2V. These differential LVPECL outputs are a logic function of the IN0, IN1, and SEL inputs. See “Truth Table” below.
4, 13	VREF-AC0 VREF-AC1	Reference Voltage: These outputs bias to V_{CC}–1.2V. They are used for AC-coupling inputs IN and /IN. Connect VREF-AC directly to the corresponding VT pin. Bypass with 0.01µF low ESR capacitor to V_{CC}. Due to limited drive capability, each VREF-AC pin is only intended to drive its respective VT pin. Maximum sink/source current is ±0.5mA. See “Input Interface Applications” subsection.
5, 12	VT0, VT1	Input Termination Center-Tap: Each side of a differential input pair terminates to the VT pin. The VT pin provides a center-tap for each input (IN, /IN) to a termination network for maximum interface flexibility. See “Input Interface Applications” subsection.
6, 7 10, 11	IN0, /IN0 IN1, /IN1	Differential Inputs: These input pairs are the differential signal inputs to the device. These inputs accept AC- or DC-coupled signals as small as 100mV. The input pairs internally terminate to a VT pin through 50Ω. This allows a wide input voltage range from VCC to GND. See Figure 3a, Simplified Differential Input Stage for details. Note that when these inputs are left in an open state, the FSI feature will override this input state and provide a valid state at the output. See “Functional Description” subsection.
2, 3, 14, 15, 32, 40, 49	GND, Exposed Pad	Ground. Exposed pad must be connected to a ground plane that is the same potential as the ground pins.
9	OE	Single-Ended Input: This TTL/CMOS input disables and enables the Q0-Q19 outputs. It is internally connected to a 25kΩ pull-up resistor and will default to a logic HIGH state if left open. When disabled, Q goes LOW and /Q goes HIGH. OE being synchronous, outputs will be enabled/disabled following a rising and a falling edge of the input clock. $V_{TH} = V_{CC}/2$.
8	SEL	Single-Ended Input: This single-ended TTL/CMOS-compatible input selects the inputs to the multiplexer. Note that this input is internally connected to a 25kΩ pull-up resistor and will default to logic HIGH state if left open. $V_{TH} = V_{CC}/2$.

Truth Table

Inputs					Outputs	
IN0	**/IN0**	**IN1**	**/IN1**	**SEL**	**Q**	**/Q**
0	1	X	X	0	0	1
1	0	X	X	0	1	0
X	X	0	1	1	0	1
X	X	1	0	1	1	0

Downloaded from Arrow.com.

Absolute Maximum Ratings[1]

Supply Voltage (V_{CC}) .....–0.5V to +4.0V
Input Voltage (V_{IN}) .....–0.5V to V_{CC}
LVPECL Output Current (I_{OUT}).....
Continuous 50mA
Surge..... 100mA
Current (V_T)
Source or sink on VT pin..... ±100mA
Input Current
Source or sink current on (IN, /IN) ..... ±50mA
Current (V_{REF})
Source/Sink Current on V_{REF-AC}[4] ..... ±0.5mA
Maximum Operating Junction Temperature .....125°C
Lead Temperature (soldering, 20 sec.) .....+260°C
Storage Temperature (T_s).....–65°C to 150°C

Operating Ratings[2]

Supply Voltage (V_{CC})..... +2.375V to +2.625V
.....+3.0V to +3.6V
Ambient Temperature (T_A)……-40°C to +85°C
Package Thermal Resistance[3]
TQFP (θ_{JA})
Still-Air ..... 35°C/W
TQFP (ψ_{JB})
Junction-to-Board ..... 21°C/W

DC Electrical Characteristics[5]

T_A = –40°C to +85°C, unless otherwise stated.

Symbol	Parameter	Condition	Min	Typ	Max	Units
V_{CC}	Power Supply		2.375 3.0	2.5 3.3	2.625 3.6	V V
I_{CC}	Power Supply Current	No load, max V_{CC}		120	165	mA
R_{IN}	Input Resistance (IN-to-V_T)		45	50	55	Ω
R_{DIFF_IN}	Differential Input Resistance (IN-to-/IN)		90	100	110	Ω
V_{IH}	Input High Voltage (IN, /IN)		0.1		V_{CC}	V
V_{IL}	Input Low Voltage (IN, /IN)		0		V_{IH}–0.1	V
V_{IN}	Input Voltage Swing (IN, /IN)	See Figure 2a. Note 6.	0.1		1.0	V
V_{DIFF_IN}	Differential Input Voltage Swing |IN-/IN|	See Figure 2b.	0.2			V
V_{IN_FSI}	Input Voltage Threshold that Triggers FSI			30	100	mV
V_{REF-AC}	Output Reference Voltage	$I_{VREF-AC}$ = ± 0.5mA	V_{CC}–1.3	V_{CC}–1.2	V_{CC}–1.1	V
V_{T_IN}	Voltage from Input to V_T				1.28	V

Notes:

1. Permanent device damage may occur if absolute maximum ratings are exceeded. This is a stress rating only and functional operation is not implied at conditions other than those detailed in the operational sections of this data sheet. Exposure to absolute maximum rating conditions for extended periods may affect device reliability.
2. The data sheet limits are not guaranteed if the device is operated beyond the operating ratings.
3. Package thermal resistance assumes exposed pad is soldered (or equivalent) to the devices most negative potential on the PCB. θ_{JA} and ψ_{JB} values are determined for a 4-layer board in still air unless otherwise stated.
4. Due to limited drive capability use for input of the same package only.
5. The circuit is designed to meet the DC specifications shown in the above table after thermal equilibrium has been established.
6. V_{IN} (max) is specified when V_T is floating.

Downloaded from Arrow.com.

LVPECL Outputs DC Electrical Characteristics[7]

V_{CC} = 2.5V ±5% or 3.3V ±10%; R_L = 50Ω to V_{CC}-2V; T_A = –40°C to + 85°C, unless otherwise stated.

Symbol	Parameter	Condition	Min	Typ	Max	Units
V_{OH}	Output HIGH Voltage	Q, /Q	V_{CC}-1.145		V_{CC}-0.895	V
V_{OL}	Output LOW Voltage	Q, /Q	V_{CC}-1.945		V_{CC}-1.695	
V_{OUT}	Output Voltage Swing	See Figure 2a.	550	800	950	mV
V_{DIFF_OUT}	Differential Output Voltage Swing	See Figure 2b.	1100	1600	1900	mV

LVTTL/CMOS DC Electrical Characteristics[7]

V_{CC} = 2.5V ±5% or 3.3V ±10%;T_A = –40°C to + 85°C, unless otherwise stated.

Symbol	Parameter	Condition	Min	Typ	Max	Units
V_{IH}	Input HIGH Voltage		2.0			V
V_{IL}	Input LOW Voltage				0.8	V
I_{IH}	Input HIGH Current		-125		30	µA
I_{IL}	Input LOW Current		-300			µA

Note:

7. The circuit is designed to meet the DC specifications shown in the above table after thermal equilibrium has been established.

Downloaded from Arrow.com.

AC Electrical Characteristics[8]

V_{CC} = 2.5V ±5% or 3.3V ±10%; R_L = 50Ω to V_{CC}-2V; Input $t_r/t_f \leq$ 300ps; T_A = –40°C to + 85°C, unless otherwise stated.

Symbol	Parameter	Condition	Min	Typ	Max	Units
f_{MAX}	Maximum Operating Frequency	$V_{OUT} \geq$ 200mV, $V_{IN} \geq$ 200mV	1.5	2.0		GHz
		$V_{OUT} \geq$ 200mV, $V_{IN} \geq$ 100mV	1.0	1.5		GHz
t_{pd}	Differential Propagation Delay					
	IN-to-Q	100mV < $V_{IN} \leq$ 200mV, Note 9	600	850	1200	ps
	IN-to-Q	200mV < $V_{IN} \leq$ 800mV, Note 9	500	750	1100	ps
	SEL-to-Q	V_{TH} = V_{CC}/2	350	600	850	ps
t_S OE	Set-up Time OE-to-IN	Note 10	300			ps
t_H OE	Hold Time IN-to-OE	Note 10	800			ps
t_{SKEW}	Output-to-Output Skew	Note 11		15	35	ps
	Input-to-Input Skew	Note 12		5	20	ps
	Part-to-Part Skew	Note 13			300	ps
t_{JITTER}	Clock					
	Random Jitter	Note 14			1	ps_{RMS}
	Cycle-to-Cycle Jitter	Note 15			1	ps_{RMS}
	Total Jitter	Note 16			10	ps_{PP}
	Crosstalk-Induced Jitter	Note 17			0.7	ps_{RMS}
t_r, t_f	Output Rise/Fall Time (20% to 80%)	At full output swing.	110	170	250	ps
	Duty Cycle	V_{IN} > 200mV	45		55	%
		100mV < $V_{IN} \leq$ 200mV	45		55	%

Notes:

8. High-frequency AC-parameters are guaranteed by design and characterization.
9. Propagation delay is measured with input t_r, $t_f \leq$ 300ps (20% to 80%). The propagation delay is a function of the rise and fall times at IN. See "Typical Operating Characteristics" for details.
10. Set-up and hold times apply to synchronous applications that intend to enable/disable before the next clock cycle. For asynchronous applications, set-up and hold do not apply.
11. Output-to-Output skew is measured between two different outputs under identical transitions.
12. Input-to-Input skew is the time difference between the two inputs to one output, under identical input transitions.
13. Part-to-Part skew is defined for two parts with identical power supply voltages at the same temperature and with no skew of the edges at the respective inputs.
14. Random Jitter is measured with a K28.7 character pattern, measured at <f_{MAX}.
15. Cycle-to-Cycle Jitter definition: the variation of periods between adjacent cycles, $T_n - T_{n-1}$ where T is the time between rising edges of the output signal.
16. Total Jitter definition: with an ideal clock input of frequency <f_{MAX}, no more than one output edge in 10^{12} output edges will deviate by more than the specified peak-to-peak jitter value.
17. Crosstalk is measured at the output while applying two similar differential clock frequencies that are asynchronous with respect to each other at the inputs.

Downloaded from Arrow.com.

Functional Description

Clock Select (SEL)

SEL is an asynchronous TTL/CMOS compatible input that selects one of the two input signals. An internal 25kΩ pull-up resistor defaults the input to logic HIGH if left open. Input switching threshold is $V_{CC}/2$. Refer to Figure 1a.

Fail-Safe Input (FSI)

The input includes a special failsafe circuit to sense the amplitude of the input signal and to latch the outputs when there is no input signal present, or when the amplitude of the input signal drops sufficiently below $100mV_{PK}$, typically $30mV_{PK}$. Maximum frequency of the SY89467U is limited by the FSI function. Refer to Figure 1b.

Input Clock Failure Case

If the input clock fails to a floating, static, or extremely low signal swing such that the voltage across the input pair is significantly less than 100mV, FSI function will eliminate a metastable condition and latch the outputs to the last valid state. No ringing and no undetermined state will occur at the output under these conditions. The output recovers to normal operation once the input signal returns to a valid state with a typical swing greater than 30mV.

Note that the FSI function will not prevent duty cycle distortion in case of a slowly deteriorating (but still toggling) input signal. Due to the FSI function, the propagation delay will depend on the rise and fall time of the input signal and on its amplitude.

Output Enable (OE)

OE is a synchronous TTL/CMOS compatible input that enables/disables the outputs based upon the input to this pin. The enable function is synchronous so that the clock outputs will be enabled or disabled following a rising and a falling edge of the input clock. Refer to Figure 1c. Internal 25kΩ pull-up resistor defaults the input to logic HIGH if left open. Input switching threshold is $V_{CC}/2$.

Downloaded from Arrow.com.

Timing Diagrams

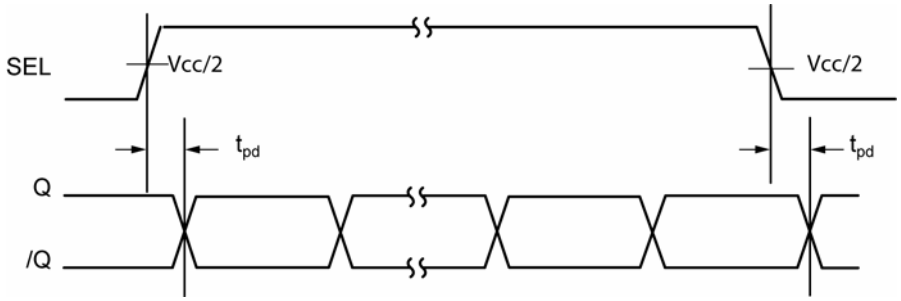

Figure 1a. SEL-to-Q Delay

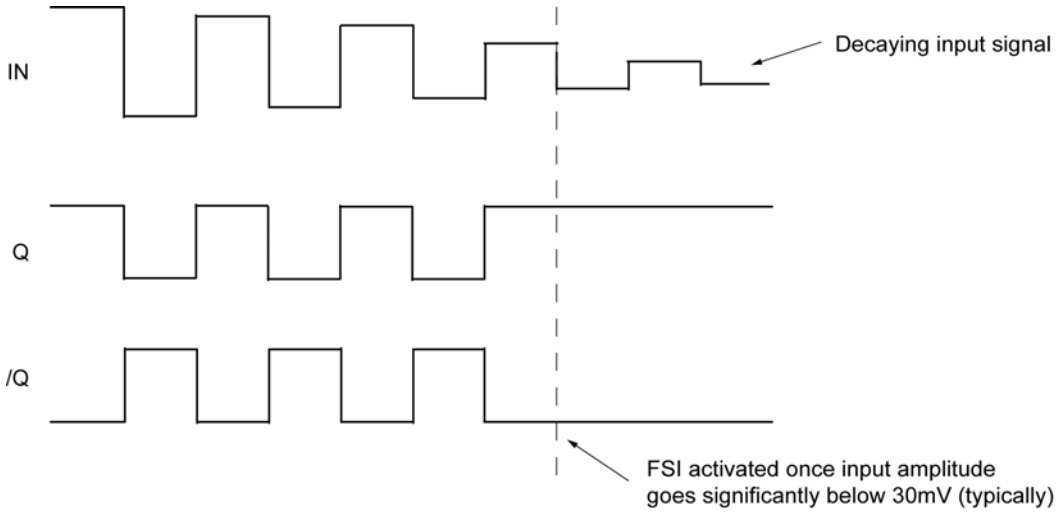

Figure 1b. Fail-Safe Feature

Downloaded from Arrow.com.

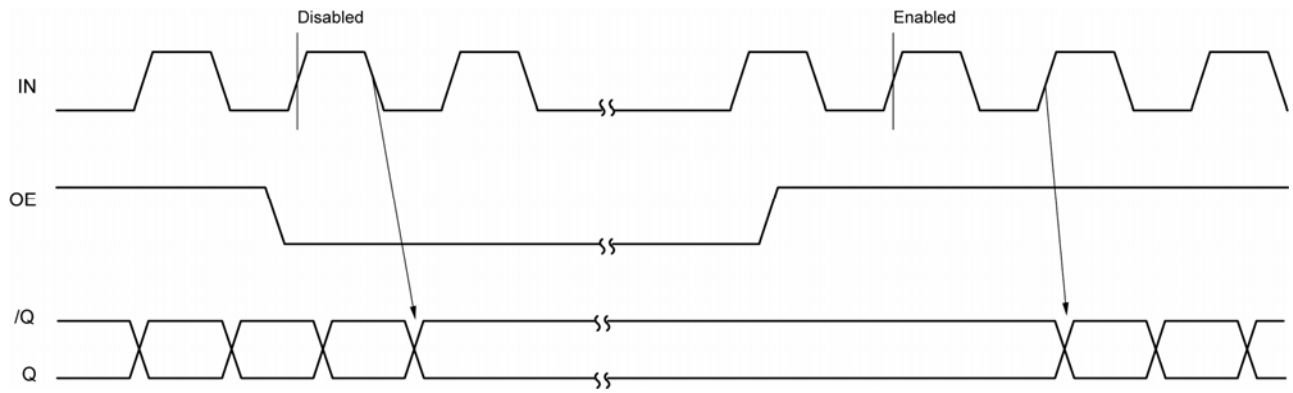

Figure 1c. Enable Output Timing Diagram

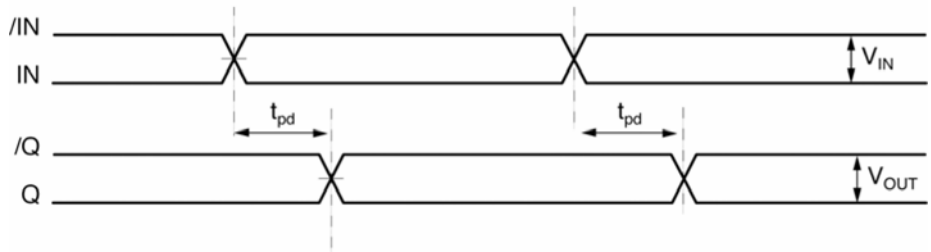

Figure 1d. Propagation Delay

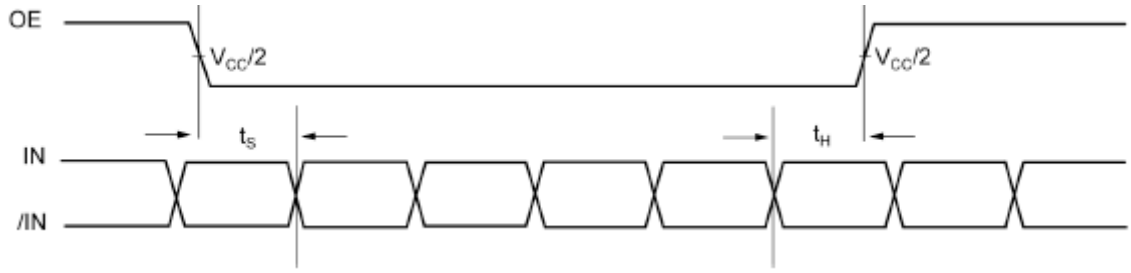

Figure 1e. Setup and Hold Time

Downloaded from Arrow.com.

Typical Operating Characteristics

V_{CC} = 3.3V, GND = 0V, V_{IN} = 200mV, R_L = 50Ω to V_{CC}–2V; T_A = 25°C, unless otherwise stated.

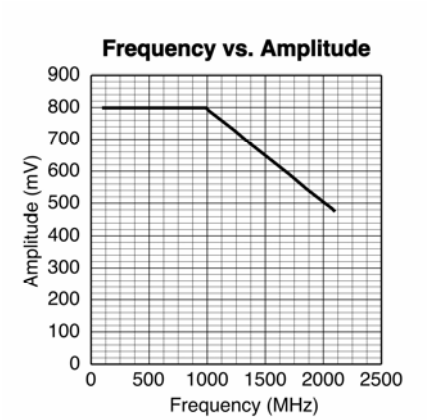

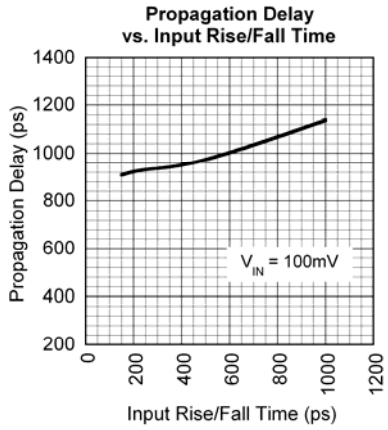

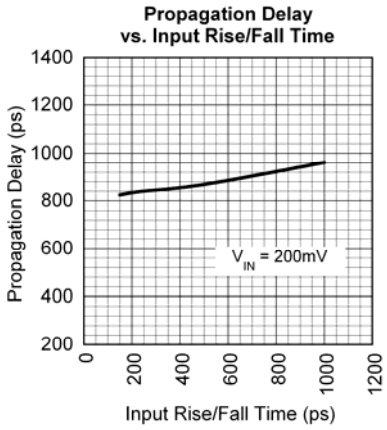

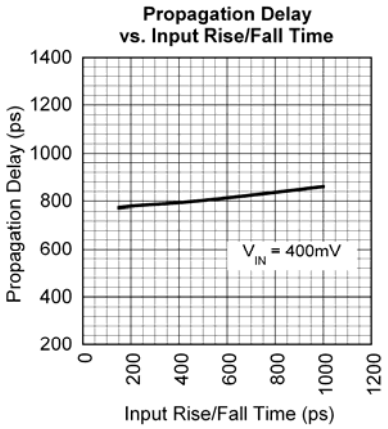

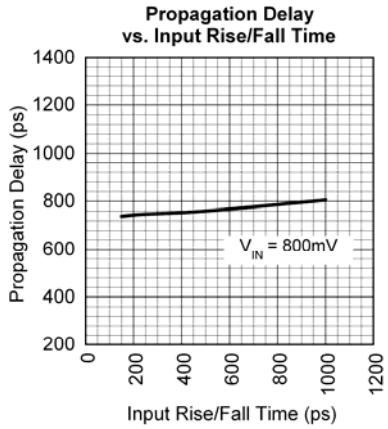

Downloaded from Arrow.com.

Functional Characteristics

V_{CC} = 3.3V, GND = 0V, V_{IN} = 100mV, R_L = 50Ω to V_{CC}-2V; T_A = 25°C, unless otherwise stated.

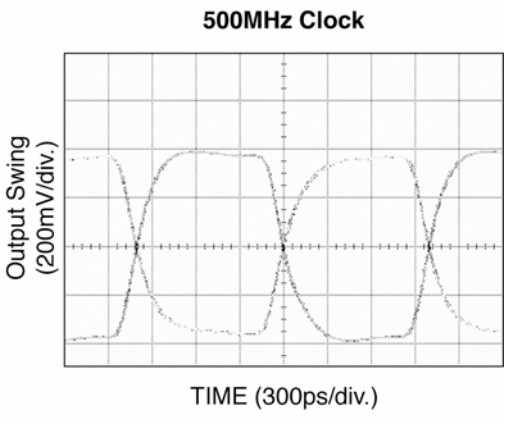

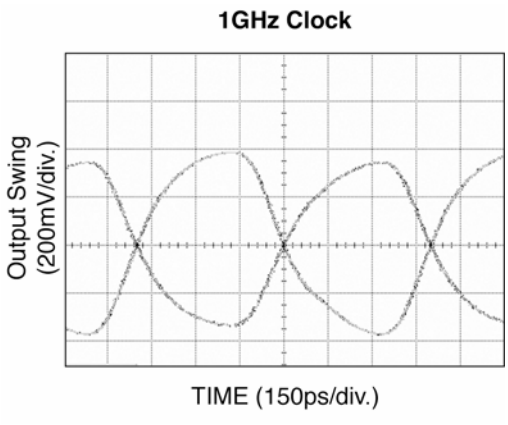

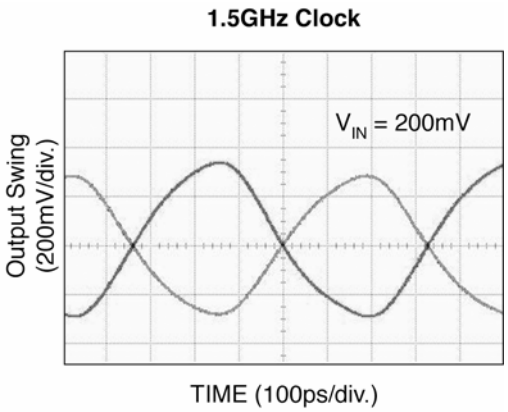

Downloaded from Arrow.com.

Single-Ended and Differential Swings

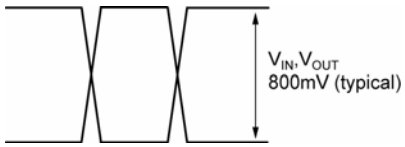

Figure 2a. Single-Ended Voltage Swing

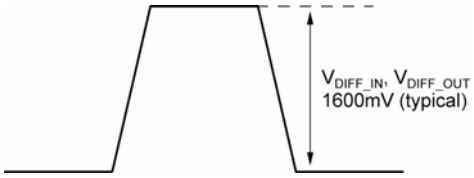

Figure 2b. Differential Voltage Swing

Input and Output Stages

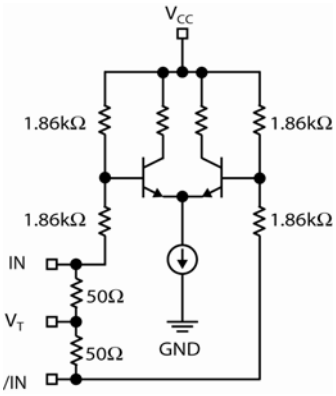

Figure 3a. Simplified Differential Input Stage

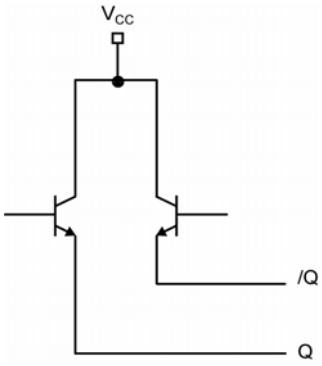

Figure 3b. Simplified Differential Output Stage

Downloaded from Arrow.com.

Input Interface Applications

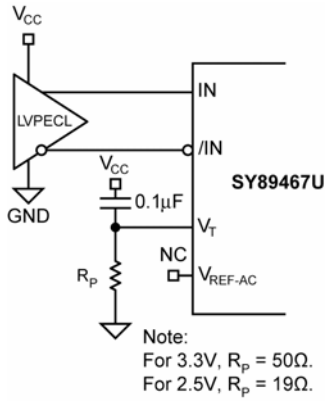

Figure 4a. LVPECL Interface (DC-Coupled)

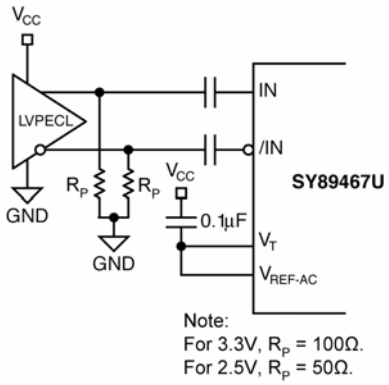

Figure 4b. LVPECL Interface (AC-Coupled)

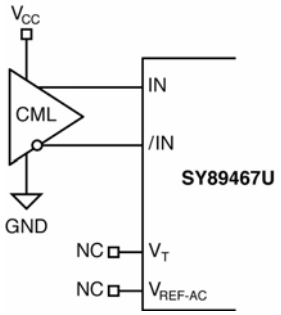

Option: may connect V_T to V_{CC}

Figure 4c. CML Interface (DC-Coupled)

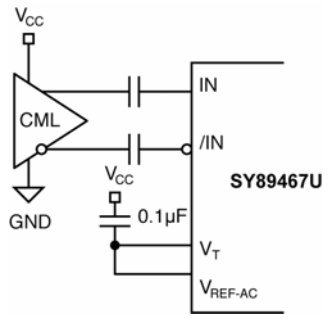

Figure 4d. CML Interface (AC-Coupled)

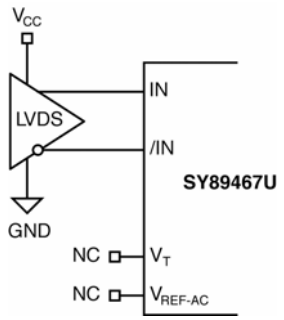

Figure 4e. LVDS Interface (DC-Coupled)

Downloaded from Arrow.com.

PECL Output Interface Applications

PECL has a high input impedance, a very low output impedance (open emitter), and a small signal swing which results in low EMI. PECL is ideal for driving 50ohm and 100ohm-controlled impedance transmission lines. There are several techniques for terminating the PECL output: parallel termination-thevenin equivalent, parallel termination (3-resistor), and AC-coupled termination. Unused output pairs may be left floating. However, single-ended outputs must be terminated or balanced.

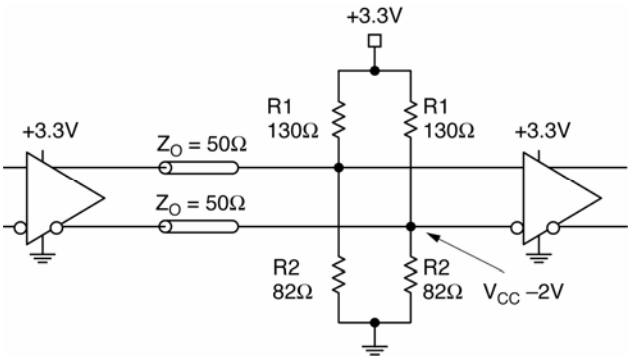

Figure 5a. Parallel Termination-Thevenin Equivalent

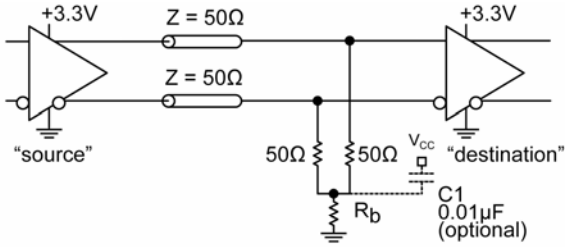

Notes:
1. Power-saving alternative to Thevenin termination.
2. Place termination resistors as close to destination inputs as possible.
3. Rb resistor sets the DC bias voltage.
4. For 2.5V systems, R_b = 19Ω. For 3.3V systems, R_b = 50Ω.

Figure 5b. Parallel Termination (3-Resistor)

Related Product and Support Documentation

Part Number	Function	Data Sheet Link
SY89468U	Precision LVDS 1:20 Fanout MUX with 2:1 MUX and internal termination with Fail Safe Input	http://www.micrel.com/_PDF/HBW/sy89467u.pdf#page=2
	MLF® Application Note	www.amkor.com/products/notes_papers/MLFAppNote.pdf
HBW Solutions	New Products and Applications	www.micrel.com/product-info/products/solutions.shtml

Downloaded from Arrow.com.

Package Information

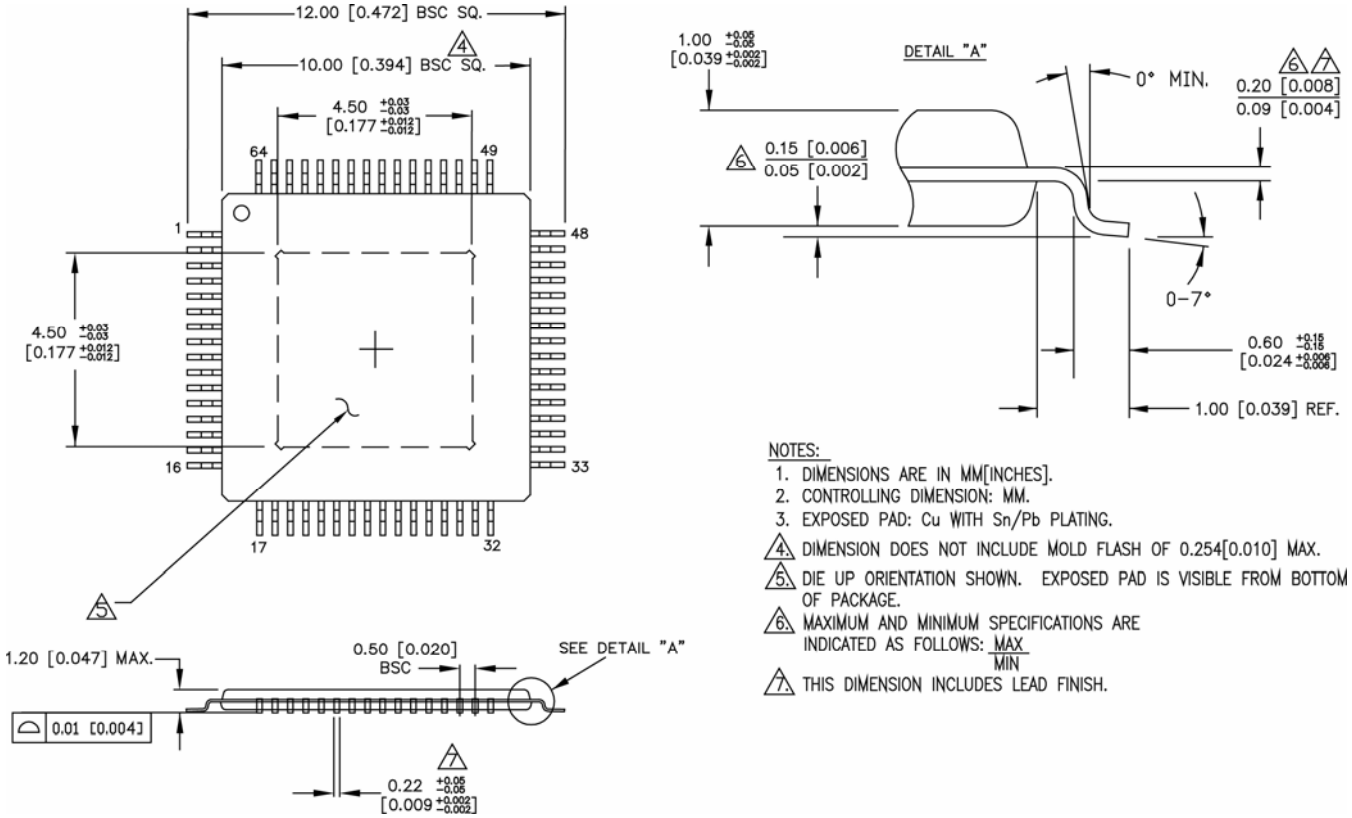

64-Pin EPAD-TQFP (T64-1)

Packages Notes:

1. Package meets Level 2 Moisture Sensitivity Classification.
2. All parts are dry-packed before shipment.
3. Exposed pad must be soldered to a ground for proper thermal management.

MICREL, INC. 2180 FORTUNE DRIVE SAN JOSE, CA 95131 USA
TEL +1 (408) 944-0800 FAX +1 (408) 474-1000 WEB http:/www.micrel.com

The information furnished by Micrel in this data sheet is believed to be accurate and reliable. However, no responsibility is assumed by Micrel for its use. Micrel reserves the right to change circuitry and specifications at any time without notification to the customer.

Micrel Products are not designed or authorized for use as components in life support appliances, devices or systems where malfunction of a product can reasonably be expected to result in personal injury. Life support devices or systems are devices or systems that (a) are intended for surgical implant into the body or (b) support or sustain life, and whose failure to perform can be reasonably expected to result in a significant injury to the user. A Purchaser's use or sale of Micrel Products for use in life support appliances, devices or systems is a Purchaser's own risk and Purchaser agrees to fully indemnify Micrel for any damages resulting from such use or sale.

© 2007 Micrel, Inc.

Downloaded from Arrow.com.