Downloaded from Arrow.com.

REV.	DATE	DESCRIPTION
A	02/12/98	ADD LEG LENGTH TO TITLE
B	07/16/07	UPDATE DRAWING FORMAT

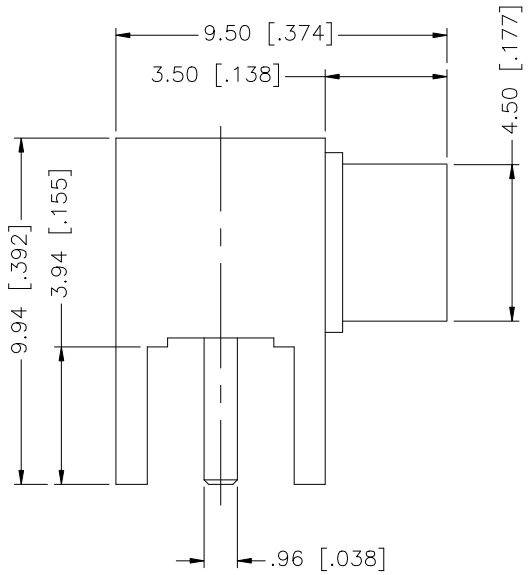

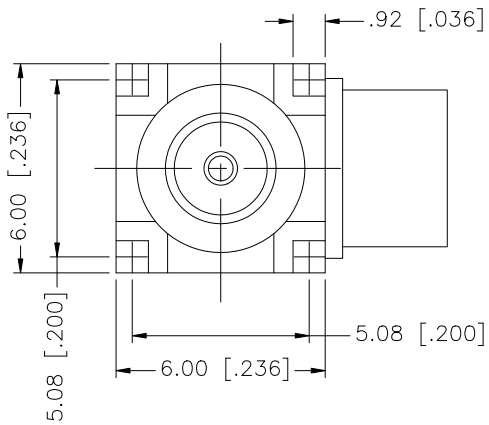

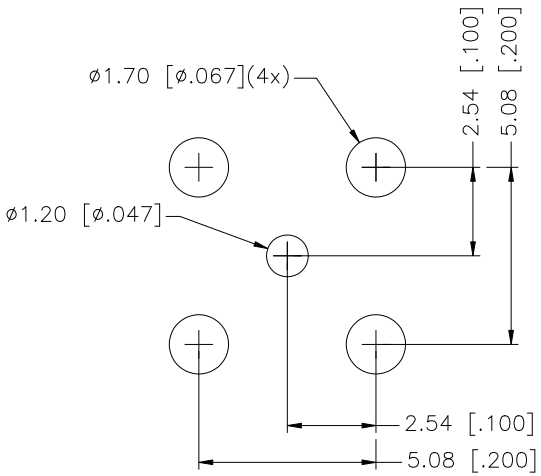

PCB MOUNTING HOLES

	DESCRIPTION	MATERIAL	FINISH	QTY
8				
7				
6				
5				
4				
3	CONTACT PIN	BER. COPPER	GOLD	1
2	INSULATOR	TEFLON	NATURAL	1
1	BODY	BRASS	GOLD	1

UNLESS OTHERWISE SPECIFIED DIMENSIONS ARE IN MILLIMETERS. DIMENSIONS IN [ ] ARE IN INCHES AND FOR CUSTOMER REFERANCE ONLY.

UNLESS OTHERWISE SPECIFIED TOLERANCES FOR MILLIMETERS ARE:
0.5 – 8mm ± 0.20mm
8 – 30mm ± 0.40mm
30 – 120mm ± 0.50mm

UNLESS OTHERWISE SPECIFIED TOLERANCES FOR INCHES ARE:
.020 – .315 = ± 0.007"
.315 – 1.180 = ± 0.015"
1.180 – 4.724 = ± 0.020"

DO NOT SCALE DRAWING

APPROVALS		DATE
DRAWN	G.R.S.	07/16/07
CHECKED		
ISSUED		
SHEET	1 OF 1	

CAD FILE C:/252/252129.DWG

Amphenol Connex

PART DESCRIPTION
MCX R/A P.C. BOARD RECEPTACLE
(3.94 LEGS – GOLD)

PART NO. 252129

DWG. NO.	REV.	SIZE	SCALE
252129.DWG	B	A	NA