SSP-T7-F

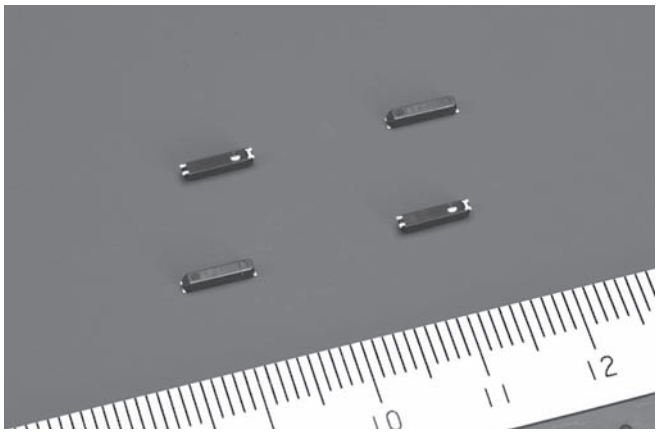

FEATURES

- Ultra thin type with height 1.4mm max.
- SMD type suitable for automatic & high density surface mounting.
- Plastic mold package containing highly reliable tubular type quartz crystal.
- Excellent shock and heat resistance.
- RoHS directive compliant.

APPLICATIONS

Cellular Phones, PDA, DSC, Car Audio, GPS Module, FM Tuner Module, ZigBee, Glucose Meter, Payment Terminal, Clock Source for Micro-Computers, Portable Applications etc.

STANDARD SPECIFICATIONS

Conditions without notice (Temperature: +25±2°C, DL: 0.1μW)

Item	Symbol	Specifications	Conditions / Notes
Nominal Frequency	f_nom	32.768kHz	
Frequency Tolerance	f_tol	±20 x 10^{-6}, ±50 x 10^{-6}	
Turnover Temperature	Ti	+25±5°C	
Parabolic Coefficient	B	(−3.5±1.0) x 10^{-8}/°C^2	
Load Capacitance	C_L	7.0 pF / 12.5pF	
Motional Resistance (ESR)	R_1	65kΩ max.	
Absolute Maximum Drive Level	DLmax	1μW	
Level of Drive	DL	0.1μW	
Shunt Capacitance	C_0	0.8pF typ.	
Frequency Ageing	f_age	±3 x 10^{-6}	+25±3°C, First Year
Operating Temperature	T_use	−40°C to +85°C	
Storage Temperature	T_stg	−55°C to +125°C	Piece part basis

DIMENSIONS

SSP-T7-FL / SSP-T7-F

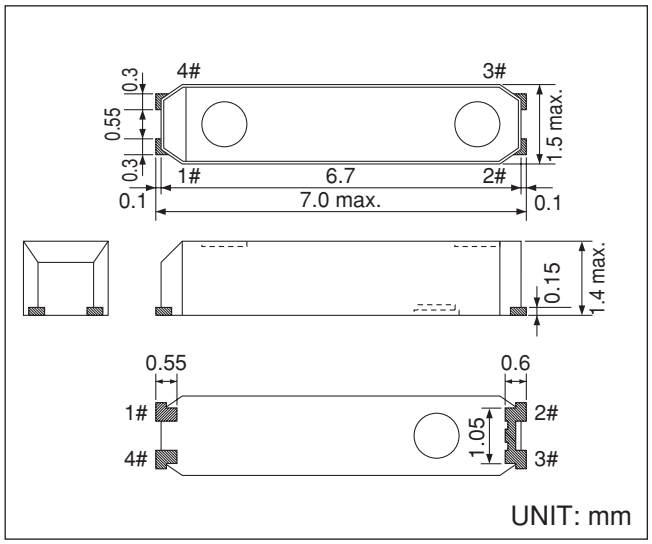

INTERNAL LEAD CONNECTION

SSP-T7-FL / SSP-T7-F

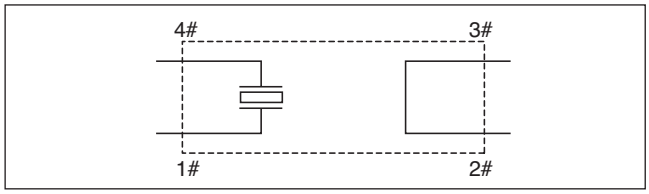

RECOMMENDED SOLDERING PATTERN

SSP-T7-FL / SSP-T7-F

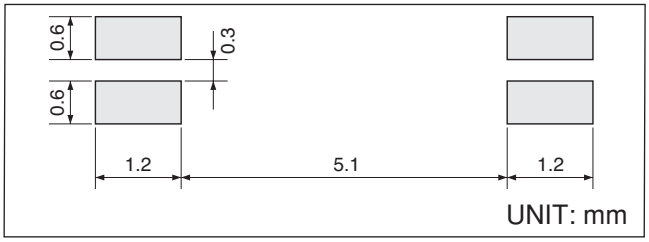

Remarks 1. Do not connect #2 and #3 to external device and GND.
2. The part of the cylinder inside resin mold may be sometimes exposed, however, it does not affect the characteristics of crystal unit.
3. Please make sure that there is no pattern under SSP-T7-F on the circuit board.

Downloaded from Arrow.com.