THIS DRAWING IS UNPUBLISHED. RELEASED FOR PUBLICATION -,- .
© COPYRIGHT - By - ALL RIGHTS RESERVED.

LOC	DIST
ES	00

REVISIONS

P	LTR	DESCRIPTION	DATE	DWN	APVD
	C2	REVISED PER ECO-11-005033	24MAR11	RK	HMR

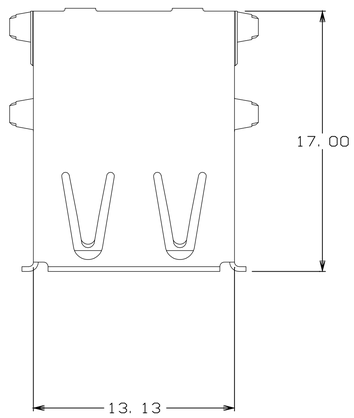

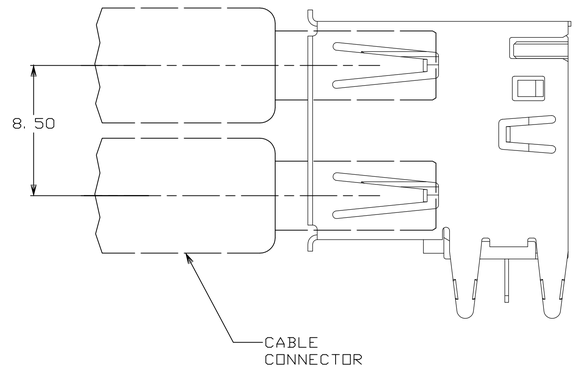

1. MATERIAL:
   SHELL & CONTACTS- COPPER ALLOY.
   HOUSING- UL 94V-0 RATED, THERMOPLASTIC, SEE TABLE.
2. PLATING:
   CONTACTS- 0.076um MINIMUM GOLD OVER 0.76um MINIMUM PALLADIUM-NICKEL ON MATING AREA. OR CONTACT ALTRENATE PLATING 0.76um MINIMUM GOLD ON MATING AREA.
   3.80um MINIMUM MATTE TIN ON SOLDER TAILS.
   BOTH OVER 1.27um MINIMUM NICKEL.
   SHELL: 2~5um MINIMUM BRIGHT TIN
3. DATUM AND BASIC DIMENSIONS ESTABLISHED BY CUSTOMER.
4. RECOMMENDED PC BOARD THICKNESS OF 1.57.
5. PLATING:
   CONTACTS- 0.127um MINIMUM GOLD ON MATING AREA,
   3.80um MINIMUM MATTE TIN ON SOLDER TAILS.
   ALL OVER .76um MINIMUM NICKEL ON ENTIRE CONTACT.
   SHELL: 2~5um MINIMUM BRIGHT TIN
6. PACKAGED IN TRAYS
7. OBSOLETE PARTS: OBSOLETE CIS STREAMLINING PER D.RENAUD/D.SINISI

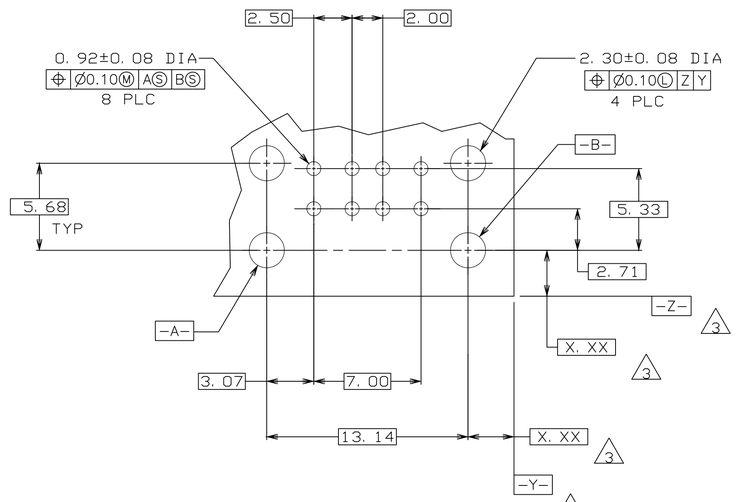

RECOMMENDED PC BOARD MOUNTING DIMENSIONS

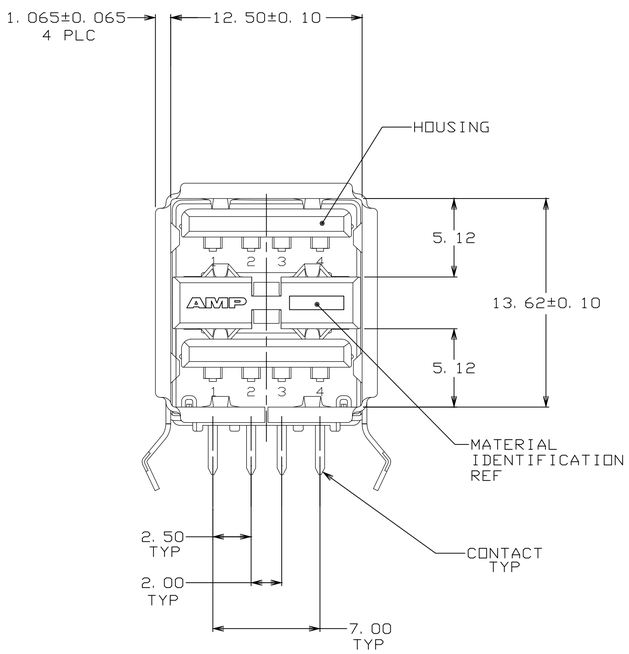

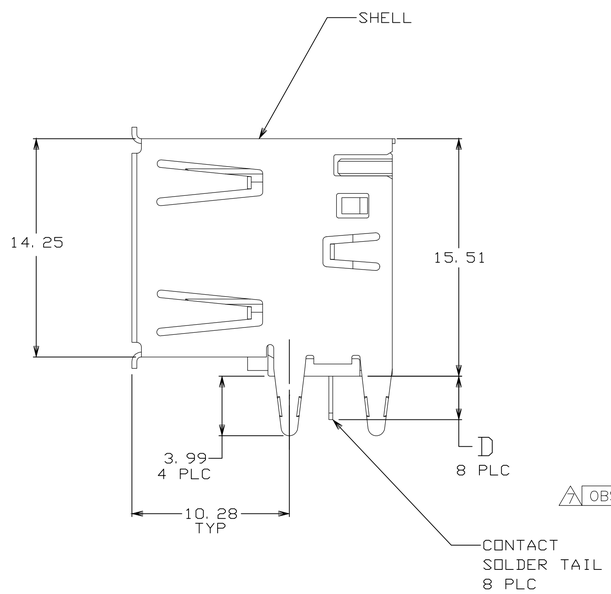

OBSOLETE	6	2	NO	3.24±0.25	BLACK	5787617-8
	6	5	NO	2.84±0.25	BLACK	~~5787617-7~~
	6	2	YES	2.84±0.25	NATURAL	5787617-6
	6	2	YES	2.29±0.25	BLACK	5787617-5
	6	2	YES	2.84±0.25	BLACK	5787617-4
	6	2	NO	2.84±0.25	NATURAL	5787617-3
	6	2	NO	2.29±0.25	BLACK	5787617-2
	6	2	NO	2.84±0.25	BLACK	5787617-1
	PACKAGING	PLATING	HIGH TEMPERATURE COMPATIBLE	D	HOUSING COLOR	PART NUMBER

THIS DRAWING IS A CONTROLLED DOCUMENT.

DIMENSIONS: mm

TOLERANCES UNLESS OTHERWISE SPECIFIED:
0 PLC ± –
1 PLC ± –
2 PLC ± 0.13
3 PLC ± –
4 PLC ± –
ANGLES ± –

MATERIAL 1

FINISH SEE CHART

DWN J.JIANG 12APR2004
CHK S.YAO 12APR04
APVD J.QU 12APR04
PRODUCT SPEC —
APPLICATION SPEC —
WEIGHT —

TE Connectivity

NAME RECEPTACLE ASSEMBLY, RIGHT ANGLE, STACKED, THRU-HOLE, USB LEAD FREE VERSION

SIZE	CAGE CODE	DRAWING NO	RESTRICTED TO
A1	00779	C-5787617	—

CUSTOMER DRAWING SCALE 5:1 SHEET 1 OF 1 REV C2

4805 (3/11)

Downloaded from Arrow.com.