Ordering Information

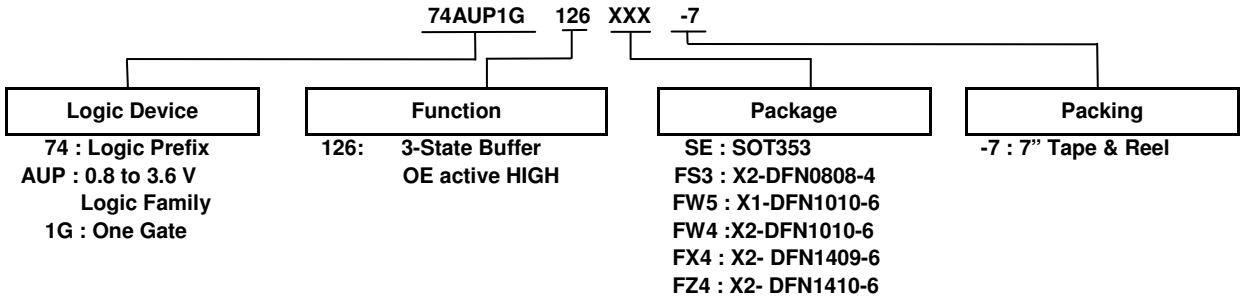

Device	Package Code	Package (Notes 4 & 5)	Package Size	7" Tape and Reel	
				Quantity	Part Number Suffix
74AUP1G126SE-7	SE	SOT353	2.0mm x 2.0mm x 1.1mm 0.65 mm lead pitch	3,000/Tape & Reel	-7
74AUP1G126FS3-7	FS3	X2-DFN0808-4	0.8mm x 0.8mm x 0.35mm 0.5 mm pad pitch (diamond)	5,000/Tape & Reel	-7
74AUP1G126FW5-7	FW5	X1-DFN1010-6	1.0mm x 1.0mm x 0.5mm 0.35 mm pad pitch	5,000/Tape & Reel	-7
74AUP1G126FW4-7	FW4	X2-DFN1010-6	1.0mm x 1.0mm x 0.4mm 0.35 mm pad pitch	5,000/Tape & Reel	-7
74AUP1G126FX4-7	FX4	X2-DFN1409-6 Chip Scale Alternative	1.4mm x 0.9mm x 0.4mm 0.5 mm pad pitch	5,000/Tape & Reel	-7
74AUP1G126FZ4-7	FZ4	X2-DFN1410-6	1.4mm x 1.0mm x 0.4mm 0.5 mm pad pitch	5,000/Tape & Reel	-7

Notes: 4. Pad layout as shown on Diodes Inc. suggested pad layout document AP02001, which can be found on our website at http://www.diodes.com/datasheets/ap02001.pdf.
5. The taping orientation is located on our website at http://www.diodes.com/datasheets/ap02007.pdf.

Pin Descriptions

Pin Name	Function
OE	Output Enable
A	Data Input
GND	Ground
Y	Data Output
V_{CC}	Supply Voltage

Logic Diagram

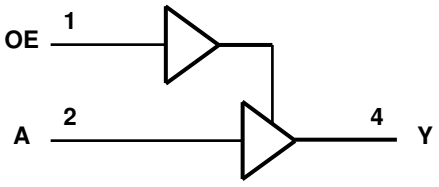

Function Table

Inputs		Output
OE	A	Y
H	H	H
H	L	L
L	X	Z

© Diodes Incorporated
Downloaded from Arrow.com.

Absolute Maximum Ratings (Notes 6 & 7) (@T_A = +25°C, unless otherwise specified.)

Symbol	Description	Rating	Unit
ESD HBM	Human Body Model ESD Protection	2	kV
ESD CDM	Charged Device Model ESD Protection	1	kV
V_{CC}	Supply Voltage Range	-0.5 to +4.6	V
V_I	Input Voltage Range	-0.5 to +4.6	V
V_O	Voltage Applied to Output in High or Low State	-0.5 to V_{CC} +0.5	V
I_{IK}	Input Clamp Current $V_I < 0$	50	mA
I_{OK}	Output Clamp Current ($V_O < 0$)	50	mA
I_O	Continuous Output Current (V_O = 0 to V_{CC})	±20	mA
I_{CC}	Continuous Current Through V_{CC}	50	mA
I_{GND}	Continuous Current Through GND	-50	mA
T_J	Operating Junction Temperature	-40 to +150	°C
T_{STG}	Storage Temperature	-65 to +150	°C

Notes: 6. Stresses beyond the absolute maximum may result in immediate failure or reduced reliability. These are stress values and device operation should be within recommend values.
7. Forcing the maximum allowed voltage could cause a condition exceeding the maximum current or conversely forcing the maximum current could cause a condition exceeding the maximum voltage. The ratings of both current and voltage must be maintained within the controlled range.

Recommended Operating Conditions (Note 8) (@T_A = +25°C, unless otherwise specified.)

Symbol	Parameter		Min	Max	Unit
V_{CC}	Operating Voltage		0.8	3.6	V
V_I	Input Voltage		0	3.6	V
V_O	Output Voltage		0	V_{CC}	V
I_{OH}	High-Level Output Current	V_{CC} = 0.8V	—	-20	µA
		V_{CC} = 1.1V	—	-1.1	mA
		V_{CC} = 1.4V	—	-1.7	
		V_{CC} = 1.65V	—	-1.9	
		V_{CC} = 2.3V	—	-3.1	
		V_{CC} = 3.0V	—	-4	
I_{OL}	Low-Level Output Current	V_{CC} = 0.8V	—	20	µA
		V_{CC} = 1.1V	—	1.1	mA
		V_{CC} = 1.4V	—	1.7	
		V_{CC} = 1.65V	—	1.9	
		V_{CC} = 2.3V	—	3.1	
		V_{CC} = 3.0V	—	4	
Δt/ΔV	Input Transition Rise or Fall Rate	V_{CC} = 0.8V to 3.6V	—	200	ns/V
T_A	Operating Free-Air Temperature		-40	+125	°C

Note: 8. Unused inputs should be held at V_{CC} or Ground.

© Diodes Incorporated
Downloaded from Arrow.com.

Electrical Characteristics (@T_A = +25°C, unless otherwise specified.)

Symbol	Parameter	Test Conditions	V_{CC}	T_A = +25°C		T_A = -40°C to +85°C		Unit
				Min	Max	Min	Max	
V_{IH}	High-Level Input Voltage	—	0.8V to 1.65V	0.80 x V_{CC}	—	0.80 x V_{CC}	—	V
		—	1.65V to 1.95V	0.65 x V_{CC}	—	0.65 x V_{CC}	—	
		—	2.3V to 2.7V	1.6	—	1.6	—	
		—	3.0V to 3.6V	2.0	—	2.0	—	
V_{IL}	Low-Level Input Voltage	—	0.8V to 1.65V	—	0.30 x V_{CC}	—	0.30 x V_{CC}	V
		—	1.65V to 1.95V	—	0.35 x V_{CC}	—	0.35 x V_{CC}	
		—	2.3V to 2.7V	—	0.7	—	0.7	
		—	3.0V to 3.6V	—	0.9	—	0.9	
V_{OH}	High-Level Output Voltage	I_{OH} = -20µA	0.8V to 3.6V	V_{CC} – 0.1	—	V_{CC} – 0.1	—	V
		I_{OH} = -1.1mA	1.1V	0.75 x V_{CC}	—	0.7 x V_{CC}	—	
		I_{OH} = -1.7mA	1.4V	1.11	—	1.03	—	
		I_{OH} = -1.9mA	1.65V	1.32	—	1.3	—	
		I_{OH} = -2.3mA	2.3V	2.05	—	1.97	—	
		I_{OH} = -3.1mA		1.9	—	1.85	—	
		I_{OH} = -2.7mA	3V	2.72	—	2.67	—	
		I_{OH} = -4mA		2.6	—	2.55	—	
V_{OL}	Low-Level Output Voltage	I_{OL} = 20µA	0.8V to 3.6V	—	0.1	—	0.1	V
		I_{OL} = 1.1mA	1.1V	—	0.3 x V_{CC}	—	0.3 x V_{CC}	
		I_{OL} = 1.7mA	1.4V	—	0.31	—	0.37	
		I_{OL} = 1.9mA	1.65V	—	0.31	—	0.35	
		I_{OL} = 2.3mA	2.3V	—	0.31	—	0.33	
		I_{OL} = 3.1mA		—	0.44	—	0.45	
		I_{OL} = 2.7mA	3V	—	0.31	—	0.33	
		I_{OL} = 4mA		—	0.44	—	0.45	
I_I	Input Current	A or B Input V_I = GND to 3.6V	0 to 3.6V	—	±0.1	—	±0.5	µA
I_{OFF}	Power Down Leakage Current	V_I or V_O = 0V to 3.6V	0	—	±0.2	—	±0.5	µA
I_{OZ}	Z State Leakage Current	V_O = 3.6V V_i = 3.6V	3.6V	—	±0.2	—	±0.5	µA
ΔI_{OFF}	Delta Power Down Leakage Current	V_I or V_O = 0V to 3.6V	0 to 0.2V	—	0.2	—	0.6	µA
I_{CC}	Supply Current	V_I = GND or V_{CC}, I_O = 0	0.8V to 3.6V	—	0.5	—	0.9	µA
ΔI_{CC}	Additional Supply Current	Data Input at V_{CC} -0.6V OE = GND I_O = 0A	3.3V	—	40	—	50	µA
		OE Input at V_{CC} -0.6V Data Input = GND or Vcc, I_O = 0A	3.3V	—	110	—	120	µA
		OE Input at GND Data Input = GND to 3.6V, I_O = 0A	0.8V to 3.6V	—	1	—	1	µA

© Diodes Incorporated
Downloaded from Arrow.com.

Electrical Characteristics (continued) (@T_A = +25°C, unless otherwise specified.)

Symbol	Parameter	Test Conditions	V_{CC}	T_A = -40°C to +125°C		Unit
				Min	Max	
V_{IH}	High-Level Input Voltage	—	0.8V to 1.65V	0.80 x V_{CC}	—	V
		—	1.65V to 1.95V	0.70 x V_{CC}	—	
		—	2.3V to 2.7V	1.6	—	
		—	3.0V to 3.6V	2.0	—	
V_{IL}	Low-Level Input Voltage	—	0.8V to 1.65V	—	0.25 x V_{CC}	V
		—	1.65V to 1.95V	—	0.35 x V_{CC}	
		—	2.3V to 2.7V	—	0.7	
		—	3.0V to 3.6V	—	0.9	
V_{OH}	High-Level Output Voltage	I_{OH} = -20µA	0.8V to 3.6V	V_{CC} – 0.11	—	V
		I_{OH} = -1.1mA	1.1V	0.6 x V_{CC}	—	
		I_{OH} = -1.7mA	1.4V	0.93	—	
		I_{OH} = -1.9mA	1.65V	1.17	—	
		I_{OH} = -2.3mA	2.3V	1.77	—	
		I_{OH} = -3.1mA		1.67	—	
		I_{OH} = -2.7mA	3V	2.40	—	
		I_{OH} = -4mA		2.30	—	
V_{OL}	Low-Level Output Voltage	I_{OL} = 20µA	0.8V to 3.6V	—	0.11	V
		I_{OL} = 1.1mA	1.1V	—	0.3 x V_{CC}	
		I_{OL} = 1.7mA	1.4V	—	0.41	
		I_{OL} = 1.9mA	1.65V	—	0.39	
		I_{OL} = 2.3mA	2.3V	—	0.36	
		I_{OL} = 3.1mA		—	0.50	
		I_{OL} = 2.7mA	3V	—	0.36	
		I_{OL} = 4mA		—	0.50	
I_I	Input Current	A or B Input V_I = GND to 3.6V	0 to 3.6V	—	±0.75	µA
I_{OFF}	Power Down Leakage Current	V_I or V_O = 0V to 3.6V	0	—	±3.5	µA
I_{OZ}	Z State Leakage Current	V_O = 3.6V V_i = 3.6V	3.6V	—	±1.5	µA
ΔI_{OFF}	Delta Power Down Leakage Current	V_I or V_O = 0V to 3.6V	0V to 0.2V	—	±2.5	µA
I_{CC}	Supply Current	V_I = GND or V_{CC}, I_O = 0	0.8V to 3.6V	—	3.0	µA
ΔI_{CC}	Additional Supply Current	Data Input at V_{CC} -0.6V OE = GND I_O = 0A	3.3V	—	75	µA
		OE input at V_{CC} -0.6V Data Input = GND or Vcc, I_O = 0A	3.3V	—	180	µA
		OE Input at GND Data Input = GND to 3.6V, I_O = 0A	0.8V to 3.6V	—	1	µA

© Diodes Incorporated
Downloaded from Arrow.com.

Switching Characteristics

C_L = 5pF, See Figure 1

Parameter	From Input	To Output	V_{CC}	T_A = +25°C			T_A = -40°C to +85°C		T_A = -40°C to +125°C		Unit
				Min	Typ	Max	Min	Max	Min	Max	
t_{pd}	A	Y	0.8V	—	20.6	—	—	—	—	—	ns
			1.2V ± 0.1V	2.5	5.5	10.5	2.5	11.7	2.5	12.9	
			1.5V ± 0.1V	2.0	3.9	6.1	2.0	7.3	2.0	8.1	
			1.8V ± 0.15V	1.9	3.2	4.8	1.7	6.1	1.7	6.7	
			2.5V ± 0.2V	1.6	2.6	3.6	1.4	4.3	1.4	4.9	
			3.3V ± 0.3V	1.4	2.4	3.1	1.2	3.9	1.2	4.4	
t_{en}	OE	Y	0.8V	—	71.6	—	—	—	—	—	ns
			1.2V ± 0.1V	2.8	6.2	12.4	2.6	13.6	2.6	13.6	
			1.5V ± 0.1V	2.1	4.2	6.9	2.1	7.4	2.1	7.7	
			1.8V ± 0.15V	1.7	3.3	5.3	1.7	5.9	1.7	6.2	
			2.5V ± 0.2V	1.4	2.4	3.6	1.4	3.8	1.4	4.1	
			3.3V ± 0.3V	1.3	2.0	2.9	1.2	3.2	1.2	3.4	
t_{dis}	OE	Y	0.8V	—	10.3	—	—	—	—	—	ns
			1.2V ± 0.1V	2.6	4.2	8.2	2.6	8.9	2.6	8.9	
			1.5V ± 0.1V	2.1	3.2	6.7	2.1	7.0	2.1	7.0	
			1.8V ± 0.15V	1.7	3.1	6.2	1.7	6.5	1.7	6.5	
			2.5V ± 0.2V	1.3	2.9	5.7	1.3	5.8	1.3	5.8	
			3.3V ± 0.3V	1.2	2.8	4.5	1.2	4.7	1.2	4.7	

C_L = 10pF, See Figure 1

Parameter	From Input	To Output	V_{CC}	T_A = +25°C			T_A = -40°C to +85°C		T_A = -40°C to +125°C		Unit
				Min	Typ	Max	Min	Max	Min	Max	
t_{pd}	A	Y	0.8V	—	24.0	—	—	—	—	—	ns
			1.2V ± 0.1V	2.6	6.4	12.3	2.6	13.8	2.6	15.2	
			1.5V ± 0.1V	2.1	4.5	7.3	2.1	8.5	2.1	9.4	
			1.8V ± 0.15V	1.9	3.8	5.5	1.9	6.8	1.9	7.6	
			2.5V ± 0.2V	1.7	3.2	4.2	1.7	5.3	1.7	5.9	
			3.3V ± 0.3V	1.6	3.0	3.8	1.6	4.6	1.6	5.2	
t_{en}	OE	Y	0.8V	—	75.3	—	—	—	—	—	ns
			1.2V ± 0.1V	3.0	7.1	14.1	3.0	15.4	3.0	15.4	
			1.5V ± 0.1V	2.1	4.8	8.0	2.1	8.3	2.1	8.6	
			1.8V ± 0.15V	1.7	3.9	5.9	1.7	6.5	1.7	6.8	
			2.5V ± 0.2V	1.4	2.9	4.2	1.4	4.5	1.4	4.8	
			3.3V ± 0.3V	1.3	2.6	3.6	1.3	3.8	1.3	4.0	
t_{dis}	OE	Y	0.8V	—	12.2	—	—	—	—	—	ns
			1.2V ± 0.1V	3.3	7.9	10.1	3.3	11.1	3.3	11.1	
			1.5V ± 0.1V	2.1	7.0	9.3	2.1	10.1	2.1	10.1	
			1.8V ± 0.15V	1.7	6.3	8.7	1.7	9.1	1.7	9.1	
			2.5V ± 0.2V	1.4	4.9	7.6	1.4	7.8	1.4	7.8	
			3.3V ± 0.3V	1.3	4.1	5.7	1.3	5.8	1.3	5.8	

© Diodes Incorporated
Downloaded from Arrow.com.

Switching Characteristics (continued)

C_L=15pF, See Figure 1

Parameter	From Input	To Output	V_{CC}	T_A = +25°C			T_A = -40°C to +85°C		T_A = -40°C to +125°C		Unit
				Min	Typ	Max	Min	Max	Min	Max	
t_{pd}	A	Y	0.8V	—	27.4	—	—	—	—	—	ns
			1.2V ± 0.1V	3.6	7.2	14.1	3.3	15.8	3.3	17.5	
			1.5V ± 0.1V	3.0	5.1	8.1	2.5	9.8	2.5	10.9	
			1.8V ± 0.15V	2.2	4.3	6.3	2.0	7.9	2.0	8.8	
			2.5V ± 0.2V	2.0	3.7	4.9	1.8	6.0	1.8	6.7	
			3.3V ± 0.3V	2.0	3.5	4.4	1.8	5.4	1.8	6.1	
t_{en}	OE	Y	0.8V	—	79.2	—	—	—	—	—	ns
			1.2V ± 0.1V	3.6	7.8	15.8	3.3	17.1	3.3	17.1	
			1.5V ± 0.1V	3.0	5.4	8.8	2.9	9.4	2.9	9.7	
			1.8V ± 0.15V	2.1	4.3	6.7	2.0	7.3	2.0	7.7	
			2.5V ± 0.2V	1.8	3.4	4.8	1.7	5.2	1.7	5.6	
			3.3V ± 0.3V	1.6	3.1	4.3	1.5	4.5	1.5	4.7	
t_{dis}	OE	Y	0.8V	—	14.9	—	—	—	—	—	ns
			1.2V ± 0.1V	3.7	9.0	12.7	3.7	13.0	3.7	13.0	
			1.5V ± 0.1V	2.5	8.1	11.5	2.5	12.0	2.5	12.0	
			1.8V ± 0.15V	2.0	7.9	10.1	2.0	10.4	2.0	10.4	
			2.5V ± 0.2V	1.7	7.7	9.7	1.7	9.9	1.7	9.9	
			3.3V ± 0.3V	1.5	7.2	9.0	1.5	9.3	1.5	9.3	

C_L=30pF, See Figure 1

Parameter	From Input	To Output	V_{CC}	T_A = +25°C			T_A = -40°C to +85°C		T_A = -40°C to +125°C		Unit
				Min	Typ	Max	Min	Max	Min	Max	
t_{pd}	A	Y	0.8V	—	37.4	—	—	—	—	—	ns
			1.2V ± 0.1V	4.8	9.5	18.7	4.4	21.4	4.4	24.0	
			1.5V ± 0.1V	4.0	6.7	10.8	3.0	13.0	3.0	14.5	
			1.8V ± 0.15V	2.5	5.6	8.4	2.5	10.3	2.5	11.5	
			2.5V ± 0.2V	2.2	4.8	6.3	2.2	7.8	2.2	8.7	
			3.3V ± 0.3V	2.0	4.6	5.8	2.0	7.0	2.0	8.3	
t_{en}	OE	Y	0.8V	—	90.6	—	—	—	—	—	ns
			1.2V ± 0.1V	4.7	10.0	20.4	4.3	22.0	4.3	22.0	
			1.5V ± 0.1V	3.5	6.9	11.3	3.5	12.0	3.5	12.5	
			1.8V ± 0.15V	2.6	5.6	8.6	3.2	9.5	3.2	10.1	
			2.5V ± 0.2V	2.3	4.5	6.3	2.9	6.8	2.9	7.3	
			3.3V ± 0.3V	2.2	4.2	5.8	2.7	6.4	2.7	6.7	
t_{dis}	OE	Y	0.8V	—	51.6	—	—	—	—	—	ns
			1.2V ± 0.1V	4.7	12.8	15.0	4.7	15.5	4.7	15.5	
			1.5V ± 0.1V	3.0	11.8	13.5	3.0	13.9	3.0	13.9	
			1.8V ± 0.15V	2.6	10.8	12.7	2.6	13.2	2.6	12.7	
			2.5V ± 0.2V	2.3	10.1	12.0	2.3	12.5	2.3	12.5	
			3.3V ± 0.3V	2.2	9.0	11.5	2.2	12.0	2.2	12.0	

© Diodes Incorporated
Downloaded from Arrow.com.

Operating and Package Characteristics (@T_A = +25°C, unless otherwise specified.)

Parameter		Test Conditions		V_{CC}	Typ	Unit
C_{pd}	Power Dissipation Capacitance	f = 1MHz No Load		0.8V	6.9	pF
				1.2V ± 0.1V	6.7	
				1.5V ± 0.1V	6.6	
				1.8V ± 0.15V	6.5	
				2.5V ± 0.2V	6.4	
				3.3V ± 0.3V	6.3	
C_i	Input Capacitance	V_i = V_{CC} or GND		0V or 3.3V	1.5	pF
θ_{JA}	Thermal Resistance Junction-to-Ambient	SOT353	(Note 9)	—	371	°C/W
		X2-DFN0808-4		—	430	
		X1-DFN1010-6		—	435	
		X2-DFN1010-6		—	445	
		X2-DFN1409-6		—	470	
		X2-DFN1410-6		—	460	
θ_{JC}	Thermal Resistance Junction-to-Case	SOT353	(Note 9)	—	143	°C/W
		X2-DFN0808-4		—	240	
		X1-DFN1010-6		—	250	
		X2-DFN1010-6		—	250	
		X2-DFN1409-6		—	275	
		X2-DFN1410-6		—	265	

Note: 9. Test condition for each of the six package types: Device mounted on FR-4 substrate PC board, 2oz copper, with minimum recommended pad layout.

© Diodes Incorporated
Downloaded from Arrow.com.

Parameter Measurement Information

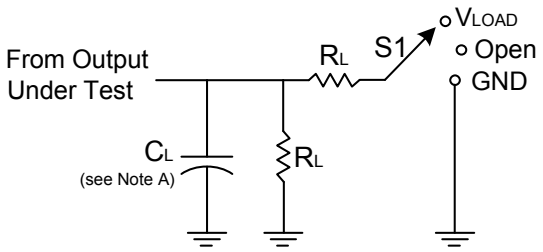

TEST	S1	R_L
t_{PLH}/t_{PHL}	Open	1MΩ
t_{PLZ}/t_{PZL}	Vload	5kΩ
t_{PHZ}/t_{PZH}	GND	5kΩ

V_{CC}	Inputs		V_M	V_{LOAD}	C_L	V_Δ
	V_I	t_r/t_f				
0.8V	V_{CC}	≤3ns	$V_{CC}/2$	2 X V_{CC}	5, 10, 15, 30pF	0.1V
1.2V ± 0.1V	V_{CC}	≤3ns	$V_{CC}/2$	2 X V_{CC}	5, 10, 15, 30pF	0.1V
1.5V ± 0.1V	V_{CC}	≤3ns	$V_{CC}/2$	2 X V_{CC}	5, 10, 15, 30pF	0.1V
1.8V ± 0.15V	V_{CC}	≤3ns	$V_{CC}/2$	2 X V_{CC}	5, 10, 15, 30pF	0.15V
2.5V ± 0.2V	V_{CC}	≤3ns	$V_{CC}/2$	2 X V_{CC}	5, 10, 15, 30pF	0.15V
3.3V ± 0.3V	V_{CC}	≤3ns	$V_{CC}/2$	2 X V_{CC}	5, 10, 15, 30pF	0.3V

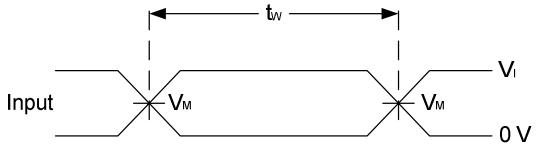

Voltage Waveform Pulse Duration

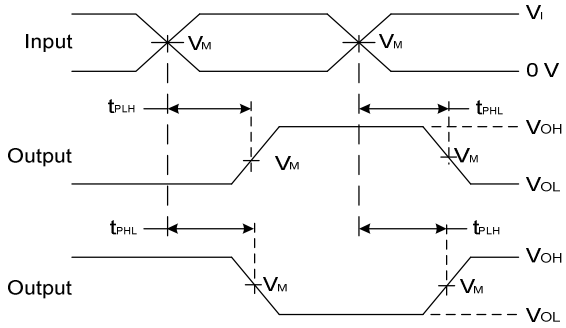

Voltage Waveform Propagation Delay Times
Inverting and Non Inverting Outputs

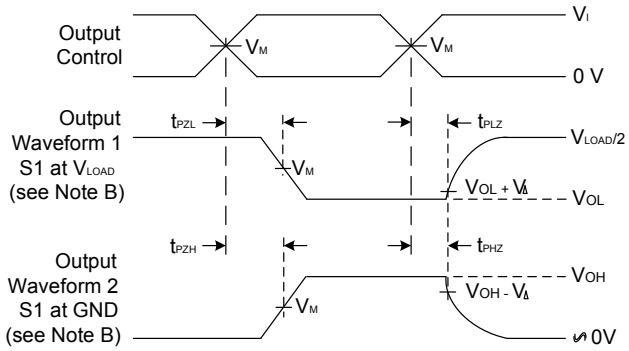

Voltage Waveform Enable and Disable Times
Low and High Level Enabling

Figure 1 Load Circuit and Voltage Waveforms

Notes:
A. Includes test lead and test apparatus capacitance.
B. All pulses are supplied at pulse repetition rate ≤ 10MHz.
C. Inputs are measured separately one transition per measurement.
D. t_{PLZ} and t_{PHZ} are the same as t_{dis}.
E. t_{PZL} and t_{PZH} are the same as t_{EN}.
F. t_{PLH} and t_{PHL} are the same as t_{PD}.

© Diodes Incorporated
Downloaded from Arrow.com.

Marking Information

(1) SOT353

(Top View)

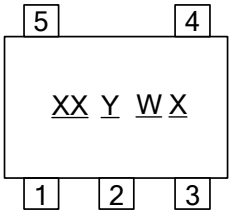

XX : Identification code
Y : Year 0~9
W : Week : A~Z : 1~26 week;
a~z : 27~52 week; z represents 52 and 53 week
X : A~Z : Internal code

Part Number	Package	Identification Code
74AUP1G126SE-7	SOT353	XZ

(2) X2-DFN0808-4, X2-DFN1010-6 X2-DFN1409-6 and X2-DFN1410-6

(Top View)

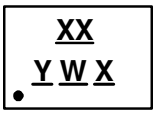

XX : Identification Code
Y : Year : 0~9
W : Week : A~Z : 1~26 week;
a~z : 27~52 week; z represents 52 and 53 week
X : A~Z : Internal code

Part Number	Package	Identification Code
74AUP1G126FS3-7	X2-DFN0808-4	YZ
74AUP1G126FW5-7	X1-DFN1010-6	QY
74AUP1G126FW4-7	X2-DFN1010-6	XZ
74AUP1G126FX4-7	X2-DFN1409-6	HR
74AUP1G126FZ4-7	X2-DFN1410-6	XZ

© Diodes Incorporated
Downloaded from Arrow.com.

SOT353 Package Outline Dimensions and Suggested Pad Layout

Please see AP02002 at http://www.diodes.com/datasheets/ap02002.pdf for the latest version.

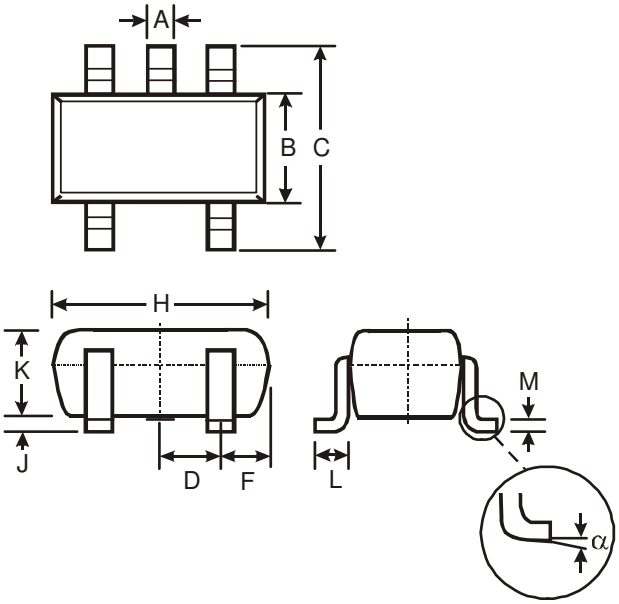

SOT353			
Dim	**Min**	**Max**	**Typ**
A	0.10	0.30	0.25
B	1.15	1.35	1.30
C	2.00	2.20	2.10
D	0.65 Typ		
F	0.40	0.45	0.425
H	1.80	2.20	2.15
J	0	0.10	0.05
K	0.90	1.00	1.00
L	0.25	0.40	0.30
M	0.10	0.22	0.11
α	0°	8°	-
All Dimensions in mm			

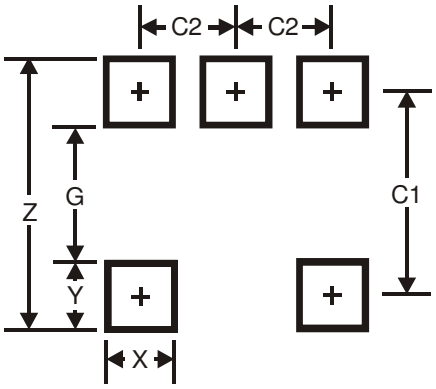

Dimensions	Value (in mm)
Z	2.5
G	1.3
X	0.42
Y	0.6
C1	1.9
C2	0.65

© Diodes Incorporated
Downloaded from Arrow.com.

X2-DFN0808-4 Package Outline Dimensions and Suggested Pad Layout

Please see AP02002 at http://www.diodes.com/datasheets/ap02002.pdf for the latest version.

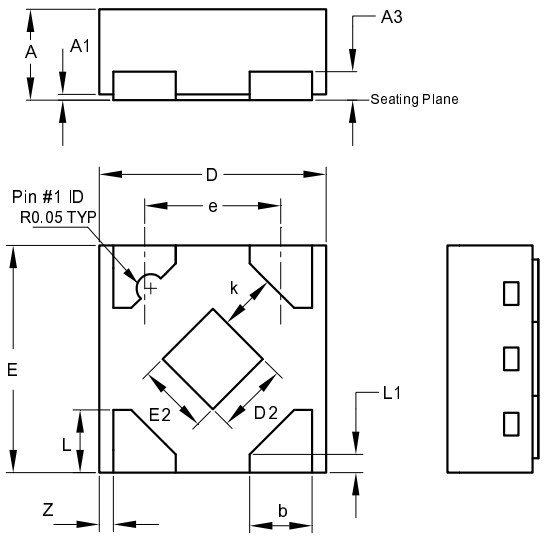

X2-DFN0808-4			
Dim	Min	Max	Typ
A	0.25	0.35	0.30
A1	0	0.04	0.02
A3	-	-	0.13
b	0.17	0.27	0.22
D	0.75	0.85	0.80
D2	0.15	0.35	0.25
E	0.75	0.85	0.80
E2	0.15	0.35	0.25
e	-	-	0.48
k	0.20	-	-
L	0.17	0.27	0.22
L1	0.02	0.12	0.07
z	-	-	0.05
All Dimensions in mm			

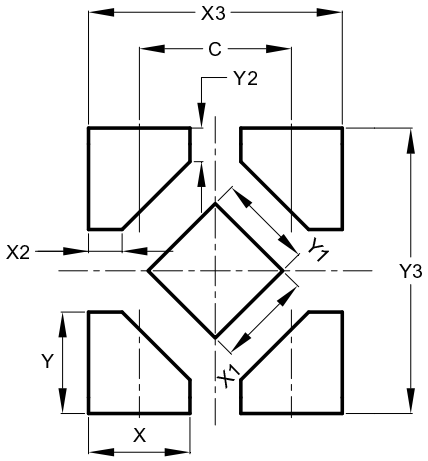

Dimensions	Value
C	0.480
X	0.320
X1	0.300
X2	0.106
X3	0.800
Y	0.320
Y1	0.300
Y2	0.106
Y3	0.900

© Diodes Incorporated
Downloaded from Arrow.com.

X1-DFN1010-6 (Type B) Package Outline Dimensions and Suggested Pad Layout

Please see AP02002 at http://www.diodes.com/datasheets/ap02002.pdf for the latest version.

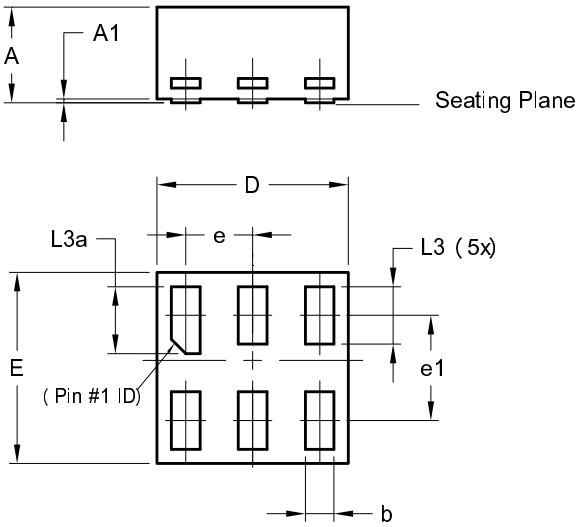

X1-DFN1010-6 (Type B)			
Dim	**Min**	**Max**	**Typ**
A	-	0.50	0.39
A1	-	0.04	-
b	0.12	0.20	0.15
D	0.95	1.050	1.00
E	0.95	1.050	1.00
e	0.35 BSC		
e1	0.55 BSC		
L3	0.27	0.30	0.30
L3a	0.32	0.40	0.35
All Dimensions in mm			

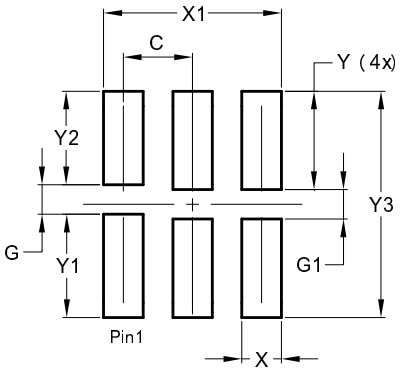

Dimensions	Value (in mm)
C	0.350
G	0.150
G1	0.150
X	0.200
X1	0.900
Y	0.500
Y1	0.525
Y2	0.475
Y3	1.150

© Diodes Incorporated
Downloaded from Arrow.com.

X2-DFN1010-6 Package Outline Dimensions and Suggested Pad Layout

Please see AP02002 at http://www.diodes.com/datasheets/ap02002.pdf for the latest version.

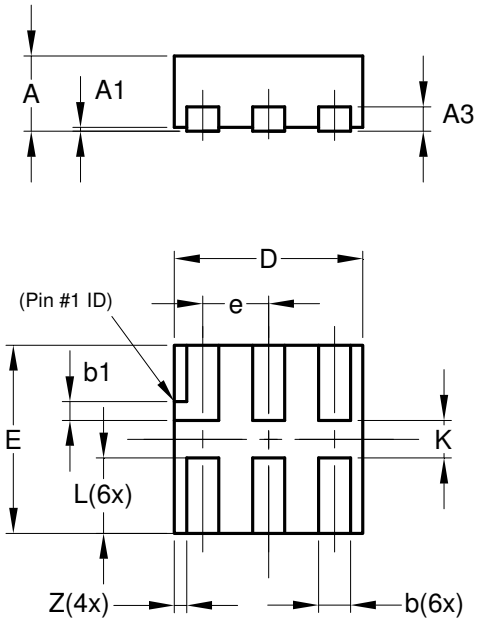

X2-DFN1010-6			
Dim	**Min**	**Max**	**Typ**
A	—	0.40	0.39
A1	0.00	0.05	0.02
A3	—	—	0.13
b	0.14	0.20	0.17
b1	0.05	0.15	0.10
D	0.95	1.05	1.00
E	0.95	1.05	1.00
e	—	—	0.35
L	0.35	0.45	0.40
K	0.15	—	—
Z	—	—	0.065
All Dimensions in mm			

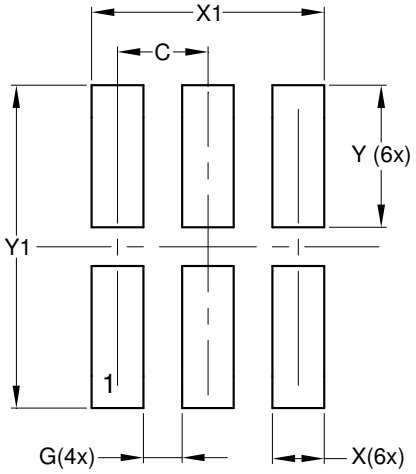

Dimensions	Value (in mm)
C	0.350
G	0.150
X	0.200
X1	0.900
Y	0.550
Y1	1.250

© Diodes Incorporated
Downloaded from Arrow.com.

X2-DFN1409-6 Package Outline Dimensions and Suggested Pad Layout

Please see AP02002 at http://www.diodes.com/datasheets/ap02002.pdf for the latest version.

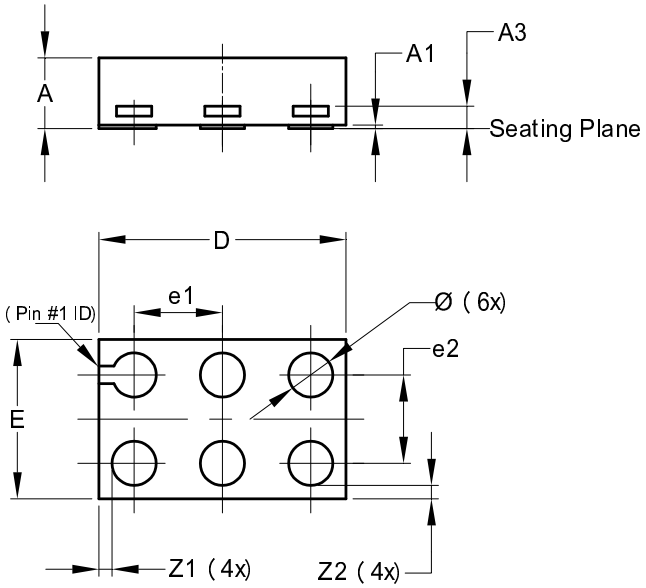

X2-DFN1409-6			
Dim	**Min**	**Max**	**Typ**
A	-	0.40	0.39
A1	0	0.05	0.02
A3	-	-	0.13
Ø	0.20	0.30	0.25
D	1.35	1.45	1.40
E	0.85	0.95	0.90
e1	-	-	0.50
e2	-	-	0.50
Z1	-	-	0.075
Z2	-	-	0.075
All Dimensions in mm			

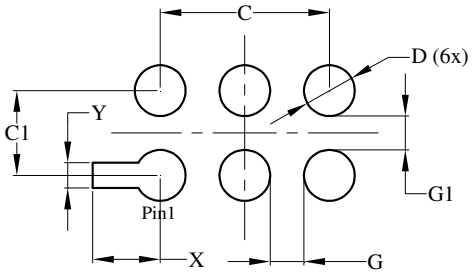

Dimensions	Value (in mm)
C	1.000
C1	0.500
D	0.300
G	0.200
G1	0.200
X	0.400
Y	0.150

© Diodes Incorporated
Downloaded from Arrow.com.

X2-DFN1410-6 Package Outline Dimensions and Suggested Pad Layout

Please see AP02002 at http://www.diodes.com/datasheets/ap02002.pdf for the latest version.

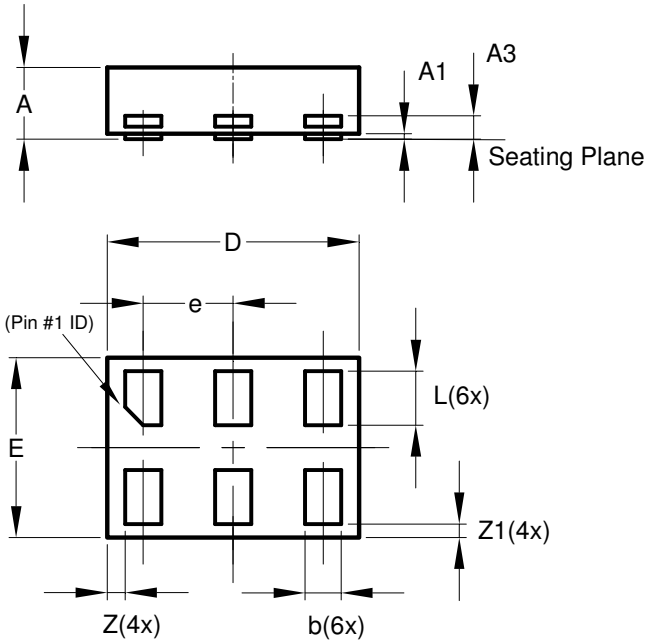

X2-DFN1410-6			
Dim	**Min**	**Max**	**Typ**
A	—	0.40	0.39
A1	0.00	0.05	0.02
A3	—	—	0.13
b	0.15	0.25	0.20
D	1.35	1.45	1.40
E	0.95	1.05	1.00
e	—	—	0.50
L	0.25	0.35	0.30
Z	—	—	0.10
Z1	0.045	0.105	0.075
All Dimensions in mm			

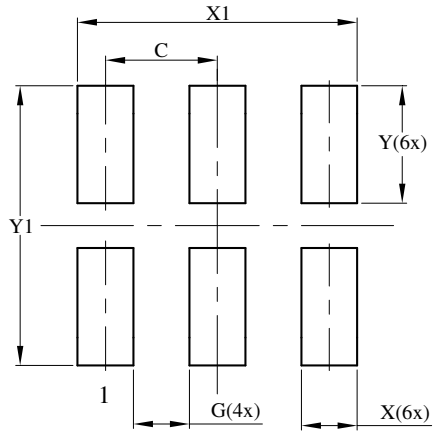

Dimensions	Value (in mm)
C	0.500
G	0.250
X	0.250
X1	1.250
Y	0.525
Y1	1.250

© Diodes Incorporated
Downloaded from Arrow.com.

IMPORTANT NOTICE

DIODES INCORPORATED MAKES NO WARRANTY OF ANY KIND, EXPRESS OR IMPLIED, WITH REGARDS TO THIS DOCUMENT, INCLUDING, BUT NOT LIMITED TO, THE IMPLIED WARRANTIES OF MERCHANTABILITY AND FITNESS FOR A PARTICULAR PURPOSE (AND THEIR EQUIVALENTS UNDER THE LAWS OF ANY JURISDICTION).

Diodes Incorporated and its subsidiaries reserve the right to make modifications, enhancements, improvements, corrections or other changes without further notice to this document and any product described herein. Diodes Incorporated does not assume any liability arising out of the application or use of this document or any product described herein; neither does Diodes Incorporated convey any license under its patent or trademark rights, nor the rights of others. Any Customer or user of this document or products described herein in such applications shall assume all risks of such use and will agree to hold Diodes Incorporated and all the companies whose products are represented on Diodes Incorporated website, harmless against all damages.

Diodes Incorporated does not warrant or accept any liability whatsoever in respect of any products purchased through unauthorized sales channel.
Should Customers purchase or use Diodes Incorporated products for any unintended or unauthorized application, Customers shall indemnify and hold Diodes Incorporated and its representatives harmless against all claims, damages, expenses, and attorney fees arising out of, directly or indirectly, any claim of personal injury or death associated with such unintended or unauthorized application.

Products described herein may be covered by one or more United States, international or foreign patents pending. Product names and markings noted herein may also be covered by one or more United States, international or foreign trademarks.

This document is written in English but may be translated into multiple languages for reference. Only the English version of this document is the final and determinative format released by Diodes Incorporated.

LIFE SUPPORT

Diodes Incorporated products are specifically not authorized for use as critical components in life support devices or systems without the express written approval of the Chief Executive Officer of Diodes Incorporated. As used herein:

A. Life support devices or systems are devices or systems which:

1. are intended to implant into the body, or

2. support or sustain life and whose failure to perform when properly used in accordance with instructions for use provided in the labeling can be reasonably expected to result in significant injury to the user.

B. A critical component is any component in a life support device or system whose failure to perform can be reasonably expected to cause the failure of the life support device or to affect its safety or effectiveness.

Customers represent that they have all necessary expertise in the safety and regulatory ramifications of their life support devices or systems, and acknowledge and agree that they are solely responsible for all legal, regulatory and safety-related requirements concerning their products and any use of Diodes Incorporated products in such safety-critical, life support devices or systems, notwithstanding any devices- or systems-related information or support that may be provided by Diodes Incorporated. Further, Customers must fully indemnify Diodes Incorporated and its representatives against any damages arising out of the use of Diodes Incorporated products in such safety-critical, life support devices or systems.

Copyright © 2015, Diodes Incorporated

www.diodes.com

Downloaded from Arrow.com.