ABSOLUTE MAXIMUM RATINGS (Note 1)

Supply Voltage
- LT1070/LT1071 (Note 2) 40V
- LT1070HV/LT1071HV (Note 2) 60V

Switch Output Voltage
- LT1070/LT1071 ..... 65V
- LT1070HV/LT1071HV 75V

Feedback Pin Voltage (Transient, 1ms) ..... ±15V

Operating Junction Temperature Range
- Commercial (Operating) ..... 0°C to 100°C
- Commercial (Short Circuit) ..... 0°C to 125°C
- Industrial ..... –40°C to 125°C
- Military **(OBSOLETE)** ..... –55°C to 150°C

Storage Temperature Range ..... –65°C to 150°C

Lead Temperature (Soldering, 10 sec) ..... 300°C

PACKAGE/ORDER INFORMATION

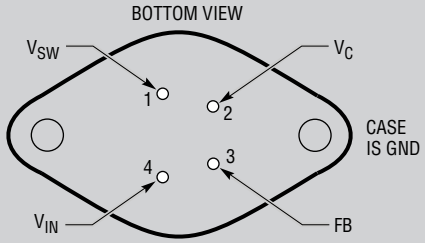

K PACKAGE
4-LEAD TO-3 METAL CAN

T_{JMAX} = 100°C, θ_{JA} = 35°C/W, Q_{JC} = 2°C (LT1070C, I)
T_{JMAX} = 150°C, θ_{JA} = 35°C/W, Q_{JC} = 2°C (LT1070M)
T_{JMAX} = 100°C, θ_{JA} = 35°C/W, Q_{JC} = 4°C (LT1071C, I)
T_{JMAX} = 150°C, θ_{JA} = 35°C/W, Q_{JC} = 4°C (LT1071M)

ORDER PART NUMBER
LT1070CK
LT1070HVCK
LT1070HVMK
LT1070IK
LT1070MK
LT1071CK
LT1071HVCK
LT1071HVMK
LT1071MK

OBSOLETE PACKAGE
Consider the T5 Package for Alternate Source

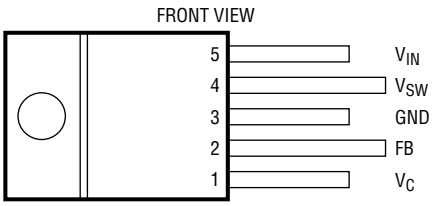

T PACKAGE
5-LEAD PLASTIC TO-220

T_{JMAX} = 100°C, θ_{JA} = 75°C/W, Q_{JC} = 2°C (LT1070C, I)
T_{JMAX} = 100°C, θ_{JA} = 75°C/W, Q_{JC} = 4°C (LT1071C)

ORDER PART NUMBER
LT1070CT
LT1070HVCT
LT1070HVIT
LT1070IT
LT1071CT
LT1071HVCT
LT1071HVIT
LT1071IT

Consult LTC Marketing for parts specified with wider operating temperature ranges.

ELECTRICAL CHARACTERISTICS

The ● denotes the specifications which apply over the full operating temperature range, otherwise specifications are at T_A = 25°C. V_{IN} = 15V, V_C = 0.5V, V_{FB} = V_{REF}, output pin open unless otherwise specified.

SYMBOL	PARAMETER	CONDITIONS		MIN	TYP	MAX	UNITS
V_{REF}	Reference Voltage	Measured at Feedback Pin, V_C = 0.8V		1.224	1.244	1.264	V
			●	1.214	1.244	1.274	V
I_B	Feedback Input Current	V_{FB} = V_{REF}			350	750	nA
			●			1100	nA
g_m	Error Amplifier Transconductance	ΔI_C = ±25μA		3000	4400	6000	μmho
			●	2400		7000	μmho
	Error Amplifier Source or Sink Current	V_C = 1.5V		150	200	350	μA
			●	120		400	μA
	Error Amplifier Clamp Voltage	Hi Clamp, V_{FB} = 1V		1.80		2.30	V
		Lo Clamp, V_{FB} = 1.5V		0.25	0.38	0.52	V
	Reference Voltage Line Regulation	3V ≤ V_{IN} ≤ V_{MAX}, V_C = 0.8V	●			0.03	%/V
A_V	Error Amplifier Voltage Gain	0.9V ≤ V_C ≤ 1.4V		500	800		V/V
	Minimum Input Voltage		●		2.6	3.0	V
I_Q	Supply Current	3V ≤ V_{IN} ≤ V_{MAX}, V_C = 0.6V			6	9	mA
	Control Pin Threshold	Duty Cycle = 0		0.8	0.9	1.08	V
			●	0.6		1.25	V
	Normal/Flyback Threshold on Feedback Pin			0.4	0.45	0.54	V

Downloaded from Arrow.com.

ELECTRICAL CHARACTERISTICS

The ● denotes the specifications which apply over the full operating temperature range, otherwise specifications are at T_A = 25°C. V_{IN} = 15V, V_C = 0.5V, V_{FB} = V_{REF}, output pin open unless otherwise specified.

SYMBOL	PARAMETER	CONDITIONS		MIN	TYP	MAX	UNITS
V_{FB}	Flyback Reference Voltage	I_{FB} = 50µA		15	16.3	17.6	V
			●	14		18.0	V
	Change in Flyback Reference Voltage	0.05 ≤ I_{FB} ≤ 1mA		4.5	6.8	8.5	V
	Flyback Reference Voltage Line Regulation	I_{FB} = 50µA, 3V ≤ V_{IN} ≤ V_{MAX} (Note 3)			0.01	0.03	%/V
	Flyback Amplifier Transconductance (g_m)	ΔI_C = ±10µA		150	300	650	µmho
	Flyback Amplifier Source and Sink Current	V_C = 0.6V, I_{FB} = 50µA (Source)	●	15	32	70	µA
		V_C = 0.6V, I_{FB} = 50µA (Sink)	●	25	40	70	µA
B_V	Output Switch Breakdown Voltage	3V ≤ V_{IN} ≤ V_{MAX}, I_{SW} = 1.5mA					
		(LT1070/LT1071)	●	65	90		V
		(LT1070HV/LT1071HV)	●	75	90		V
V_{SAT}	Output Switch "On" Resistance (Note 4)	LT1070	●		0.15	0.24	Ω
		LT1071	●		0.30	0.50	Ω
	Control Voltage to Switch Current Transconductance	LT1070			8		A/V
		LT1071			4		A/V
I_{LIM}	Switch Current Limit (LT1070)	Duty Cycle ≤ 50%, T_J ≥ 25°C	●	5		10	A
		Duty Cycle ≤ 50%, T_J < 25°C	●	5		11	A
		Duty Cycle = 80% (Note 5)	●	4		10	A
	Switch Current Limit (LT1071)	Duty Cycle ≤ 50%, T_J ≥ 25°C	●	2.5		5.0	A
		Duty Cycle ≤ 50%, T_J < 25°C	●	2.5		5.5	A
		Duty Cycle = 80% (Note 5)	●	2.0		5.0	A
$\frac{\Delta I_{IN}}{\Delta I_{SW}}$	Supply Current Increase During Switch "On" Time				25	35	mA/A
f	Switching Frequency			35	40	45	kHz
			●	33		47	kHz
DC (Max)	Maximum Switch Duty Cycle			90	92	97	%
	Flyback Sense Delay Time				1.5		µs
	Shutdown Mode Supply Current	3V ≤ V_{IN} ≤ V_{MAX}, V_C = 0.05V			100	250	µA
	Shutdown Mode Threshold Voltage	3V ≤ V_{IN} ≤ V_{MAX}		100	150	250	mV
			●	50		300	mV

Note 1: Absolute Maximum Ratings are those values beyond which the life of a device may be impaired.

Note 2: Minimum switch "on" time for the LT1070/LT1071 in current limit is ≈1µs. This limits the maximum input voltage during short-circuit conditions, *in the buck and inverting modes only*, to ≈35V. Normal (unshorted) conditions are not affected. Mask changes are being implemented which will reduce minimum "on" time to ≤1µs, increasing maximum short-circuit input voltage above 40V. If the present LT1070/LT1071 (contact factory for package date code) is being operated in the buck or inverting mode at high input voltages and short-circuit conditions are expected, a resistor must be placed in series with the inductor, as follows:

The value of the resistor is given by:

$$R = \frac{t \bullet f \bullet V_{IN} - V_F}{I_{LIMIT}} - R_L$$

t = Minimum "on" time of LT1070/LT1071 in current limit, ≈1µs
f = Operating frequency (40kHz)
V_F = Forward voltage of external catch diode at I_{LIMIT}
I_{LIMIT} = Current limit of LT1070 (≈8A), LT1071 (≈4A)
R_L = Internal series resistance of inductor

Note 3: V_{MAX} = 55V for LT1070HV and LT1071HV to avoid switch breakdown.

Note 4: Measured with V_C in hi clamp, V_{FB} = 0.8V. I_{SW} = 4A for LT1070 and 2A for LT1071.

Note 5: For duty cycles (DC) between 50% and 80%, minimum guaranteed switch current is given by I_{LIM} = 3.33 (2 – DC) for the LT1070 and I_{LIM} = 1.67 (2 – DC) for the LT1071.

Downloaded from Arrow.com.

TYPICAL PERFORMANCE CHARACTERISTICS

Switch Current Limit vs Duty Cycle

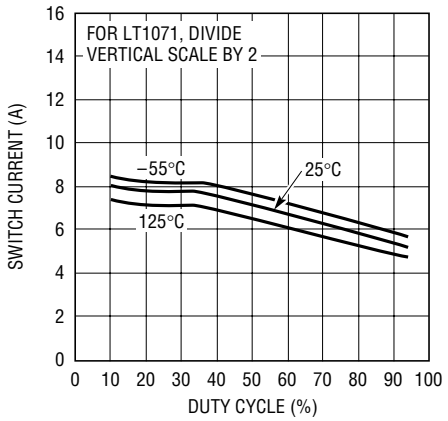

Maximum Duty Cycle

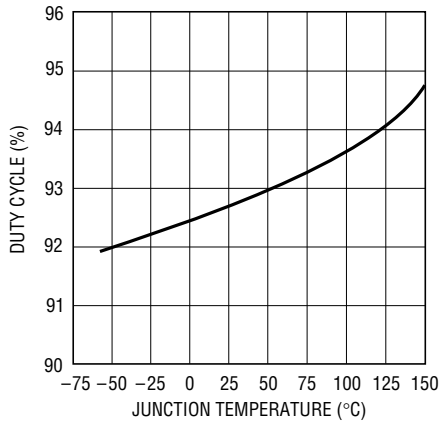

Flyback Blanking Time

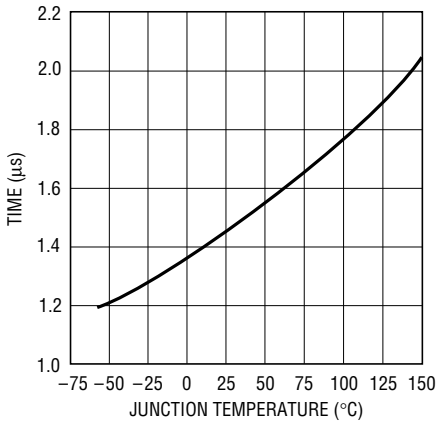

Minimum Input Voltage

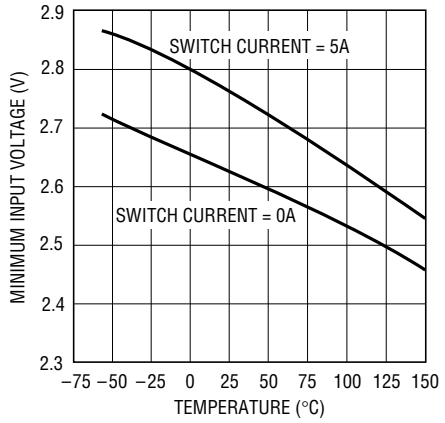

Switch Saturation Voltage

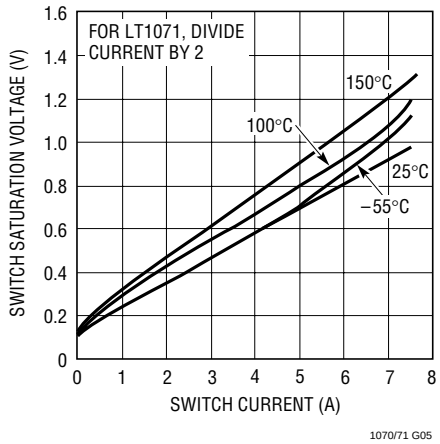

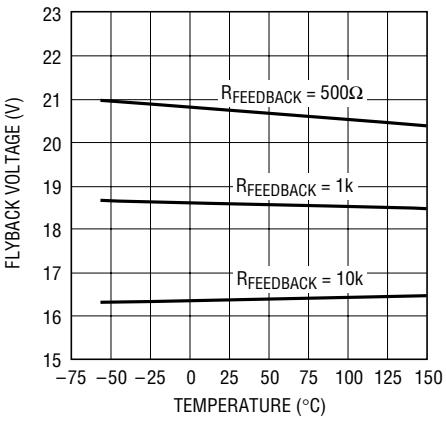

Line Regulation

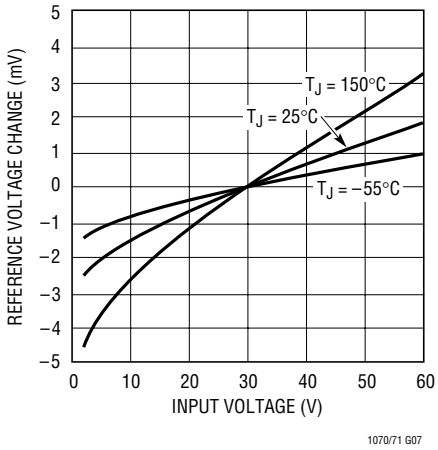

Reference Voltage vs Temperature

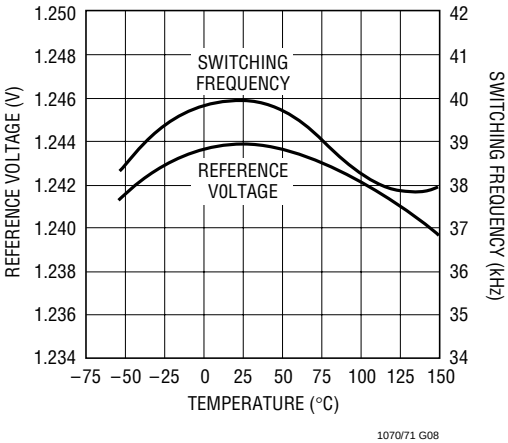

Feedback Bias Current vs Temperature

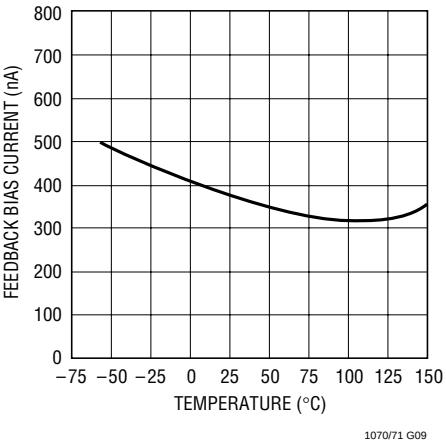

Downloaded from Arrow.com.

TYPICAL PERFORMANCE CHARACTERISTICS

Driver Current* vs Switch Current

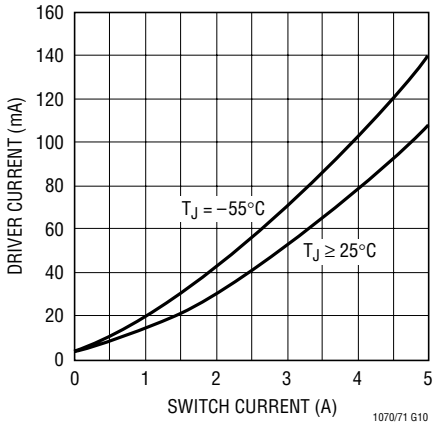

*AVERAGE LT1070 POWER SUPPLY CURRENT IS FOUND BY MULTIPLYING DRIVER CURRENT BY DUTY CYCLE, THEN ADDING QUIESCENT CURRENT

Supply Current vs Input Voltage*

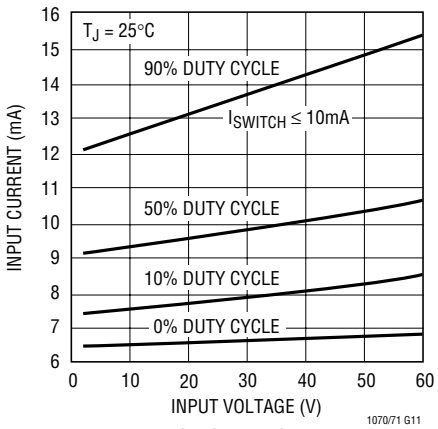

*UNDER VERY LOW OUTPUT CURRENT CONDITIONS, DUTY CYCLE FOR MOST CIRCUITS WILL APPROACH 10% OR LESS

Supply Current vs Supply Voltage (Shutdown Mode)

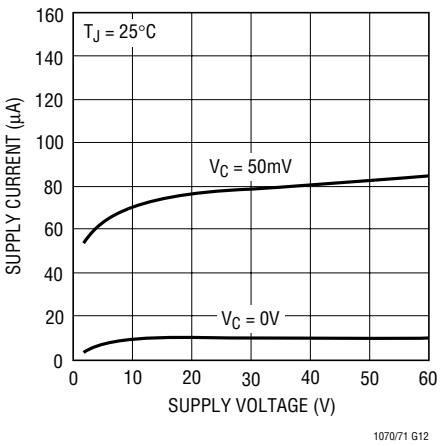

Normal/Flyback Mode Threshold on Feedback Pin

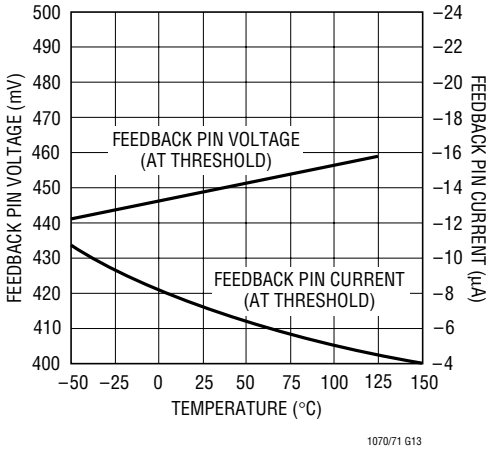

Shutdown Mode Supply Current

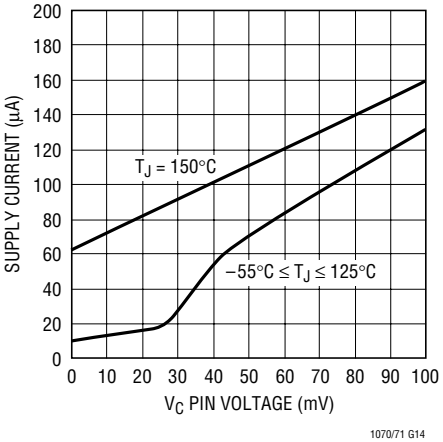

Error Amplifier Transconductance

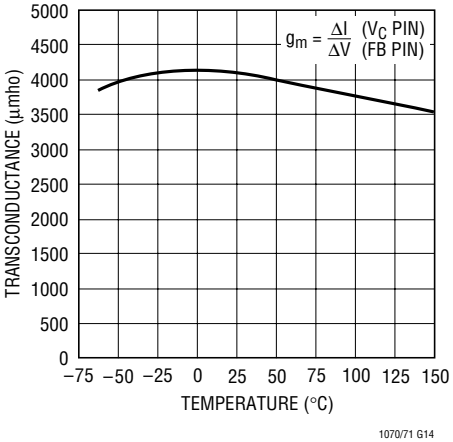

Shutdown Thresholds

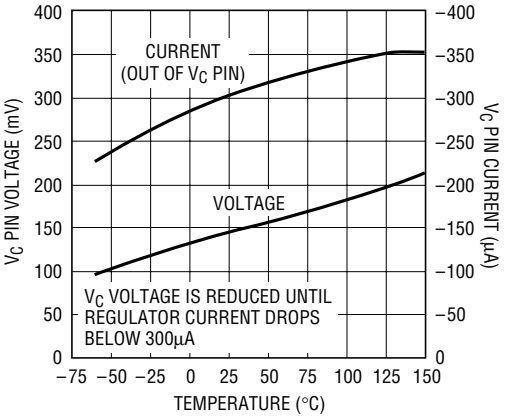

Idle Supply Current vs Temperature

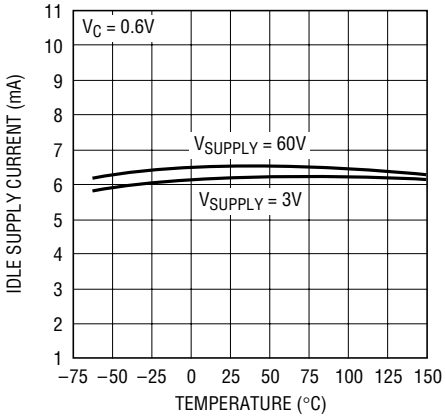

Feedback Pin Clamp Voltage

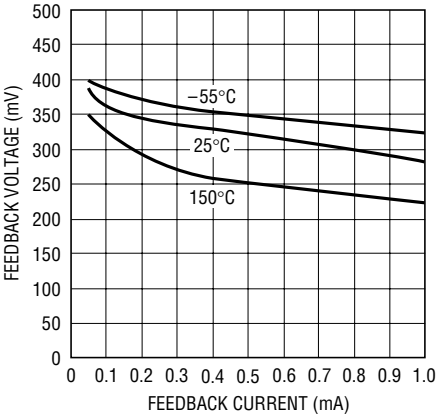

Downloaded from Arrow.com.

TYPICAL PERFORMANCE CHARACTERISTICS

Switch "Off" Characteristics

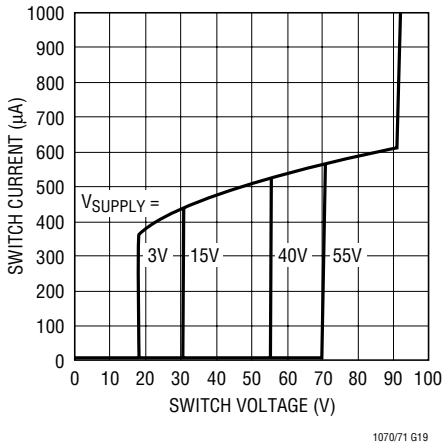

V_C Pin Characteristics

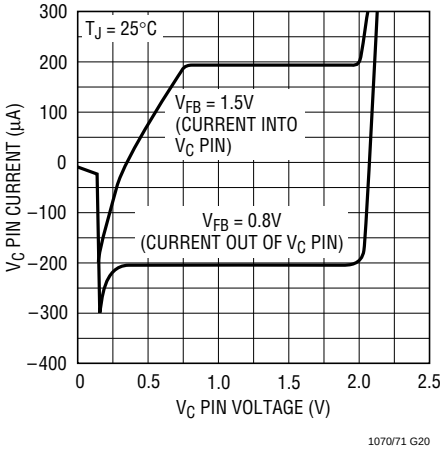

Transconductance of Error Amplifier

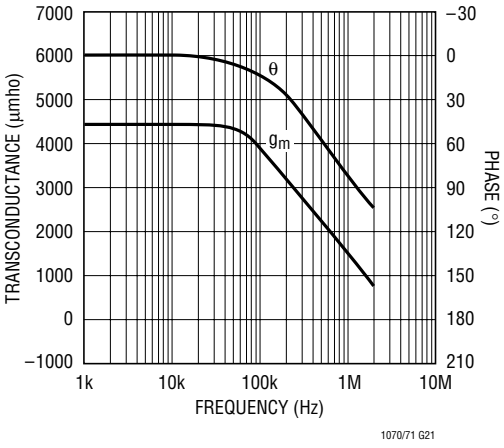

BLOCK DIAGRAM

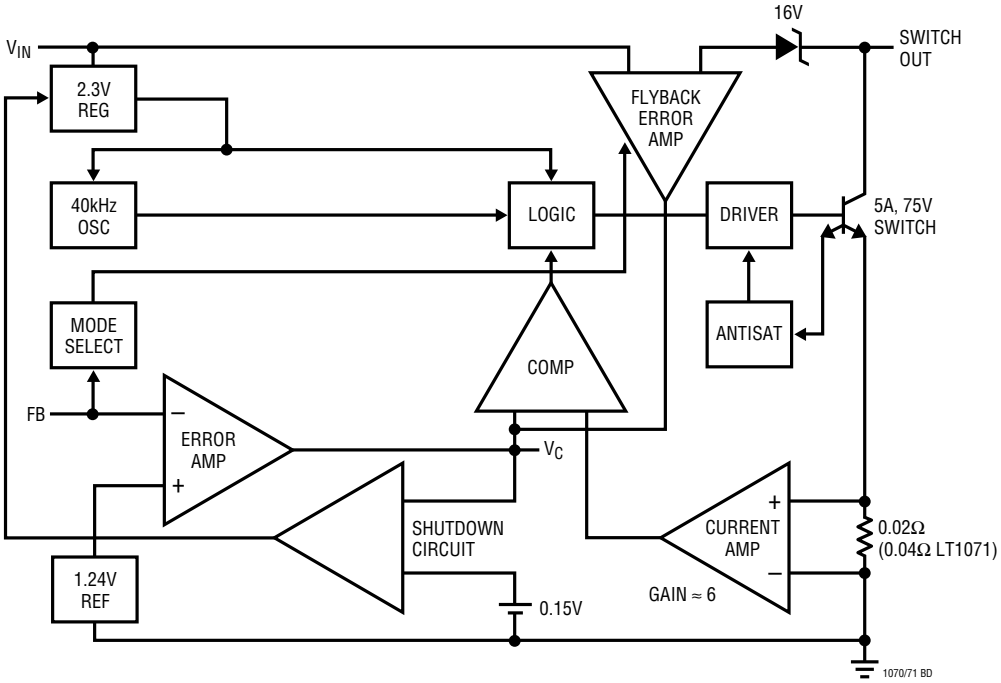

OPERATION

The LT1070/LT1071 is a current mode switcher. This means that switch duty cycle is directly controlled by switch current rather than by output voltage. Referring to the Block Diagram, the switch is turned "on" at the start of each oscillator cycle. It is turned "off" when switch current reaches a predetermined level. Control of output voltage is obtained by using the output of a voltage sensing error amplifier to set current trip level. This technique has several advantages. First, it has immediate response to input voltage variations, unlike ordinary switchers which have notoriously poor line transient response. Second, it reduces the 90° phase shift at

Downloaded from Arrow.com.

OPERATION

midfrequencies in the energy storage inductor. This greatly simplifies closed-loop frequency compensation under widely varying input voltage or output load conditions. Finally, it allows simple pulse-by-pulse current limiting to provide maximum switch protection under output overload or short-circuit conditions. A low dropout internal regulator provides a 2.3V supply for all internal circuitry of the LT1070/LT1071. This low dropout design allows input voltage to vary from 3V to 60V with virtually no change in device performance. A 40kHz oscillator is the basic clock for all internal timing. It turns "on" the output switch via the logic and driver circuitry. Special adaptive antisat circuitry detects onset of saturation in the power switch and adjusts driver current instantaneously to limit switch saturation. This minimizes driver dissipation and provides very rapid turn-off of the switch.

A 1.2V bandgap reference biases the positive input of the error amplifier. The negative input is brought out for output voltage sensing. This feedback pin has a second function; when pulled low with an external resistor, it programs the LT1070/LT1071 to disconnect the main error amplifier output and connects the output of the flyback amplifier to the comparator input. The LT1070/LT1071 will then regulate the value of the flyback pulse with respect to the supply voltage. This flyback pulse is directly proportional to output voltage in the traditional transformer coupled flyback topology regulator. By regulating the amplitude of the flyback pulse, the output voltage can be regulated with no direct connection between input and output. The output is fully floating up to the breakdown voltage of the transformer windings. Multiple floating outputs are easily obtained with additional windings. A special delay network inside the LT1070/LT1071 ignores the leakage inductance spike at the leading edge of the flyback pulse to improve output regulation.

The error signal developed at the comparator input is brought out externally. This pin (V_C) has four different functions. It is used for frequency compensation, current limit adjustment, soft starting and total regulator shutdown. During normal regulator operation this pin sits at a voltage between 0.9V (low output current) and 2.0V (high output current). The error amplifiers are current output (g_m) types, so this voltage can be externally clamped for adjusting current limit. Likewise, a capacitor coupled external clamp will provide soft start. Switch duty cycle goes to zero if the V_C pin is pulled to ground through a diode, placing the LT1070/LT1071 in an idle mode. Pulling the V_C pin below 0.15V causes total regulator shutdown, with only 50μA supply current for shutdown circuitry biasing. See AN19 for full application details.

TYPICAL APPLICATIONS (Note that maximum output currents are divided by 2 for the LT1071)

Driving High Voltage FET (for Off-Line Applications, See AN25)

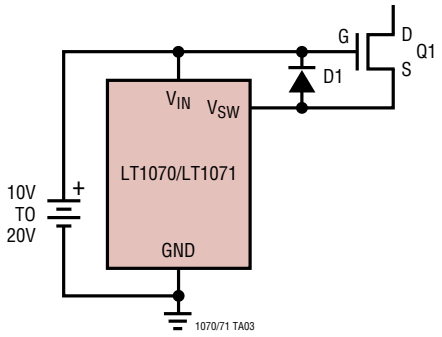

Driving High Voltage NPN

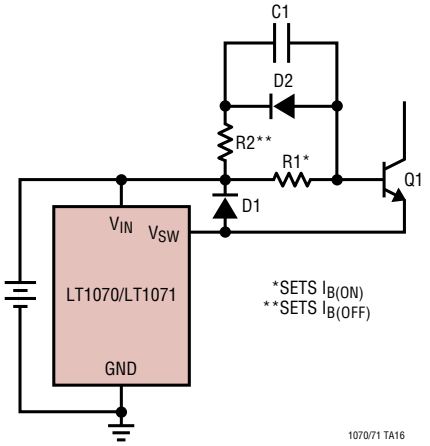

Downloaded from Arrow.com.

TYPICAL APPLICATIONS (Note that maximum output currents are divided by 2 for the LT1071)

Negative Buck Converter

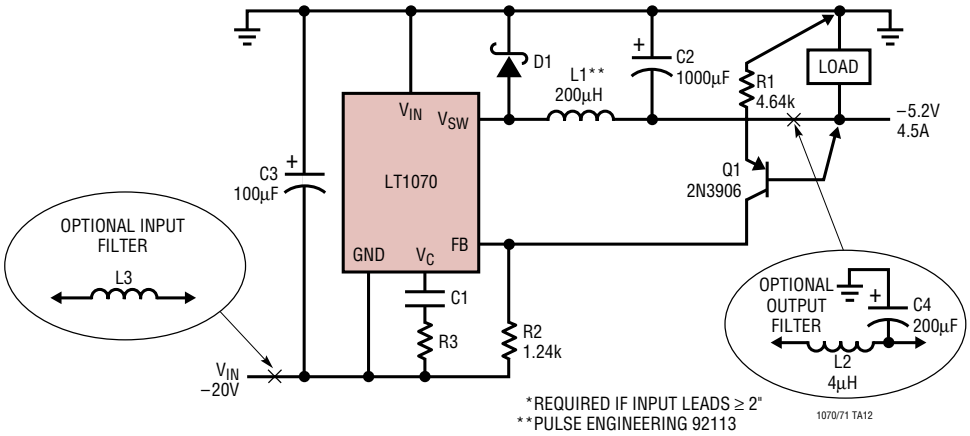

Positive Buck Converter

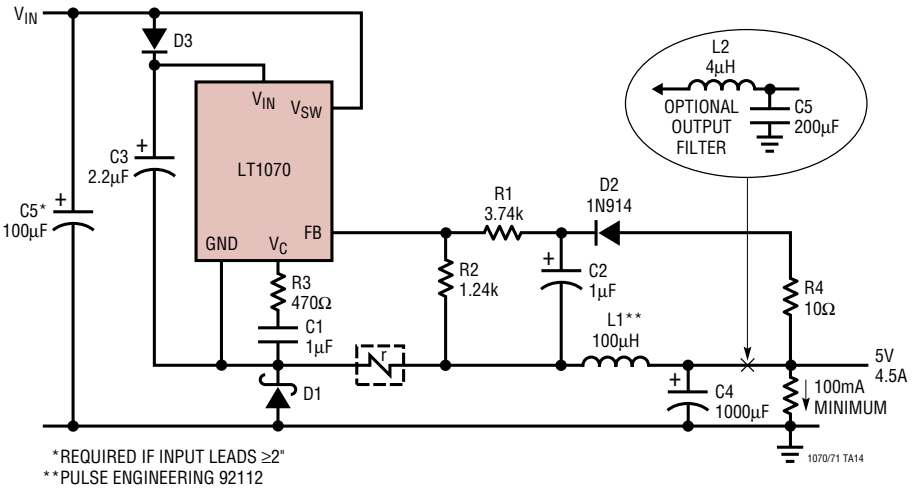

Negative Current Boosted Buck Converter

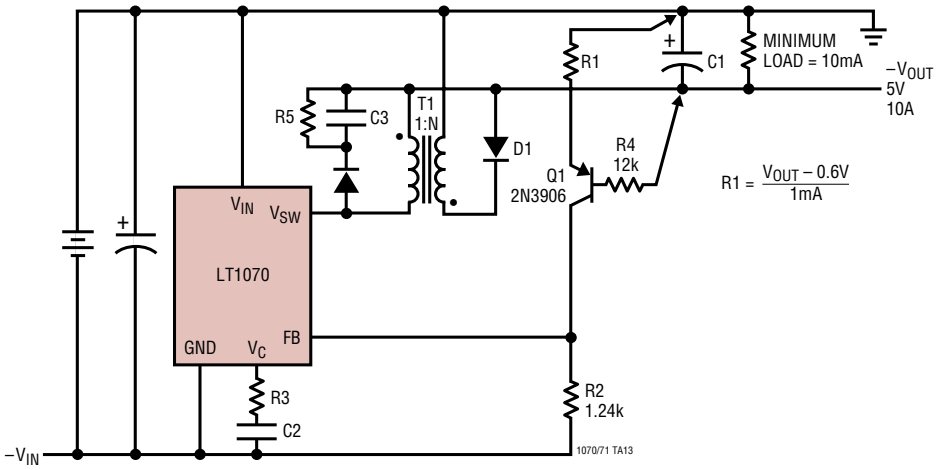

Downloaded from Arrow.com.

TYPICAL APPLICATIONS (Note that maximum output currents are divided by 2 for the LT1071)

Positive Current Boosted Buck Converter

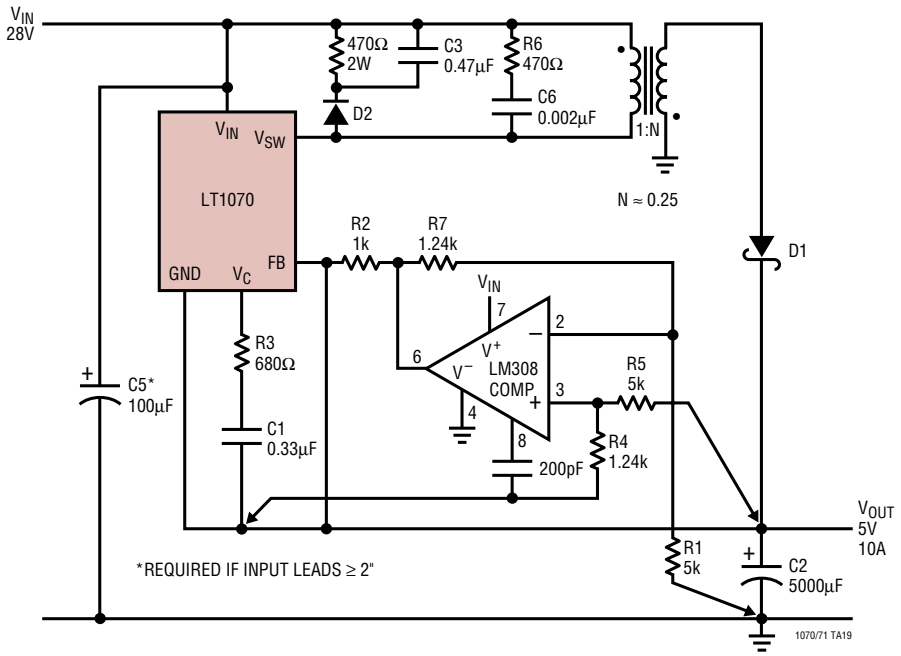

Negative to Positive Buck/Boost Converter

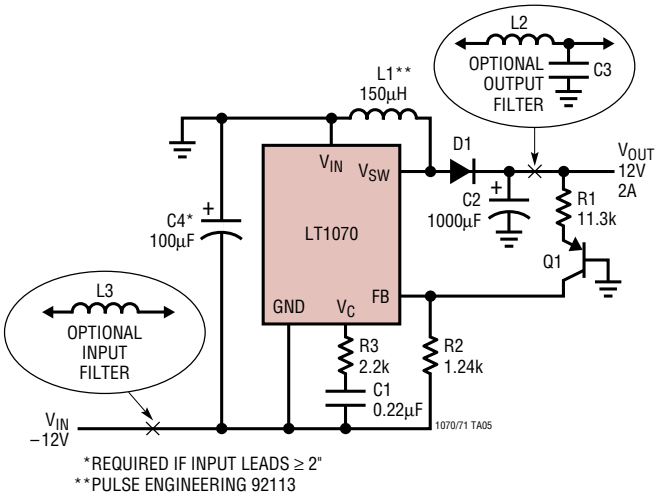

Positive to Negative Buck/Boost Converter

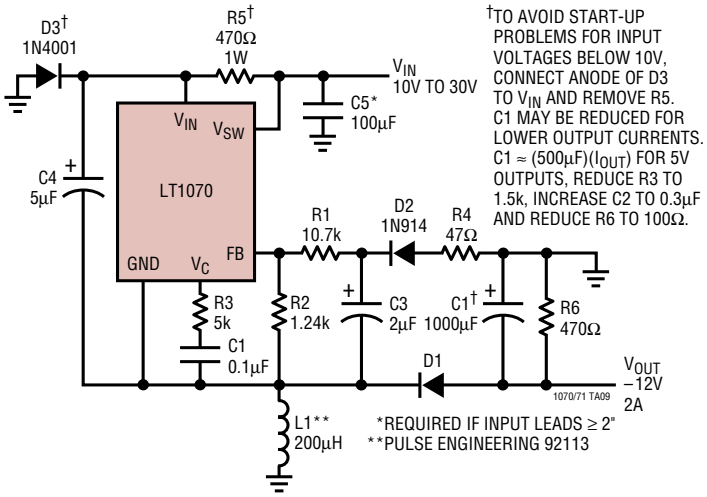

†TO AVOID START-UP PROBLEMS FOR INPUT VOLTAGES BELOW 10V, CONNECT ANODE OF D3 TO V_{IN} AND REMOVE R5. C1 MAY BE REDUCED FOR LOWER OUTPUT CURRENTS. C1 ≈ (500µF)(I_{OUT}) FOR 5V OUTPUTS, REDUCE R3 TO 1.5k, INCREASE C2 TO 0.3µF AND REDUCE R6 TO 100Ω.

Downloaded from Arrow.com.

TYPICAL APPLICATIONS (Note that maximum output currents are divided by 2 for the LT1071)

Voltage Boosted Boost Converter

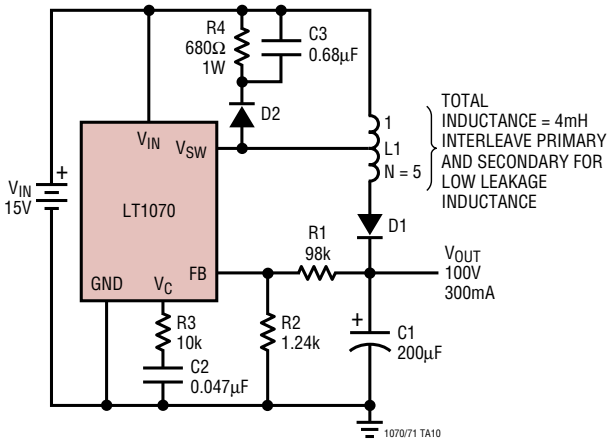

Current Boosted Boost Converter

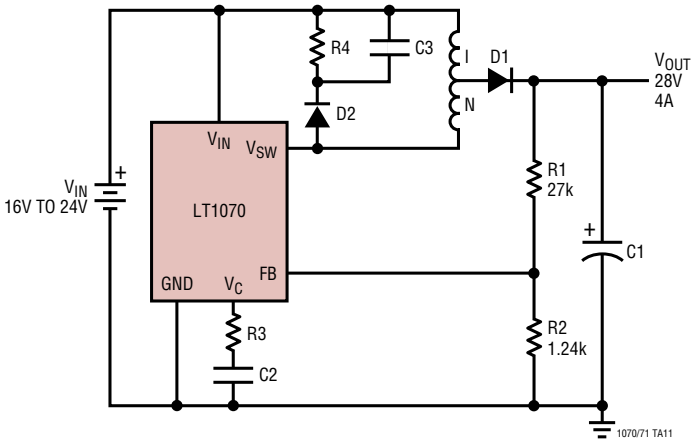

Negative Boost Regulator

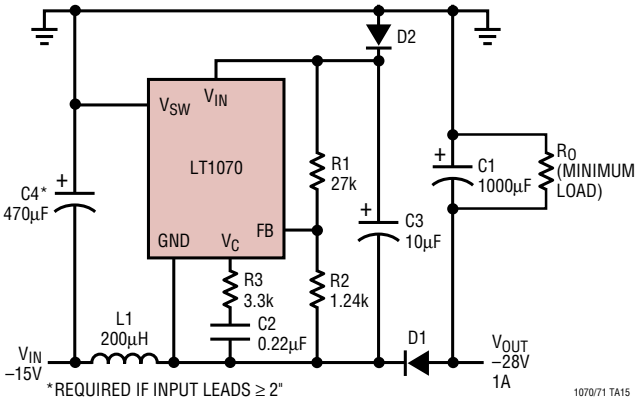

Negative Input/Negative Output Flyback Converter

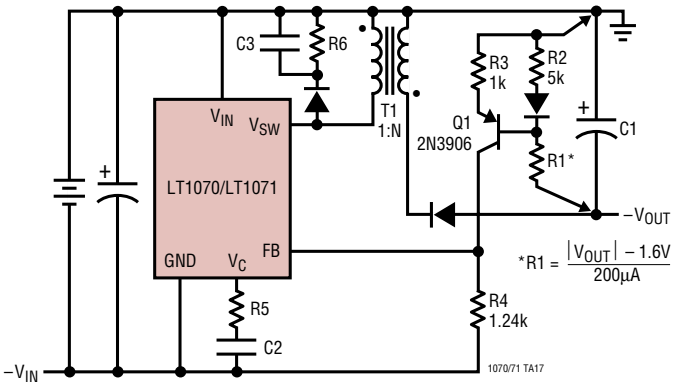

External Current Limit

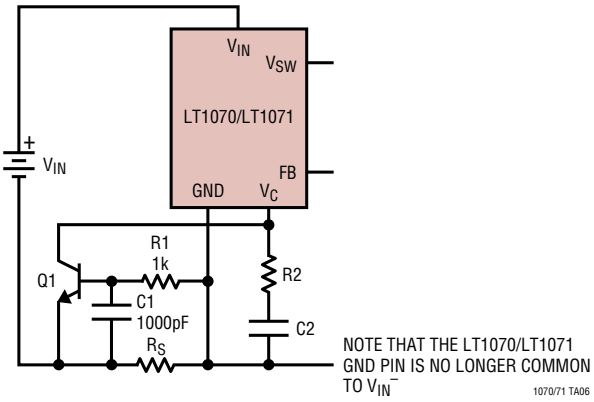

External Current Limit

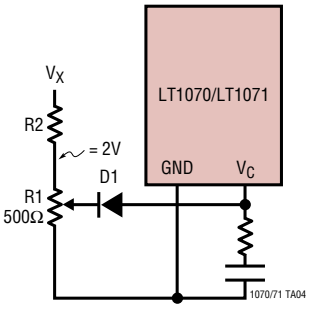

Downloaded from Arrow.com.

TYPICAL APPLICATIONS (Note that maximum output currents are divided by 2 for the LT1071)

Flyback Converter

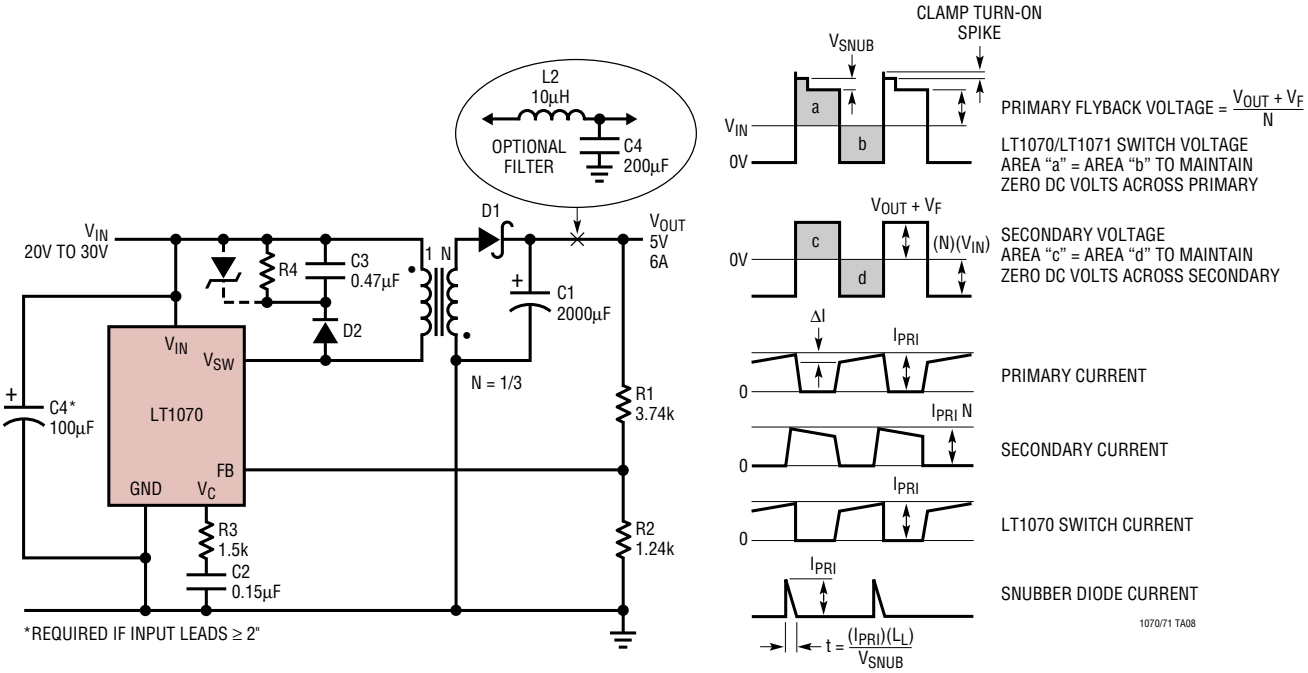

PACKAGE DESCRIPTION

K Package
4-Lead TO-3 Metal Can
(Reference LTC DWG # 05-08-1311)

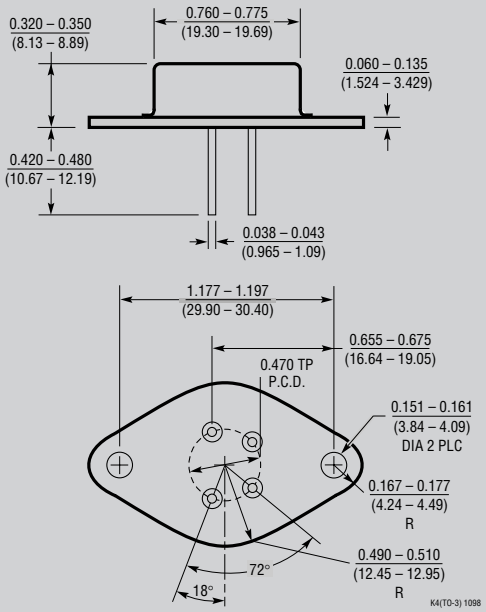

OBSOLETE PACKAGE

T Package
5-Lead Plastic TO-220 (Standard)
(Reference LTC DWG # 05-08-1421)

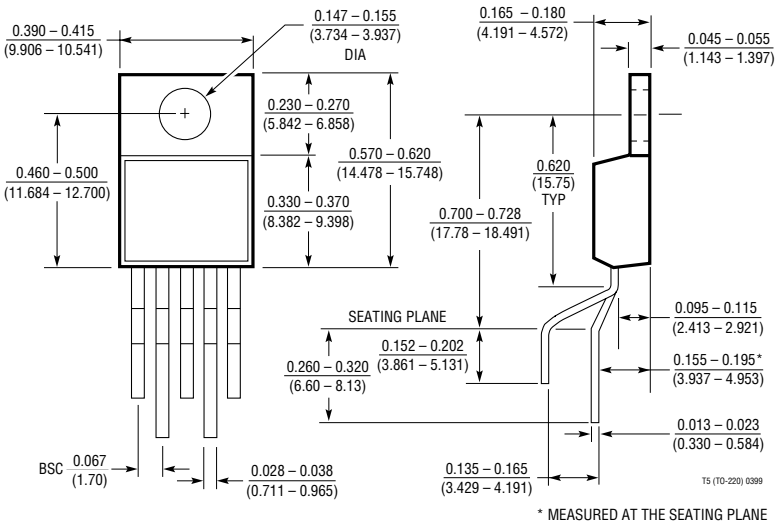

Information furnished by Linear Technology Corporation is believed to be accurate and reliable. However, no responsibility is assumed for its use. Linear Technology Corporation makes no representation that the interconnection of its circuits as described herein will not infringe on existing patent rights.

Downloaded from Arrow.com.

TYPICAL APPLICATIONS (Note that maximum output currents are divided by 2 for the LT1071)

Totally Isolated Converter

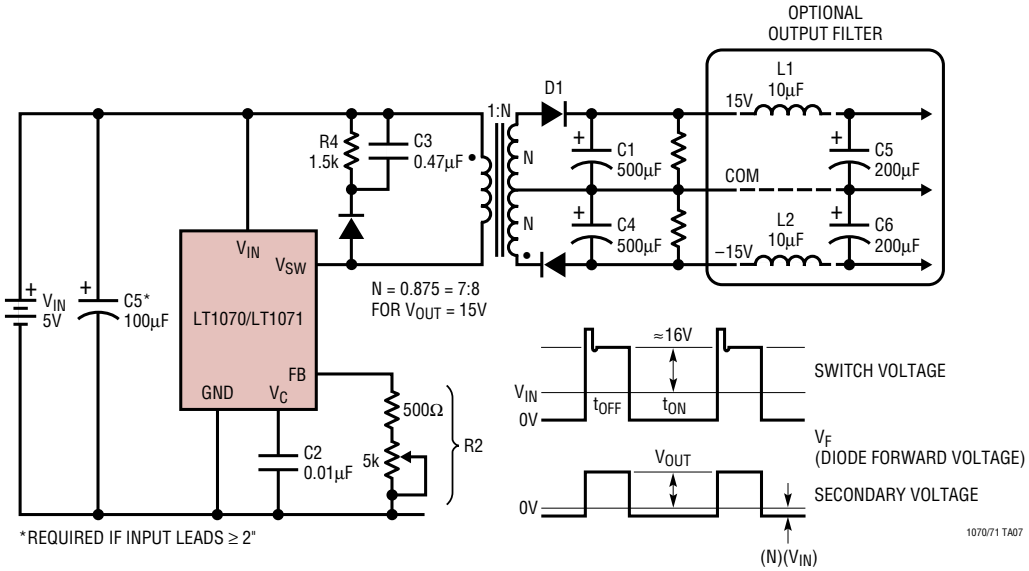

Forward Converter

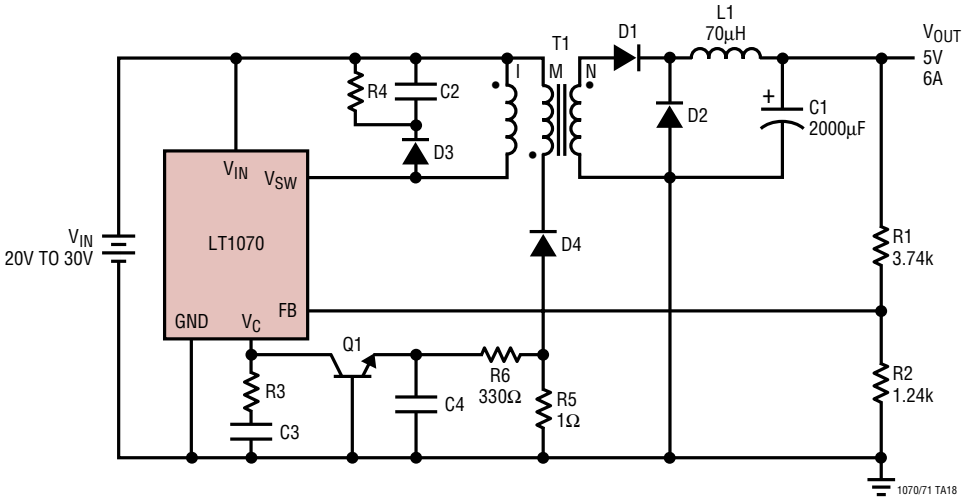

RELATED PARTS

PART NUMBER	DESCRIPTION	COMMENTS
LT1074/LT1076	High Voltage Switching Regulators	40V Input (60V for HV Versions), 100kHz, 5A and 2A
LT1170/LT1171/ LT1172	100kHz High Efficiency Switching Regulators	40V Input (65V for HV Versions), 5A/2.5A/1.25A Internal Switch
LT1370/LT1371	500kHz High Efficiency Switching Regulators	35V, 6A/3A Internal Switch
LT1374/LT1376	100kHz High Efficiency Switching Regulators	25V Input, 4.5A/1.5A Internal Switch
LT1765	1.25MHz, 3A, Step-Down Regulator	25V Input, TSSOP-16E, SO8 Package

Linear Technology Corporation
1630 McCarthy Blvd., Milpitas, CA 95035-7417
(408) 432-1900 • FAX: (408) 434-0507 • www.linear.com

LT/CPI 0202 1.5K REV E • PRINTED IN USA

© LINEAR TECHNOLOGY CORPORATION 1989

Downloaded from Arrow.com.