THIS DRAWING IS UNPUBLISHED. RELEASED FOR PUBLICATION -.-. .
© COPYRIGHT - By - ALL RIGHTS RESERVED.

REVISIONS

P	LTR	DESCRIPTION	DATE	DWN	APVD
	-	SEE SHEET 1	-	-	-

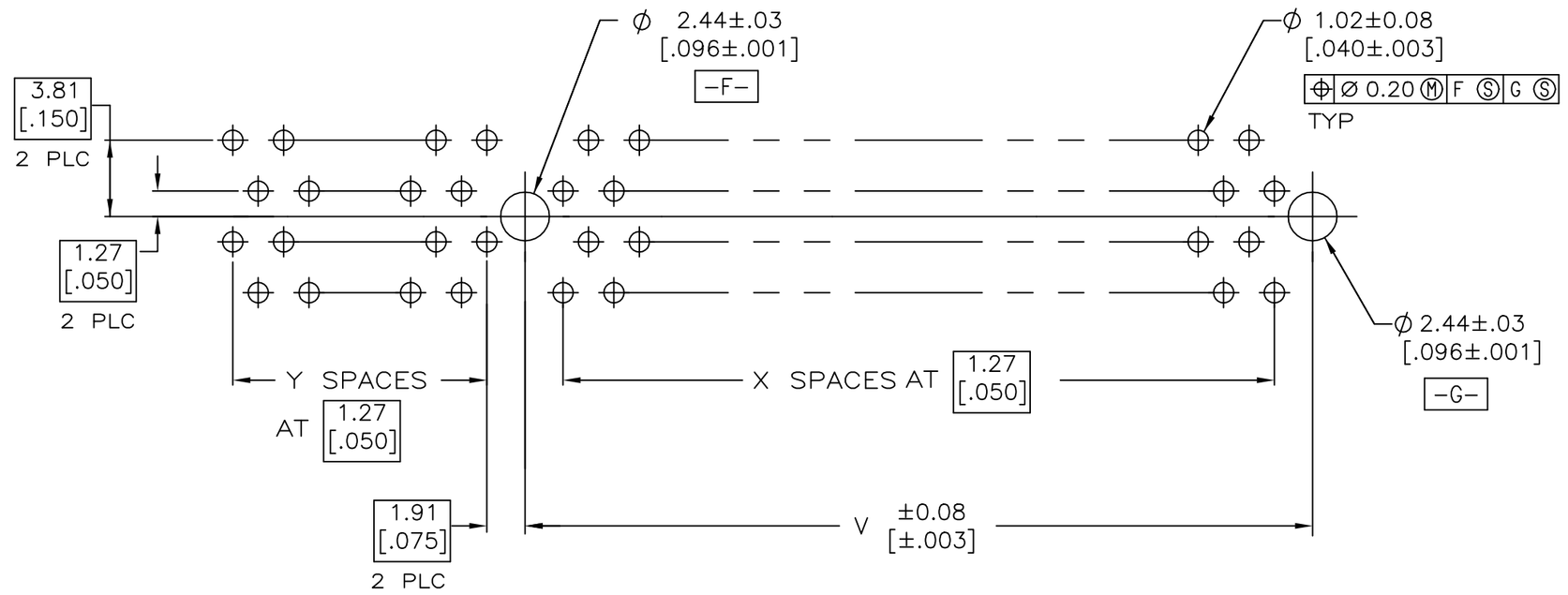

RECOMMENDED CONNECTOR MOUNTING HOLE PATTERN A
(CONNECTOR SIDE SHOWN)

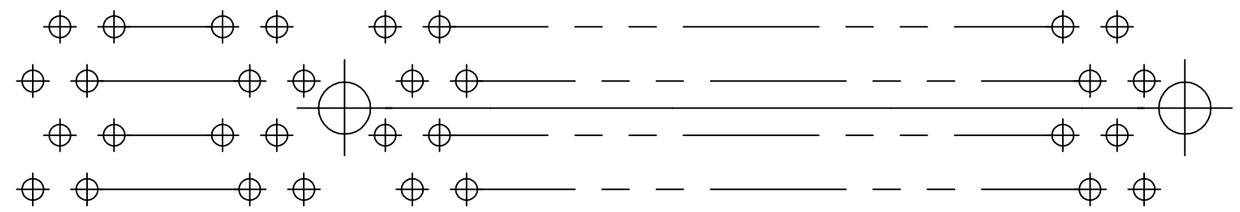

RECOMMENDED CONNECTOR MOUNTING HOLE PATTERN B
(CONNECTOR SIDE SHOWN)

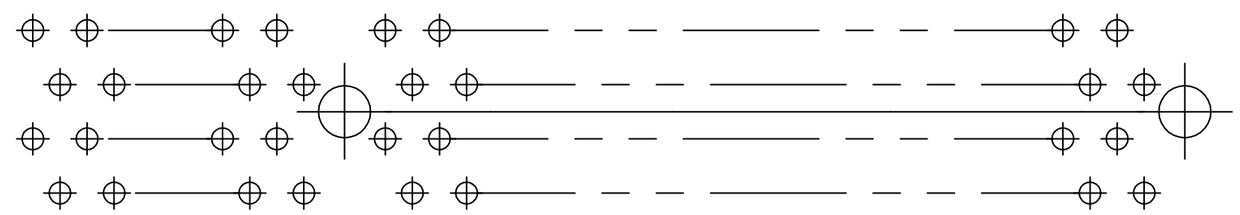

RECOMMENDED CONNECTOR MOUNTING HOLE PATTERN C

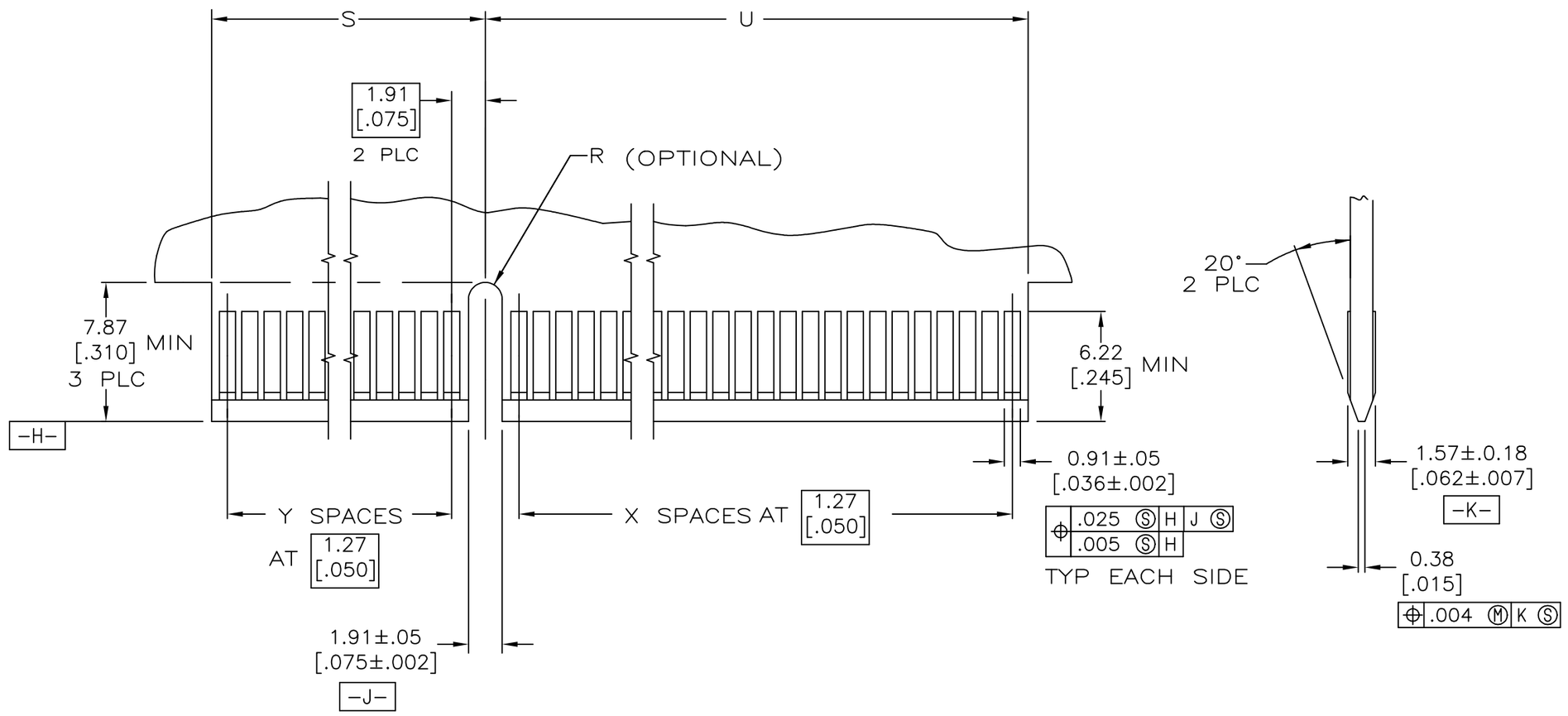

RECOMMENDED MATING BOARD EDGE CONFIGURATION
(CONNECTOR SIDE SHOWN)

THIS DRAWING IS A CONTROLLED DOCUMENT.

DIMENSIONS: mm

TOLERANCES UNLESS OTHERWISE SPECIFIED:
0 PLC ± -
1 PLC ± -
2 PLC ± -
3 PLC ± -
4 PLC ± -
ANGLES ± 2°

MATERIAL: SEE SHEET 1
FINISH: SEE SHEET 1

DWN AL FRANTUM 24 JAN 05
CHK AL FRANTUM 24 JAN 05
APVD

TE Connectivity Ltd.

NAME: CONNECTOR ASSEMBLY, DUAL POSITION, .050 SEERIES

PRODUCT SPEC 108-14034
APPLICATION SPEC 114-26012
WEIGHT -

SIZE	CAGE CODE	DRAWING NO	RESTRICTED TO
A1	00779	C-5650090	-

CUSTOMER DRAWING | SCALE 5:1 | SHEET 2 OF 2 | REV R

4805 (1/15)

Downloaded from Arrow.com.