Functional Block Diagram

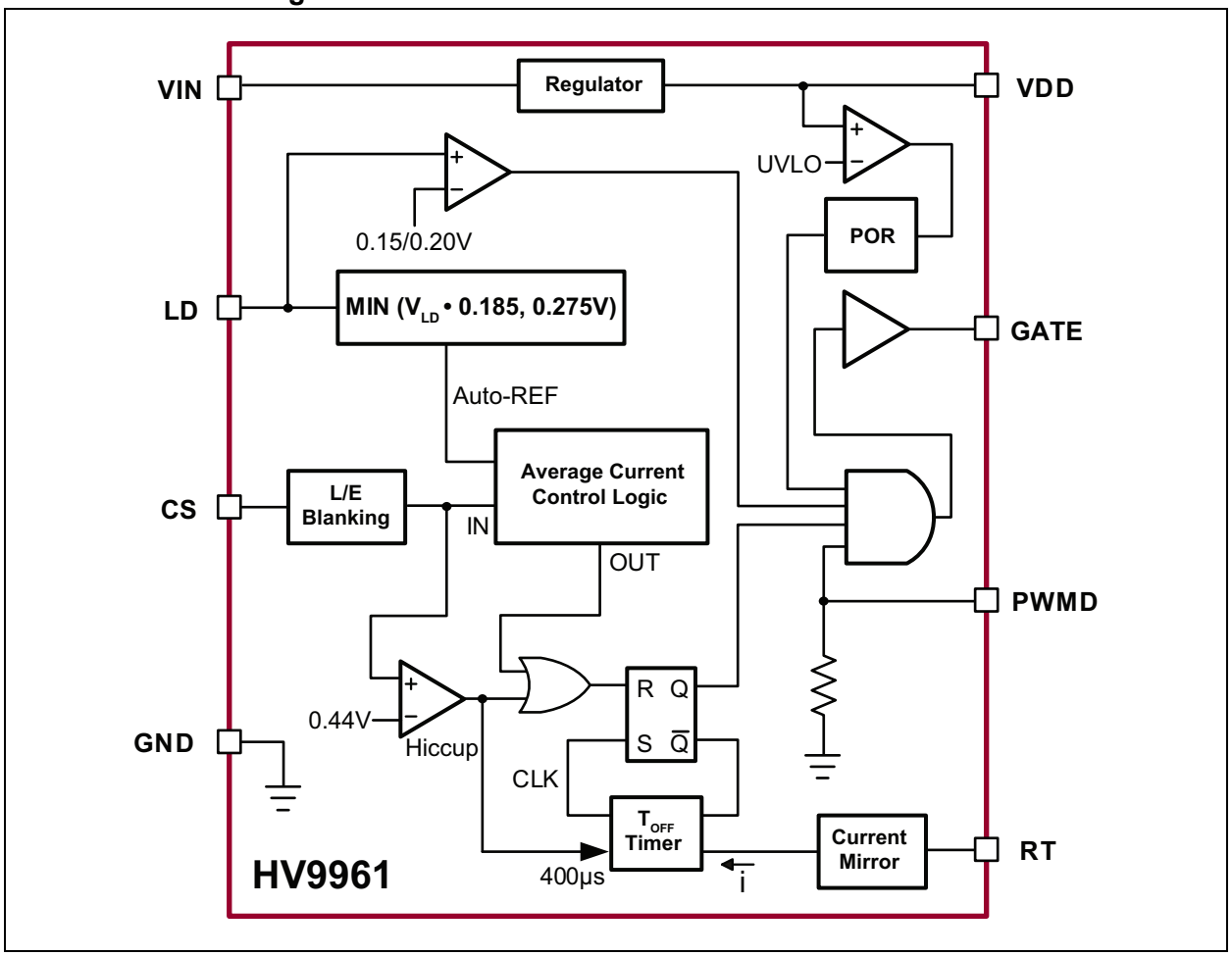

© 2017 Microchip Technology Inc.

Downloaded from Arrow.com.

Typical Application Circuit

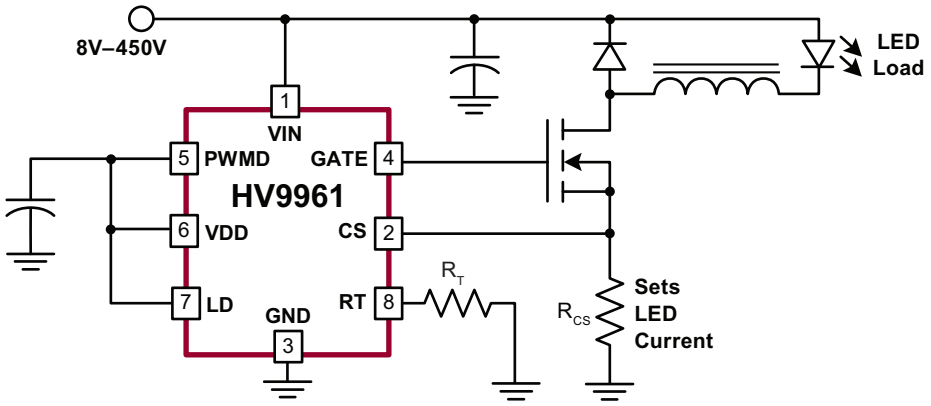

Downloaded from Arrow.com.

1.0 ELECTRICAL CHARACTERISTICS

Absolute Maximum Ratings†

V_{IN} to GND ..... –0.5V to +470V
V_{DD} to GND ..... +12V
CS, LD, PWMD, Gate, RT to GND ..... –0.3V to V_{DD}+0.3V
Junction Temperature, T_J ..... –40°C to +150°C
Storage Temperature, T_S ..... –65°C to +150°C
Continuous Power Dissipation (T_A = +25°C):
8-lead SOIC ..... 650 mW
16-lead SOIC ..... 1000 mW

† Notice: Stresses above those listed under "Absolute Maximum Ratings" may cause permanent damage to the device. This is a stress rating only, and functional operation of the device at those or any other conditions above those indicated in the operational sections of this specification is not intended. Exposure to maximum rating conditions for extended periods may affect device reliability.

ELECTRICAL CHARACTERISTICS

Electrical Specifications: T_A = 25°C, V_{IN} = 12V, V_{LD} = V_{DD}, and V_{PWMD} = V_{DD} unless otherwise specified.

Parameter	Sym.	Min.	Typ.	Max.	Unit	Conditions
INPUT						
Input DC Supply Voltage Range	V_{INDC}	8	—	450	V	DC input voltage (**Note 1** and **Note 2**)
Shutdown Mode Supply Current	I_{INSD}	—	0.5	1	mA	Pin PWMD connected to GND (**Note 2**)
INTERNAL REGULATOR						
Internally Regulated Voltage	V_{DD}	7.25	7.5	7.75	V	V_{IN} = 8V, $I_{DD(EXT)}$ = 0 mA, 500 pF at gate, R_T = 226 kΩ
Line Regulation of V_{DD}	$\Delta V_{DD, line}$	0	—	1	V	V_{IN} = 8V–450V, $I_{DD(EXT)}$ = 0 mA, 500 pF at gate, R_T = 226 kΩ
Load Regulation of V_{DD}	$\Delta V_{DD, load}$	0	—	100	mV	$I_{DD(EXT)}$ = 0 mA–1 mA, 500 pF at gate, R_T = 226 kΩ
V_{DD} Undervoltage Lockout Upper Threshold	V_{UVLO}	6.45	6.7	6.95	V	V_{IN} rising (**Note 2**)
V_{DD} Undervoltage Lockout Hysteresis	ΔV_{UVLO}	—	500	—	mV	V_{IN} falling
Maximum Input Current (Limited by UVLO)	$I_{IN, MAX}$	3.5	—	—	mA	V_{IN} = 8V, T_A = 25°C (**Note 3**)
		1.5	—	—		V_{IN} = 8V, T_A = 125°C (**Note 3**)
PWM DIMMING						
PWMD Input Low Voltage	$V_{PWMD(LO)}$	—	—	0.8	V	V_{IN} = 8V–450V (**Note 2**)
PWMD Input High Voltage	$V_{PWMD(HI)}$	2.2	—	—	V	V_{IN} = 8V–450V (**Note 2**)
PWMD Pull-down Resistance	R_{PWMD}	50	100	150	kΩ	V_{PWMD} = 5V
AVERAGE-CURRENT SENSE LOGIC						
Current Sense Reference Voltage	V_{CST}	268	275	286	mV	V_{LD} = 1.5V
LD-to-CS Voltage Ratio	$A_{V(LD)}$	0.182	0.185	0.188	—	V_{LD} = 1.2V
LD-to-CS Voltage Offset	A_V x $V_{LD(OFFSET)}$	0	—	10	mV	Offset = V_{CS}– $A_{V(LD)}$ x V_{LD}, V_{LD} = 1.2V

Note 1: Also limited by package power dissipation limit, whichever is lower
2: Denotes specifications which apply over the full operating ambient temperature range of –40°C < T_A < +125°C
3: Specification is obtained by characterization and is not 100% tested.

© 2017 Microchip Technology Inc.

Downloaded from Arrow.com.

ELECTRICAL CHARACTERISTICS (CONTINUED)

Electrical Specifications: T_A = 25°C, V_{IN} = 12V, V_{LD} = V_{DD}, and V_{PWMD} = V_{DD} unless otherwise specified.						
Parameter	**Sym.**	**Min.**	**Typ.**	**Max.**	**Unit**	**Conditions**
CS Threshold Temperature Regulation	$\Delta V_{CST(TEMP)}$	—	—	5	mV	(**Note 2**)
LD Input Shutdown Threshold Voltage	$V_{LD(OFF)}$	—	150	—	mV	V_{LD} falling
LD Input Enable Threshold Voltage	$V_{LD(EN)}$	—	200	—	mV	V_{LD} rising
Current Sense Blanking Interval	T_{BLANK}	150	—	320	ns	(**Note 2**)
Minimum On-time	$T_{ON(MIN)}$	—	—	1000	ns	V_{CS} = V_{CST} + 30 mV
Maximum Steady-state Duty Cycle	D_{MAX}	75	—	—	%	Reduction in output LED current may occur beyond this duty cycle
SHORT-CIRCUIT PROTECTION						
Hiccup Threshold Voltage	V_{CSH}	410	440	470	mV	
Current Limit Delay CS-to-Gate	T_{DELAY}	—	—	150	ns	V_{CS} = V_{CSH} + 30 mV
Short-circuit Hiccup Time	T_{HICCUP}	350	400	550	µs	
Minimum On-time (Short-circuit)	$T_{ON(MIN),SC}$	—	—	430	ns	V_{CS} = V_{DD}
T_{OFF} TIMER						
Off-time	T_{OFF}	32	40	48	µs	R_T = 1 MΩ
		8	10	12		R_T = 226 kΩ
GATE DRIVER						
Gate Sourcing Current	I_{SOURCE}	0.165	—	—	A	V_{GATE} = 0V, V_{DD} = 7.5V
Gate Sinking Current	I_{SINK}	0.165	—	—	A	V_{GATE} = V_{DD}, V_{DD} = 7.5V
Gate Output Rise Time	t_r	—	30	50	ns	C_{GATE} = 500 pF, V_{DD} = 7.5V
Gate Output Fall Time	t_f	—	30	50	ns	C_{GATE} = 500 pF, V_{DD} = 7.5V

Note 1: Also limited by package power dissipation limit, whichever is lower

2: Denotes specifications which apply over the full operating ambient temperature range of –40°C < T_A < +125°C

3: Specification is obtained by characterization and is not 100% tested.

TEMPERATURE SPECIFICATIONS

Parameter	**Sym.**	**Min.**	**Typ.**	**Max.**	**Unit**	**Conditions**
TEMPERATURE RANGES						
Operating Ambient Temperature	T_A	–40	—	+125	°C	
Maximum Junction Temperature	$T_{J(MAX)}$	—	—	+150	°C	
Storage Temperature	T_S	–65	—	+150	°C	
PACKAGE THERMAL RESISTANCE						
8-lead SOIC	θ_{JA}	—	101	—	°C/W	
16-lead SOIC	θ_{JA}	—	83	—	°C/W	

© 2017 Microchip Technology Inc.

Downloaded from Arrow.com.

2.0 PIN DESCRIPTION

The details on the pins of HV9961 are listed on Table 2-1. Refer to **Package Types** for the location of pins.

TABLE 2-1: PIN FUNCTION TABLE

Pin Number		Pin Name	Description
8-lead SOIC	16-lead SOIC		
1	1	VIN	This pin is the input of an 8V–450V linear regulator.
2	4	CS	This pin is the current sense pin used to sense the FET current with an external sense resistor.
3	5	GND	Ground return for all internal circuitry. This pin must be electrically connected to the ground of the power train.
4	8	Gate	This pin is the output of gate driver for driving an external N-channel power MOSFET.
5	9	PWMD	This is the PWM dimming input of the IC. When this pin is pulled to GND, the gate driver is turned off. When the pin is pulled high, the gate driver operates normally.
6	12	V_{DD}	This is the power supply pin for all internal circuits. It must be bypassed with a low ESR capacitor to GND (at least 0.1 µF).
7	13	LD	This pin is the linear dimming input, and it sets the current sense threshold as long as the voltage at this pin is less than 1.5V. If voltage at LD falls below 150 mV, the gate output is disabled. The gate signal recovers at 200 mV at LD.
8	14	RT	A resistor connected between this pin and GND programs the gate off-time.
—	2, 3, 6, 7, 10, 11, 15 and16	NC	No connection

© 2017 Microchip Technology Inc.

Downloaded from Arrow.com.

3.0 APPLICATION INFORMATION

3.1 General Description

Peak current control (as in HV9910B) is the simplest and the most economical way to regulate a buck converter's output current. However, it suffers accuracy and regulation problems that arise from peak-to-average current error, contributed by the current ripple in the output inductor and the propagation delay in the current sense comparator. The full inductor current signal is unavailable for direct switch current sensing across the sense resistor at the ground path in this low-side switch buck converter when the control switch is at the ground potential because the switch is turned off. While it is very simple to detect the peak current in the switch, controlling the average inductor current is usually implemented by level translating the sense signal from $+V_{IN}$. Although this is practical for a relatively low-input voltage, V_{IN}, this type of average-current control may become excessively complex and expensive in the offline AC or other high-voltage DC applications.

The HV9961 uses a proprietary control scheme that allows fast and accurate control of the average current in the buck inductor by sensing the switch current only. No compensation of the current control loop is required. The output LED current's response to PWMD input is similar to that of the HV9910B. The effect of inductor current ripple amplitude on this control scheme is insignificant. Therefore, the LED current is independent of the variation in inductance, switching frequency or output voltage. Constant off-time control of the buck converter is used for stability and improving the LED current regulation over a wide range of input voltages. Unlike HV9910B, the HV9961 does not support Constant Frequency mode.

3.2 Off Timer

The timing resistor connected between RT and GND determines the off-time of the gate driver. Wiring this resistor between RT and Gate as with HV9910B is no longer supported. Refer to Equation 3-1 for the computation of the gate output's off-time.

EQUATION 3-1:

$$T_{OFF}(\mu s) = \frac{R_T(k\Omega)}{25} + 0.3$$

within the range of 30 kΩ ≤ R_T ≤ 1 MΩ

3.3 Average-Current Control Feedback and Output Short-circuit Protection

The current through the switching Metal-oxide Semiconductor Field-effect Transistor (MOSFET) source is averaged and used to give constant-current feedback. This current is detected with a sense resistor at the CS pin. The feedback operates in a fast Open-loop mode. No compensation is required. Output current is programmed as seen in Equation 3-2.

EQUATION 3-2:

$$I_{LED} = \frac{0.275V}{R_{CS}}$$

When the voltage at the LD input V_{LD} ≥ 1.5V

If the voltage at the LD input is less than 1.5V, the output current is computed as specified in Equation 3-3.

EQUATION 3-3:

$$I_{LED} = \frac{V_{LD} \times 0.185}{R_{CS}}$$

When the voltage at the LD input 0.2V ≤ V_{LD} < 1.5V

The above equations are only valid for continuous conduction of the output inductor. It is good design practice to choose the inductance of the inductor such that the peak-to-peak inductor current is 30% to 40% of the average DC full-load current. Hence, the recommended inductance can be calculated as shown in Equation 3-4.

EQUATION 3-4:

$$L_O = \frac{V_{O(MAX)} \times T_{OFF}}{0.4 \times I_O}$$

The duty-cycle range of the current control feedback is limited to D ≤ 0.75. A reduction in the LED current may occur when the desired LED string voltage V_O is greater than 75% of the input voltage V_{IN} of the HV9961 LED driver.

Reducing the targeted output LED string voltage V_O below $V_{O(MIN)} = V_{IN} \times D_{MIN}$, where D_{MIN} = 1 µs/(T_{OFF} +1 µs), may also result in the loss of regulation of the LED current. This condition, however, causes an increase in the LED current and can potentially trip the short-circuit protection comparator.

The typical output characteristic of the HV9961 LED driver is shown in Figure 3-1. The corresponding HV9910B characteristic is given for the comparison.

Downloaded from Arrow.com.

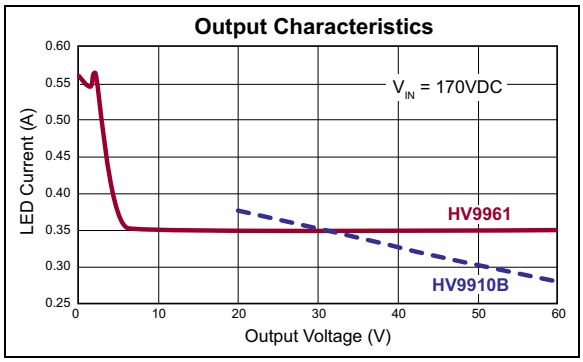

FIGURE 3-1: *Typical Output Characteristic of an HV9961 LED Driver.*

The short-circuit protection comparator trips when the voltage at CS exceeds 0.44V. When this occurs, the short-circuit gate off-time T_{HICCUP} = 400 µs is generated to prevent the staircasing of the inductor current and, potentially, its saturation due to insufficient output voltage. The typical short-circuit inductor current is shown in the waveform of Figure 3-2.

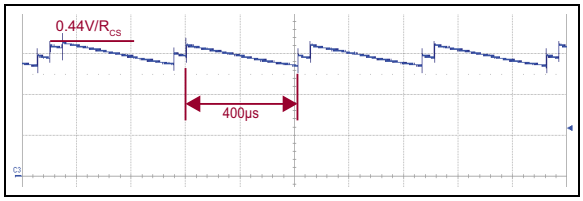

FIGURE 3-2: *Short-circuit Inductor Current.*

A leading-edge blanking delay is provided at CS to prevent false triggering of the current feedback and the short-circuit protection.

3.4 Linear Dimming

When the voltage at LD falls below 1.5V, the internal 275 mV reference to the constant-current feedback becomes overridden by V_{LD} x 0.185. As long as the current in the inductor remains continuous, the LED current is given by Equation 3-3. However, when V_{LD} falls below 150 mV, the gate output becomes disabled. The gate signal recovers when V_{LD} exceeds 200 mV. It is required in some applications to use the same brightness control signal input to shut off the lamp. The typical linear dimming response is shown in Figure 3-3.

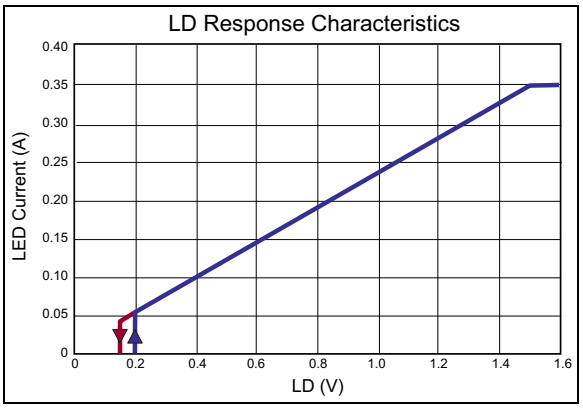

FIGURE 3-3: *Typical Linear Dimming Response of an HV9961 LED Driver.*

The linear dimming input could also be used for “mixed-mode” dimming to expand the dimming ratio. In such case, a pulse-width modulated signal with an amplitude below 1.5V should be applied to LD.

3.5 Input Voltage Regulator

The HV9961 can be powered directly from an 8 V_{DC}–450 V_{DC} supply through its V_{IN} input. When this voltage is applied at the V_{IN} pin, the HV9961 maintains a constant 7.5V level at V_{DD}. This voltage can be used to power the IC and external circuitry connected to V_{DD} within the rated maximum current or within the thermal ratings of the package, whichever limit is lower. The V_{DD} pin must be bypassed by a low ESR capacitor to provide a low-impedance path for the high-frequency current of the gate output. The HV9961 can also be powered through the V_{DD} pin directly with a voltage greater than the internally regulated 7.5V, but less than 12V.

Despite the instantaneous voltage rating of 450V, continuous voltage at V_{IN} is limited by the power dissipation in the package. For example, when HV9961 draws I_{IN} = 2.5 mA from the V_{IN} input, and the 8-pin SOIC package is used, the maximum continuous voltage at V_{IN} is limited to the value shown in Equation 3-5.

EQUATION 3-5:

$$V_{IN(MAX)} = \frac{T_{J(MAX)} - T_A}{R_{\theta,JA} \times I_{IN}}$$

$$= 396V$$

Where:

Ambient temperature: T_A = 25°C
Maximum working junction temperature: $T_{J(MAX)}$ = 125°C
Junction-to-ambient thermal resistance:
$R_{\theta,JA}$ = 101°C/W

© 2017 Microchip Technology Inc.

Downloaded from Arrow.com.

In such cases, when it is needed to operate the HV9961 from a higher voltage, a resistor or a Zener diode can be added in series with the V_{IN} input to divert some of the power loss from the HV9961. In the above example, using a 100V Zener diode will allow the circuit to work up to 490V. The input current drawn from the V_{IN} pin is represented by Equation 3-6.

EQUATION 3-6:

$$I_{IN} \approx 1mA + Q_G \times f_S$$

Where:

f_S = Switching frequency

Q_G = Gate charge of the external FET (obtained from the manufacturer's data sheet)

3.6 Gate Output

The gate output of the HV9961 is used to drive an external MOSFET. It is recommended that the gate charge Q_G of the external MOSFET be less than 25 nC for switching frequencies ≤100 kHz and less than 15 nC for switching frequencies >100 kHz.

3.7 PWM Dimming

Due to the fast open-loop response of the average-current control loop of the HV9961, its PWM dimming performance nearly matches that of the HV9910B. The inductor current waveform comparison is shown in Figure 3-4.

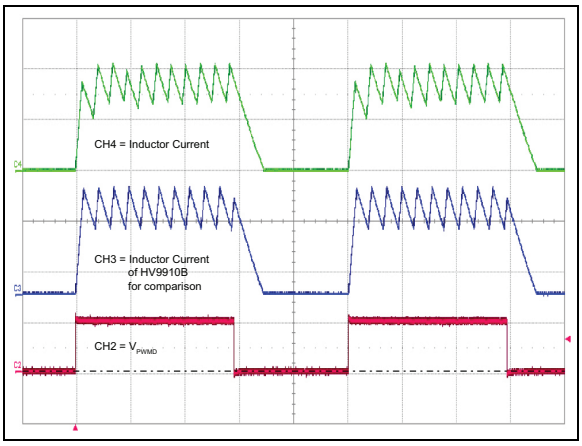

FIGURE 3-4: *Typical PWM Dimming Response of an HV9961 LED Driver.*

The rising and falling edges are limited by the current slew rate in the inductor. The first switching cycle is terminated upon reaching the 275 mV or V_{LD} x 0.185 level at CS. The circuit is further reaching its steady-state within 3–4 switching cycles regardless of the switching frequency.

Downloaded from Arrow.com.

4.0 PACKAGING INFORMATION

4.1 Package Marking Information

8-lead SOIC

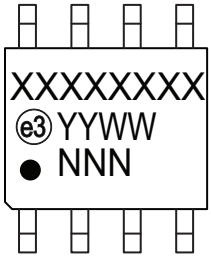

Example

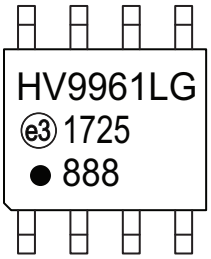

16-lead SOIC

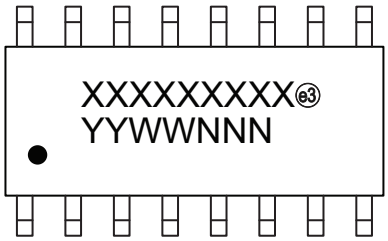

Example

Legend:	XX...X	Product Code or Customer-specific information
	Y	Year code (last digit of calendar year)
	YY	Year code (last 2 digits of calendar year)
	WW	Week code (week of January 1 is week ‘01’)
	NNN	Alphanumeric traceability code
	e3	Pb-free JEDEC® designator for Matte Tin (Sn)
	*	This package is Pb-free. The Pb-free JEDEC designator (e3) can be found on the outer packaging for this package.
Note:	In the event the full Microchip part number cannot be marked on one line, it will be carried over to the next line, thus limiting the number of available characters for product code or customer-specific information. Package may or not include the corporate logo.	

© 2017 Microchip Technology Inc.

Downloaded from Arrow.com.

8-Lead SOIC (Narrow Body) Package Outline (LG/TG)

4.90x3.90mm body, 1.75mm height (max), 1.27mm pitch

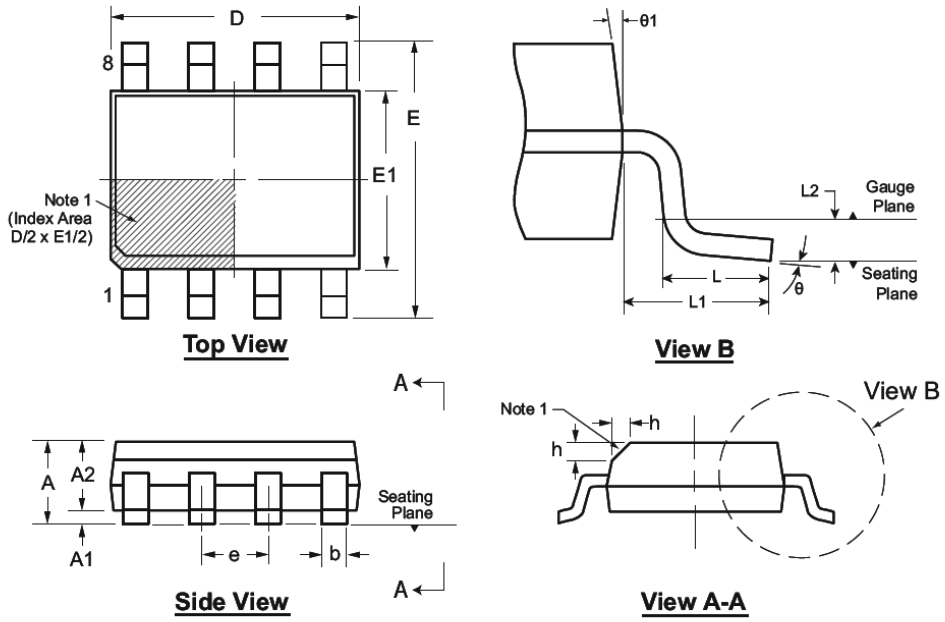

Note: For the most current package drawings, see the Microchip Packaging Specification at www.microchip.com/packaging.

Note:

1. *This chamfer feature is optional. A Pin 1 identifier must be located in the index area indicated. The Pin 1 identifier can be: a molded mark/identifier; an embedded metal marker; or a printed indicator.*

Symbol		A	A1	A2	b	D	E	E1	e	h	L	L1	L2	θ	θ1
Dimension (mm)	MIN	1.35*	0.10	1.25	0.31	4.80*	5.80*	3.80*	1.27 BSC	0.25	0.40	1.04 REF	0.25 BSC	0°	5°
	NOM	-	-	-	-	4.90	6.00	3.90		-	-			-	-
	MAX	1.75	0.25	1.65*	0.51	5.00*	6.20*	4.00*		0.50	1.27			8°	15°

JEDEC Registration MS-012, Variation AA, Issue E, Sept. 2005.
** This dimension is not specified in the JEDEC drawing.*
Drawings are not to scale.

Downloaded from Arrow.com.

16-Lead SOIC (Narrow Body) Package Outline (NG)

9.90x3.90mm body, 1.75mm height (max), 1.27mm pitch

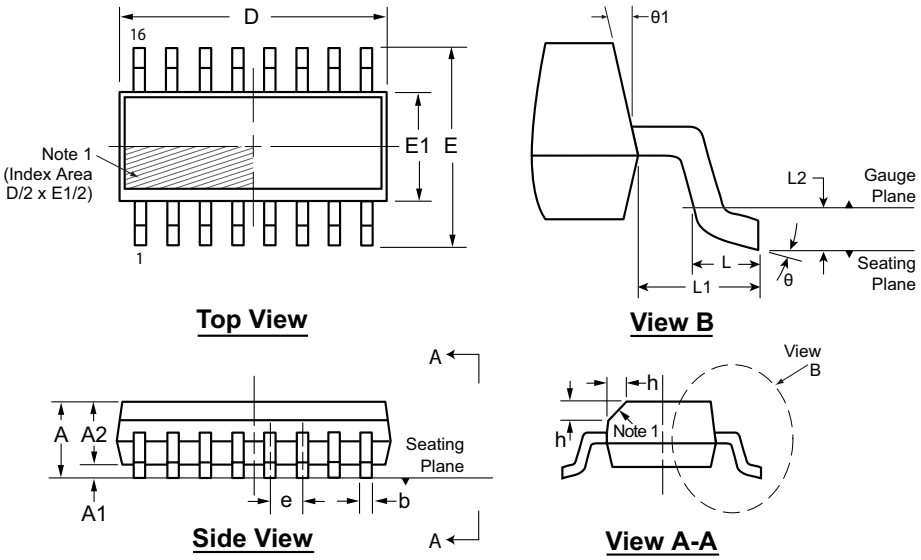

Note: For the most current package drawings, see the Microchip Packaging Specification at www.microchip.com/packaging.

Note:

1. *This chamfer feature is optional. If it is not present, then a Pin 1 identifier must be located in the index area indicated. The Pin 1 identifier can be: a molded mark/identifier; an embedded metal marker; or a printed indicator.*

Symbol		A	A1	A2	b	D	E	E1	e	h	L	L1	L2	θ	θ1
Dimension (mm)	MIN	1.35*	0.10	1.25	0.31	9.80*	5.80*	3.80*	1.27 BSC	0.25	0.40	1.04 REF	0.25 BSC	0°	5°
	NOM	-	-	-	-	9.90	6.00	3.90		-	-			-	-
	MAX	1.75	0.25	1.65*	0.51	10.00*	6.20*	4.00*		0.50	1.27			8°	15°

JEDEC Registration MS-012, Variation AC, Issue E, Sept. 2005.
** This dimension is not specified in the JEDEC drawing.*
Drawings are not to scale.

© 2017 Microchip Technology Inc.

Downloaded from Arrow.com.

APPENDIX A: REVISION HISTORY

Revision A (November 2017)

- Converted Supertex Doc# DSFP-HV9961 to Microchip DS20005588A
- Changed the package marking format
- Changed the packaging quantity of the LG package from 2500/Reel to 3300/Reel
- Changed the packaging quantity of the NG M901 media type from 1000/Reel to 2600/Reel
- Changed the packaging quantity of the NG M934 media type from 2500/Reel to 2600/Reel
- Made minor text changes throughout the document

Downloaded from Arrow.com.

PRODUCT IDENTIFICATION SYSTEM

To order or obtain information, e.g., on pricing or delivery, contact your local Microchip representative or sales office.

PART NO.	XX	-	X	-	X
Device	Package Options		Environmental		Media Type

Device:	HV9961	=	LED Driver with Average-Current Mode Constant-Current Control
Packages:	LG	=	8-lead SOIC
	NG	=	16-lead SOIC
Environmental:	G	=	Lead (Pb)-free/RoHS-compliant Package
Media Types:	(blank)	=	3300/Reel for an LG Package
	(blank)	=	45/Tube for an NG Package
	M901	=	2600/Reel for an NG Package
	M934	=	2600/Reel for an NG Package

Note: For Media Types M901 and M934, the base quantity for tape and reel was standardized to 2600/reel. Both options will result in the delivery of the same number of parts/reel.

Examples:

a) HV9961LG-G:	LED Driver with Average-Current Mode Constant-Current Control, 8-lead SOIC, 3300/Reel
b) HV9961NG-G:	LED Driver with Average-Current Mode Constant-Current Control, 16-lead SOIC, 45/Tube
c) HV9961NG-G-M901:	LED Driver with Average-Current Mode Constant-Current Control, 16-lead SOIC, 2600/Reel
d) HV9961NG-G-M934:	LED Driver with Average-Current Mode Constant-Current Control, 16-lead SOIC, 2600/Reel

© 2017 Microchip Technology Inc.

Downloaded from Arrow.com.

Note the following details of the code protection feature on Microchip devices:

- Microchip products meet the specification contained in their particular Microchip Data Sheet.
- Microchip believes that its family of products is one of the most secure families of its kind on the market today, when used in the intended manner and under normal conditions.
- There are dishonest and possibly illegal methods used to breach the code protection feature. All of these methods, to our knowledge, require using the Microchip products in a manner outside the operating specifications contained in Microchip's Data Sheets. Most likely, the person doing so is engaged in theft of intellectual property.
- Microchip is willing to work with the customer who is concerned about the integrity of their code.
- Neither Microchip nor any other semiconductor manufacturer can guarantee the security of their code. Code protection does not mean that we are guaranteeing the product as "unbreakable."

Code protection is constantly evolving. We at Microchip are committed to continuously improving the code protection features of our products. Attempts to break Microchip's code protection feature may be a violation of the Digital Millennium Copyright Act. If such acts allow unauthorized access to your software or other copyrighted work, you may have a right to sue for relief under that Act.

Information contained in this publication regarding device applications and the like is provided only for your convenience and may be superseded by updates. It is your responsibility to ensure that your application meets with your specifications. MICROCHIP MAKES NO REPRESENTATIONS OR WARRANTIES OF ANY KIND WHETHER EXPRESS OR IMPLIED, WRITTEN OR ORAL, STATUTORY OR OTHERWISE, RELATED TO THE INFORMATION, INCLUDING BUT NOT LIMITED TO ITS CONDITION, QUALITY, PERFORMANCE, MERCHANTABILITY OR FITNESS FOR PURPOSE**.** Microchip disclaims all liability arising from this information and its use. Use of Microchip devices in life support and/or safety applications is entirely at the buyer's risk, and the buyer agrees to defend, indemnify and hold harmless Microchip from any and all damages, claims, suits, or expenses resulting from such use. No licenses are conveyed, implicitly or otherwise, under any Microchip intellectual property rights unless otherwise stated.

Microchip received ISO/TS-16949:2009 certification for its worldwide headquarters, design and wafer fabrication facilities in Chandler and Tempe, Arizona; Gresham, Oregon and design centers in California and India. The Company's quality system processes and procedures are for its PIC® MCUs and dsPIC® DSCs, KEELOQ® code hopping devices, Serial EEPROMs, microperipherals, nonvolatile memory and analog products. In addition, Microchip's quality system for the design and manufacture of development systems is ISO 9001:2000 certified.

QUALITY MANAGEMENT SYSTEM
CERTIFIED BY DNV
═ ISO/TS 16949 ═

Trademarks

The Microchip name and logo, the Microchip logo, AnyRate, AVR, AVR logo, AVR Freaks, BeaconThings, BitCloud, CryptoMemory, CryptoRF, dsPIC, FlashFlex, flexPWR, Heldo, JukeBlox, KEELOQ, KEELOQ logo, Kleer, LANCheck, LINK MD, maXStylus, maXTouch, MediaLB, megaAVR, MOST, MOST logo, MPLAB, OptoLyzer, PIC, picoPower, PICSTART, PIC32 logo, Prochip Designer, QTouch, RightTouch, SAM-BA, SpyNIC, SST, SST Logo, SuperFlash, tinyAVR, UNI/O, and XMEGA are registered trademarks of Microchip Technology Incorporated in the U.S.A. and other countries.

ClockWorks, The Embedded Control Solutions Company, EtherSynch, Hyper Speed Control, HyperLight Load, IntelliMOS, mTouch, Precision Edge, and Quiet-Wire are registered trademarks of Microchip Technology Incorporated in the U.S.A.

Adjacent Key Suppression, AKS, Analog-for-the-Digital Age, Any Capacitor, AnyIn, AnyOut, BodyCom, chipKIT, chipKIT logo, CodeGuard, CryptoAuthentication, CryptoCompanion, CryptoController, dsPICDEM, dsPICDEM.net, Dynamic Average Matching, DAM, ECAN, EtherGREEN, In-Circuit Serial Programming, ICSP, Inter-Chip Connectivity, JitterBlocker, KleerNet, KleerNet logo, Mindi, MiWi, motorBench, MPASM, MPF, MPLAB Certified logo, MPLIB, MPLINK, MultiTRAK, NetDetach, Omniscient Code Generation, PICDEM, PICDEM.net, PICkit, PICtail, PureSilicon, QMatrix, RightTouch logo, REAL ICE, Ripple Blocker, SAM-ICE, Serial Quad I/O, SMART-I.S., SQI, SuperSwitcher, SuperSwitcher II, Total Endurance, TSHARC, USBCheck, VariSense, ViewSpan, WiperLock, Wireless DNA, and ZENA are trademarks of Microchip Technology Incorporated in the U.S.A. and other countries.

SQTP is a service mark of Microchip Technology Incorporated in the U.S.A.

Silicon Storage Technology is a registered trademark of Microchip Technology Inc. in other countries.

GestIC is a registered trademark of Microchip Technology Germany II GmbH & Co. KG, a subsidiary of Microchip Technology Inc., in other countries.

All other trademarks mentioned herein are property of their respective companies.

© 2017, Microchip Technology Incorporated, All Rights Reserved.

ISBN: 978-1-5224-2317-1

Downloaded from Arrow.com.

Worldwide Sales and Service

AMERICAS

Corporate Office
2355 West Chandler Blvd.
Chandler, AZ 85224-6199
Tel: 480-792-7200
Fax: 480-792-7277
Technical Support:
http://www.microchip.com/support
Web Address:
www.microchip.com

Atlanta
Duluth, GA
Tel: 678-957-9614
Fax: 678-957-1455

Austin, TX
Tel: 512-257-3370

Boston
Westborough, MA
Tel: 774-760-0087
Fax: 774-760-0088

Chicago
Itasca, IL
Tel: 630-285-0071
Fax: 630-285-0075

Dallas
Addison, TX
Tel: 972-818-7423
Fax: 972-818-2924

Detroit
Novi, MI
Tel: 248-848-4000

Houston, TX
Tel: 281-894-5983

Indianapolis
Noblesville, IN
Tel: 317-773-8323
Fax: 317-773-5453
Tel: 317-536-2380

Los Angeles
Mission Viejo, CA
Tel: 949-462-9523
Fax: 949-462-9608
Tel: 951-273-7800

Raleigh, NC
Tel: 919-844-7510

New York, NY
Tel: 631-435-6000

San Jose, CA
Tel: 408-735-9110
Tel: 408-436-4270

Canada - Toronto
Tel: 905-695-1980
Fax: 905-695-2078

ASIA/PACIFIC

Australia - Sydney
Tel: 61-2-9868-6733

China - Beijing
Tel: 86-10-8569-7000

China - Chengdu
Tel: 86-28-8665-5511

China - Chongqing
Tel: 86-23-8980-9588

China - Dongguan
Tel: 86-769-8702-9880

China - Guangzhou
Tel: 86-20-8755-8029

China - Hangzhou
Tel: 86-571-8792-8115

China - Hong Kong SAR
Tel: 852-2943-5100

China - Nanjing
Tel: 86-25-8473-2460

China - Qingdao
Tel: 86-532-8502-7355

China - Shanghai
Tel: 86-21-3326-8000

China - Shenyang
Tel: 86-24-2334-2829

China - Shenzhen
Tel: 86-755-8864-2200

China - Suzhou
Tel: 86-186-6233-1526

China - Wuhan
Tel: 86-27-5980-5300

China - Xian
Tel: 86-29-8833-7252

China - Xiamen
Tel: 86-592-2388138

China - Zhuhai
Tel: 86-756-3210040

ASIA/PACIFIC

India - Bangalore
Tel: 91-80-3090-4444

India - New Delhi
Tel: 91-11-4160-8631

India - Pune
Tel: 91-20-4121-0141

Japan - Osaka
Tel: 81-6-6152-7160

Japan - Tokyo
Tel: 81-3-6880- 3770

Korea - Daegu
Tel: 82-53-744-4301

Korea - Seoul
Tel: 82-2-554-7200

Malaysia - Kuala Lumpur
Tel: 60-3-7651-7906

Malaysia - Penang
Tel: 60-4-227-8870

Philippines - Manila
Tel: 63-2-634-9065

Singapore
Tel: 65-6334-8870

Taiwan - Hsin Chu
Tel: 886-3-577-8366

Taiwan - Kaohsiung
Tel: 886-7-213-7830

Taiwan - Taipei
Tel: 886-2-2508-8600

Thailand - Bangkok
Tel: 66-2-694-1351

Vietnam - Ho Chi Minh
Tel: 84-28-5448-2100

EUROPE

Austria - Wels
Tel: 43-7242-2244-39
Fax: 43-7242-2244-393

Denmark - Copenhagen
Tel: 45-4450-2828
Fax: 45-4485-2829

Finland - Espoo
Tel: 358-9-4520-820

France - Paris
Tel: 33-1-69-53-63-20
Fax: 33-1-69-30-90-79

Germany - Garching
Tel: 49-8931-9700

Germany - Haan
Tel: 49-2129-3766400

Germany - Heilbronn
Tel: 49-7131-67-3636

Germany - Karlsruhe
Tel: 49-721-625370

Germany - Munich
Tel: 49-89-627-144-0
Fax: 49-89-627-144-44

Germany - Rosenheim
Tel: 49-8031-354-560

Israel - Ra'anana
Tel: 972-9-744-7705

Italy - Milan
Tel: 39-0331-742611
Fax: 39-0331-466781

Italy - Padova
Tel: 39-049-7625286

Netherlands - Drunen
Tel: 31-416-690399
Fax: 31-416-690340

Norway - Trondheim
Tel: 47-7289-7561

Poland - Warsaw
Tel: 48-22-3325737

Romania - Bucharest
Tel: 40-21-407-87-50

Spain - Madrid
Tel: 34-91-708-08-90
Fax: 34-91-708-08-91

Sweden - Gothenberg
Tel: 46-31-704-60-40

Sweden - Stockholm
Tel: 46-8-5090-4654

UK - Wokingham
Tel: 44-118-921-5800
Fax: 44-118-921-5820

© 2017 Microchip Technology Inc.

Downloaded from Arrow.com.