Contents

1 Typical application: video driver 3

2 Absolute maximum ratings and operating conditions 4

3 Electrical characteristics 5

3.1 Standby mode 11

3.2 Characteristic curves for V_{CC} = 3 V 12

3.3 Characteristic curves for V_{CC} = 5 V 15

3.4 Characteristic curves for V_{CC} = 10 V 18

4 Testing conditions 21

4.1 Layout precautions 21

4.2 Maximum input level 22

4.3 Video capabilities 22

4.4 Precautions when operating on an asymmetrical supply 24

5 Package information 26

5.1 SOT23-5 package information 27

5.2 SO8 package information 28

5.3 TSSOP8 package information 29

5.4 SO14 package information 30

5.5 TSSOP14 package information 31

5.6 SO16 package information 32

5.7 TSSOP16 package information 33

6 Order information 34

7 Revision history 35

Downloaded from Arrow.com.

1 Typical application: video driver

A typical application for the TSH7x family is that of a video driver for driving STi7xxx DAC outputs on 75-ohm lines.

Figure 1 show the benefits of the TSH7x family as single supply drivers.

Figure 1. Benefits of TSH7x family: +3 V or +5 V single supply solution

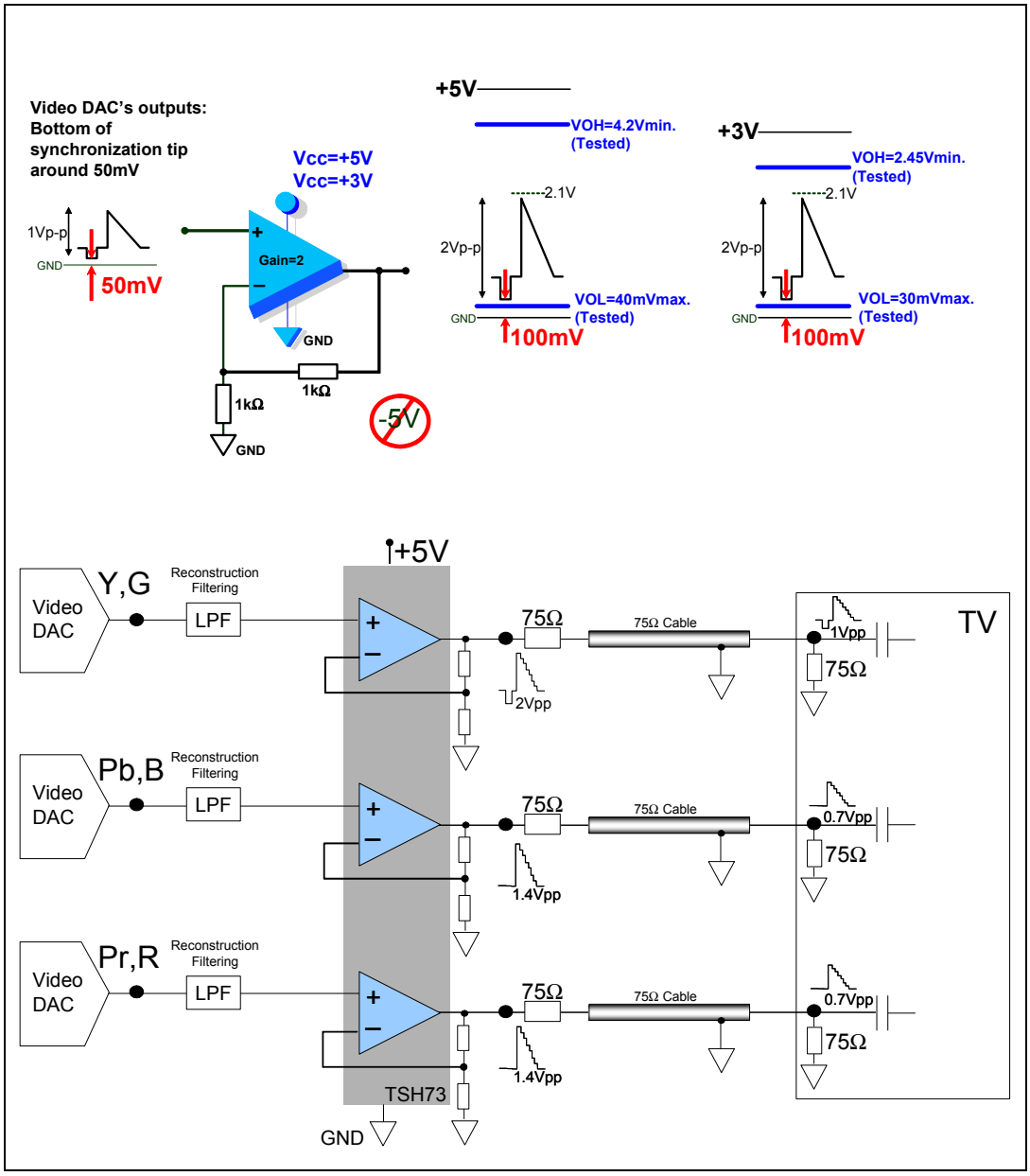

Downloaded from Arrow.com.

2 Absolute maximum ratings and operating conditions

Table 1. Absolute maximum ratings (AMR)

Symbol	Parameter	Value	Unit
V_{CC}	Supply Voltage (1)	14	V
V_{id}	Differential Input Voltage (2)	±2	
V_i	Input Voltage (3)	±6	
T_{oper}	Operating Free Air Temperature Range	0 to +70	°C
T_{stg}	Storage Temperature	-65 to +150	
T_j	Maximum Junction Temperature	150	
R_{thjc}	Thermal resistance junction to case (4) SOT23-5 SO8 TSSOPO8 SO14 TSSOP14 SO16 TSSOP16	 80 28 37 22 32 35 35	°C/W
R_{thja}	Thermal resistance junction to ambient area SOT23-5 SO8 TSSOPO8 SO14 TSSOP14 SO16 TSSOP16	 250 157 130 125 110 110 110	
ESD	Human body model	2	kV

1. All voltages values, except differential voltage are with respect to the network ground terminal
2. Differential voltages are the non-inverting input terminal with respect to the inverting terminal
3. The magnitude of the input and output must never exceed V_{CC} +0.3V
4. Short-circuits can cause excessive heating

Table 2. Operating conditions

Symbol	Parameter	Value	Unit
V_{CC}	Supply voltage	3 to 12	V
V_{IC}	Common mode input voltage range	V_{CC}^- to (V_{CC}^+ -1.1)	
Standby		(V_{CC}^-) to (V_{CC}^+)	

Downloaded from Arrow.com.

3 Electrical characteristics

Table 3. V_{CC}^{+} = 3 V, V_{CC}^{-} = GND, V_{IC} = 1.5 V, T_{amb} = 25 °C (unless otherwise specified)

Symbol	Parameter	Test conditions	Min.	Typ.	Max.	Unit
$\|V_{io}\|$	Input offset voltage	T_{amb} = 25 °C $T_{min.} < T_{amb} < T_{max.}$		1.2	10 12	mV
ΔV_{io}	Input offset voltage drift vs. temp.	$T_{min.} < T_{amb} < T_{max.}$		4		µV/°C
I_{io}	Input offset current	T_{amb} = 25 °C $T_{min.} < T_{amb} < T_{max.}$		0.1	3.5 5	µA
I_{ib}	Input bias current	T_{amb} = 25 °C $T_{min.} < T_{amb} < T_{max.}$		6	15 20	
C_{in}	Input capacitance			0.2		pF
I_{CC}	Supply current per operator	T_{amb} = 25 °C $T_{min.} < T_{amb} < T_{max.}$		7.2	9.8 11	mA
CMRR	Common mode rejection ratio ($\delta V_{IC}/\delta Vio$)	+0.1 < V_{IC} <+1.9 V and V_{out} = 1.5 V T_{amb} = 25 °C $T_{min.} < T_{amb} < T_{max.}$	 65 64	 90		dB
SVRR	Supply voltage rejection ratio ($\delta VCC/\delta Vio$)	T_{amb} = 25 °C $T_{min.} < T_{amb} < T_{max.}$	66 65	74		
PSRR	Power supply rejection ratio ($\delta VCC/\delta V_{out}$)	Positive and negative rail		75		
A_{vd}	Large signal voltage gain	R_L = 150 Ω to 1.5 V, V_{out} = 1 V to 2 V T_{amb} = 25 °C $T_{min.} < T_{amb} < T_{max.}$	 70 65	 81		
I_o	Output short circuit current source	T_{amb}=25 °C, V_{id} = +1, V_{out} to 1.5 V, V_{id} = -1, V_{out} to 1.5 V I_{Source} I_{Sink} $T_{min.} < T_{amb} < T_{max.}$ V_{id} = +1, V_{out} to 1.5 V V_{id} = -1, V_{out} to 1.5 V I_{Source} I_{Sink}	 30 20 22 19	 43 33		mA
V_{OH}	High level output voltage	T_{amb} = 25 °C R_L = 150 Ω to GND R_L = 600 Ω to GND R_L = 2 kΩ to GND R_L = 10 kΩ to GND R_L = 150 Ω to 1.5 V R_L = 600 Ω to 1.5 V R_L = 2 kΩ to 1.5 V R_L = 10 kΩ to 1.5 V $T_{min.} < T_{amb} < T_{max.}$ R_L = 150 Ω to GND R_L = 150 Ω to 1.5V	 2.45 2.65 2.4 2.6	 2.60 2.87 2.91 2.93 2.77 2.90 2.92 2.93		V

Downloaded from Arrow.com.

Table 3. V_{CC}^{+} = 3 V, V_{CC}^{-} = GND, V_{IC} = 1.5 V, T_{amb} = 25 °C (unless otherwise specified) (continued)

Symbol	Parameter	Test conditions	Min.	Typ.	Max.	Unit
V_{OL}	Low level output voltage	T_{amb} = 25 °C R_L = 150 Ω to GND R_L = 600 Ω to GND R_L = 2 kΩ to GND R_L = 10 kΩ to GND R_L = 150 Ω to 1.5 V R_L = 600 Ω to 1.5 V R_L = 2 kΩ to 1.5 V R_L = 10 kΩ to 1.5 V $T_{min.} < T_{amb} < T_{max.}$ R_L = 150 Ω to GND R_L = 150 Ω to 1.5 V		 10 11 11 11 140 90 68 57	 30 300 40 350	mV
GBP	Gain bandwidth product	F = 10 MHz A_{VCL} = +11 A_{VCL} = -10		 65 55		MHz
Bw	Bandwidth @-3dB	A_{VCL}=+1, R_L=150 Ω to 1.5 V		87		
SR	Slew rate	A_{VCL}=+2, R_L=150 Ω // C_L to 1.5 V C_L = 5 pF C_L = 30 pF	 45	 80 85		V/µs
ϕm	Phase margin	R_L=150 Ω // 30 pF to 1.5 V		40		°
en	Equivalent input noise voltage	F=100 kHz		11		nV/√Hz
THD	Total harmonic distortion	A_{VCL} = +2, F = 4 MHz, R_L=150 Ω // 30pF to 1.5 V V_{out} = 1 Vpp V_{out} = 2 Vpp		 -61 -54		dB
IM2	Second order intermodulation product	A_{VCL} = +2, V_{out} = 2 Vpp R_L = 150 Ω to 1.5 V Fin1 = 180 kHz, Fin2 = 280 kHz spurious measurements @100 kHz		-76		dBc
IM3	Third order inter modulation product	A_{VCL} = +2, V_{out} = 2 Vpp R_L = 150 Ω to 1.5 V Fin1 = 180kHz, Fin2 = 280 kHz spurious measurements @400 kHz		-68		
ΔG	Differential gain	A_{VCL}=+2, R_L = 150 Ω to 1.5 V F = 4.5 MHz, V_{out} = 2 Vpp		0.5		%
Df	Differential phase	A_{VCL} = +2, R_L = 150 Ω to 1.5 V F = 4.5 MHz, V_{out} = 2 Vpp		0.5		°
Gf	Gain flatness	F = DC to 6 MHz, A_{VCL} = +2		0.2		dB
Vo1/Vo2	Channel separation	F = 1 MHz to 10 MHz		65		

Downloaded from Arrow.com.

Table 4. V_{CC}^{+} = 5 V, V_{CC}^{-} = GND, V_{IC} = 2.5 V, T_{amb} = 25 °C (unless otherwise specified)

Symbol	Parameter	Test conditions	Min.	Typ.	Max.	Unit
$\|V_{io}\|$	Input offset voltage	T_{amb} = 25 °C $T_{min.} < T_{amb} < T_{max.}$		1.1	10 12	mV
ΔV_{io}	Input offset voltage drift vs. temp.	$T_{min.} < T_{amb} < T_{max.}$		3		µV/°C
I_{io}	Input offset current	T_{amb} = 25 °C $T_{min.} < T_{amb} < T_{max.}$		0.1	3.5 5	µA
I_{ib}	Input bias current	T_{amb} = 25 °C $T_{min.} < T_{amb} < T_{max.}$		6	15 20	
C_{in}	Input capacitance			0.3		pF
I_{CC}	Supply current per operator	T_{amb} = 25 °C $T_{min.} < T_{amb} < T_{max.}$		8.2	10.5 11.5	mA
CMRR	Common mode rejection ratio ($\delta V_{IC}/\delta Vio$)	+0.1 < V_{IC} < 3.9 V and V_{out} = 2.5 V T_{amb} = 25 °C $T_{min.} < T_{amb} < T_{max.}$	 72 71	 97		dB
SVRR	Supply voltage rejection ratio ($\delta V_{CC}/\delta Vio$)	T_{amb} = 25°C $T_{min.} < T_{amb} < T_{max.}$	68 67	75		
PSRR	Power supply rejection ratio ($\delta V_{CC}/\delta V_{out}$)	Positive and negative rail		75		
A_{vd}	Large signal voltage gain	R_L = 150 Ω to 1.5 V, V_{out} = 1 V to 4 V T_{amb} = 25 °C $T_{min.} < T_{amb} < T_{max.}$	 75 70	 84		
I_o	Output short circuit current source	T_{amb} = 25 °C, V_{id} = +1, V_{out} to 1.5 V, V_{id} = -1, V_{out} to 1.5 V I_{Source} I_{Sink} $T_{min.} < T_{amb} < T_{max.}$ V_{id} = +1, V_{out} to 1.5 V V_{id} = -1, V_{out} to 1.5 V I_{Source} I_{Sink}	 35 33 34 32	 55 55		mA
V_{OH}	High level output voltage	T_{amb} = 25 °C R_L = 150 Ω to GND R_L = 600 Ω to GND R_L = 2 kΩ to GND R_L = 10 kΩ to GND R_L = 150 Ω to 2.5 V R_L = 600 Ω to 2.5 V R_L = 2 kΩ to 2.5 V R_L = 10 kΩ to 2.5 V $T_{min.} < T_{amb} < T_{max.}$ R_L = 150 Ω to GND R_L = 150 Ω to 2.5 V	 4.2 4.5 4.1 4.4	 4.36 4.85 4.90 4.93 4.66 4.90 4.92 4.93		V

Downloaded from Arrow.com.

Table 4. V_{CC}^{+} = 5 V, V_{CC}^{-} = GND, V_{IC} = 2.5 V, T_{amb} = 25 °C (unless otherwise specified) (continued)

Symbol	Parameter	Test conditions	Min.	Typ.	Max.	Unit
V_{OL}	Low level output voltage	T_{amb}=25 °C R_L = 150 Ω to GND R_L = 600 Ω to GND R_L = 2 kΩ to GND R_L = 10 kΩ to GND R_L = 150 Ω to 2.5 V R_L = 600 Ω to 2.5 V R_L = 2 kΩ to 2.5 V R_L = 10 kΩ to 2.5 V $T_{min.} < T_{amb} < T_{max.}$ R_L = 150 Ω to GND R_L = 150 Ω to 2.5 V		 20 23 23 23 220 105 76 61	 40 400 60 450	mV
GBP	Gain bandwidth product	F = 10 MHz A_{VCL} = +11 A_{VCL} = -10		 65 55		MHz
Bw	Bandwidth @-3 dB	A_{VCL} = +1, R_L = 150 Ω to 2.5 V		87		
SR	Slew rate	A_{VCL} = +2, R_L = 150Ω // C_L to 2.5 V C_L = 5 pF C_L = 30 pF	 60	 104 105		V/µs
ϕm	Phase margin	R_L = 150 Ω // 30 pF to 2.5 V		40		°
en	Equivalent input noise voltage	F = 100 kHz		11		nV/√Hz
THD	Total harmonic distortion	A_{VCL} = +2, F = 4 MHz R_L = 150 Ω // 30 pF to 2.5 V V_{out} = 1 Vpp V_{out} = 2 Vpp		 -61 -54		dB
IM2	Second order intermodulation product	A_{VCL} = +2, V_{out} = 2Vpp R_L = 150 Ω to 2.5 V Fin1 = 180 kHz, Fin2 = 280 kHz spurious measurements @100 kHz		-76		dBc
IM3	Third order inter modulation product	A_{VCL} = +2, V_{out} = 2 Vpp R_L = 150 Ω to 2.5 V Fin1 = 180 kHz, Fin2 = 280 kHz spurious measurements @400 kHz		-68		
ΔG	Differential gain	A_{VCL} = +2, R_L = 150 Ω to 2.5 V F = 4.5 MHz, V_{out} = 2 Vpp		0.5		%
Df	Differential phase	A_{VCL} = +2, R_L = 150 Ω to 2.5 V F = 4.5 MHz, V_{out} = 2 Vpp		0.5		°
Gf	Gain flatness	F = DC to 6 MHz, A_{VCL} = +2		0.2		dB
Vo1/Vo2	Channel separation	F = 1 MHz to 10 MHz		65		

Downloaded from Arrow.com.

Table 5. V_{CC}^{+} = 5 V, V_{CC}^{-} = -5V, V_{IC} = GND, T_{amb} = 25 °C (unless otherwise specified)

Symbol	Parameter	Test conditions	Min.	Typ.	Max.	Unit
$\|V_{io}\|$	Input offset voltage	T_{amb} = 25 °C $T_{min.} < T_{amb} < T_{max.}$		0.8	10 12	mV
ΔV_{io}	Input offset voltage drift vs. temp.	$T_{min.} < T_{amb} < T_{max.}$		2		µV/°C
I_{io}	Input offset current	T_{amb} = 25°C $T_{min.} < T_{amb} < T_{max.}$		0.1	3.5 5	µA
I_{ib}	Input bias current	T_{amb} = 25°C $T_{min.} < T_{amb} < T_{max.}$		6	15 20	
C_{in}	Input capacitance			0.7		pF
I_{CC}	Supply current per operator	T_{amb} = 25°C $T_{min.} < T_{amb} < T_{max.}$		9.8	12.3 13.4	mA
CMRR	Common mode rejection ratio ($\delta V_{IC}/\delta Vio$)	-4.9 < V_{IC} < 3.9 V and V_{out} = GND T_{amb} = 25 °C $T_{min.} < T_{amb} < T_{max.}$	 81 80	 106		dB
SVRR	Supply voltage rejection ratio ($\delta V_{CC}/\delta Vio$)	T_{amb} = 25 °C $T_{min.} < T_{amb} < T_{max.}$	71 70	77		
PSRR	Power supply rejection ratio ($\delta V_{CC}/\delta V_{out}$)	Positive and negative rail		75		
A_{vd}	Large signal voltage gain	R_L = 150 Ω to GND V_{out} = -4 to +4 T_{amb} = 25 °C $T_{min.} < T_{amb} < T_{max.}$	 75 70	 86		
I_o	Output short circuit current source	T_{amb} = 25 °C V_{id} = +1, V_{out} to 1.5 V V_{id} = -1, V_{out} to 1.5 V $\|_{Source}$ $\|_{Sink}$ $T_{min.} < T_{amb} < T_{max.}$ V_{id} = +1, V_{out} to 1.5 V V_{id} = -1, V_{out} to 1.5 V $\|_{Source}$ $\|_{Sink}$	 35 30 34 29	 55 55		mA
V_{OH}	High level output voltage	T_{amb} = 25 °C R_L = 150 Ω to GND R_L = 600 Ω to GND R_L = 2 kΩ to GND R_L = 10 kΩ to GND $T_{min.} < T_{amb} < T_{max.}$ R_L = 150 Ω to GND	 4.2 4.1	 4.36 4.85 4.9 4.93		V
V_{OL}	Low level output voltage	T_{amb} = 25 °C R_L = 150 Ω to GND R_L = 600 Ω to GND R_L = 2 kΩ to GND R_L = 10 kΩ to GND $T_{min.} < T_{amb} < T_{max.}$ R_L = 150 Ω to GND		 -4.63 -4.86 -4.9 -4.93	 -4.4 -4.3	V

Downloaded from Arrow.com.

Table 5. V_{CC}^{+} = 5 V, V_{CC}^{-} = -5V, V_{IC} = GND, T_{amb} = 25 °C (unless otherwise specified) (continued)

Symbol	Parameter	Test conditions	Min.	Typ.	Max.	Unit
GBP	Gain bandwidth product	F = 10 MHz A_{VCL} = +11 A_{VCL} = -10		 65 55		MHz
Bw	Bandwidth @-3dB	A_{VCL} = +1 R_L = 150 Ω // 30 pF to GND		100		MHz
SR	Slew rate	A_{VCL} = +2, R_L = 150 Ω // C_L to GND C_L = 5 pF C_L = 30 pF	 68	 117 118		V/µs
ϕm	Phase margin	R_L = 150 Ω to GND		40		°
en	Equivalent input noise voltage	F = 100 kHz		11		nV/√Hz
THD	Total harmonic distortion	A_{VCL} = +2, F = 4 MHz R_L = 150 Ω // 30 pF to GND V_{out} = 1 Vpp V_{out} = 2 Vpp		 -61 -54		dB
IM2	Second order intermodulation product	A_{VCL} = +2, V_{out} = 2 Vpp R_L = 150 Ω to GND Fin1 = 180 kHz, Fin2 = 280 kHz spurious measurements @100 kHz		-76		dBc
IM3	Third order intermodulation product	A_{VCL} = +2, V_{out} = 2 Vpp R_L = 150 Ω to GND Fin1 = 180 kHz, Fin2 = 280 kHz spurious measurements @400 kHz		-68		
ΔG	Differential gain	A_{VCL} = +2, R_L = 150 Ω to GND F = 4.5 MHz, V_{out} = 2 Vpp		0.5		%
Df	Differential phase	A_{VCL} = +2, R_L = 150 Ω to GND F = 4.5 MHz, V_{out} = 2 Vpp		0.5		°
Gf	Gain flatness	F = DC to 6 MHz, A_{VCL} = +2		0.2		dB
Vo1/Vo2	Channel separation	F = 1 MHz to 10 MHz		65		

Downloaded from Arrow.com.

3.1 Standby mode

Table 6. V_{CC}^+, V_{CC}^-, T_{amb} = 25 °C (unless otherwise specified)

Symbol	Parameter	Test conditions	Min.	Typ.	Max.	Unit
V_{low}	Standby low level		V_{CC}^-		(V_{CC}^- +0.8)	V
V_{high}	Standby high level		(V_{CC}^- +2)		(V_{CC}^+)	
$I_{CC\ STBY}$	Current consumption per operator when STANDBY is active	Pin 8 (TSH71) to V_{CC}^- Pin 1, 2 or 3 (TSH73) to V_{CC}^- Pin 8 (TSH75) to V_{CC}^+ Pin 9 (TSH75) to V_{CC}^-		20	55	µA
Z_{out}	Output impedance (R_{out}//C_{out})	R_{out} C_{out}		10 17		MΩ pF
T_{on}	Time from standby mode to active mode			2		µs
T_{off}	Time from active mode to standby mode	Down to $I_{CC\ STBY}$ = 10 µA		10		

Table 7. TSH71 standby function table

TSH71 standby control pin 8 ($\overline{STBY}$)	Operator status
V_{low}	Standby
V_{high}	Active

Table 8. TSH73 standby function table

TSH73 standby control			Operator status		
Pin 1 ($\overline{STBY}$ OP1)	Pin 2 ($\overline{STBY}$ OP2)	Pin 3 ($\overline{STBY}$ OP3)	OP1	OP1	OP3
V_{low}	x	x	Standby	x	x
V_{high}	x	x	Active	x	x
x	V_{low}	x	x	Standby	x
x	V_{high}		x	Active	x
x	x	V_{low}	x	x	Standby
x	x	V_{high}	x	x	Active

Downloaded from Arrow.com.

Table 9. TSH75 standby function table

TSH75 standby control		Operator status			
Pin 8 (STBY OP2)	Pin 9 (STBY OP3)	OP1	OP2	OP3	OP4
V_{high}	V_{low}	Active	Standby	Standby	Active
V_{high}	V_{high}			Active	
V_{low}	V_{low}		Active	Standby	
V_{low}	V_{high}			Active	

3.2 Characteristic curves for V_{CC} = 3 V

Figure 2. Closed loop gain and phase vs. frequency (gain = +2, V_{CC} = ±1.5 V, R_L = 150 Ω, T_{amb} = 25 °C)

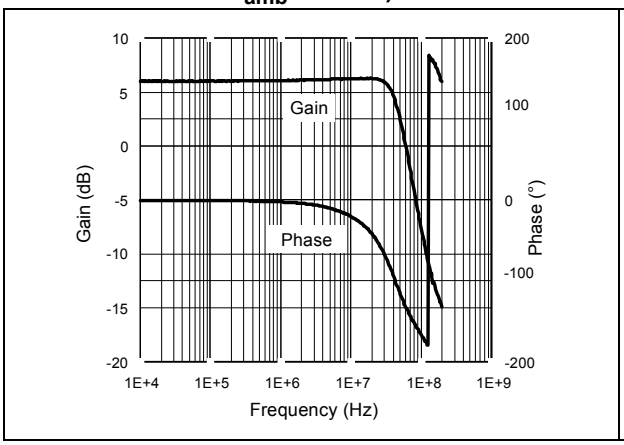

Figure 3. Overshoot function of output capacitance (gain = +2, V_{CC} = ±1.5 V, T_{amb} = 25 °C)

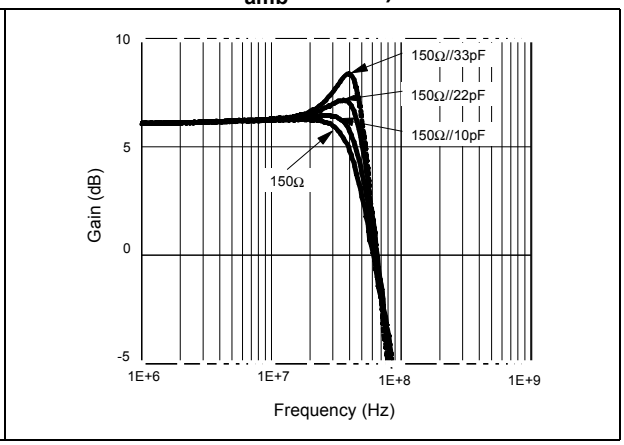

Figure 4. Closed loop gain and phase vs. frequency (gain = -10, V_{CC} = ±1.5 V, R_L = 150 Ω, T_{amb} = 25 °C)

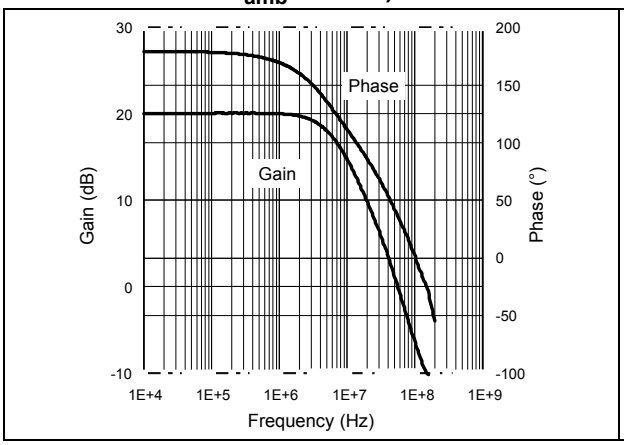

Figure 5. Closed loop gain and phase vs. frequency (gain = +11, V_{CC} = ±1.5 V, R_L = 150 Ω, T_{amb} = 25 °C)

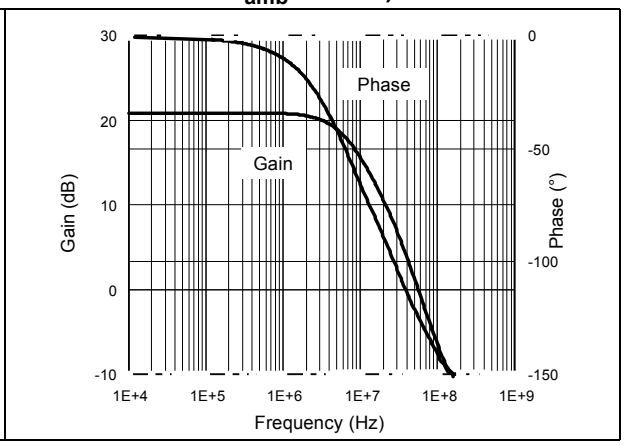

Downloaded from Arrow.com.

Figure 6. Large signal measurement - positive slew rate (gain = 2, V_{CC} = ±1.5 V, Z_L = 150 Ω // 5.6 pF

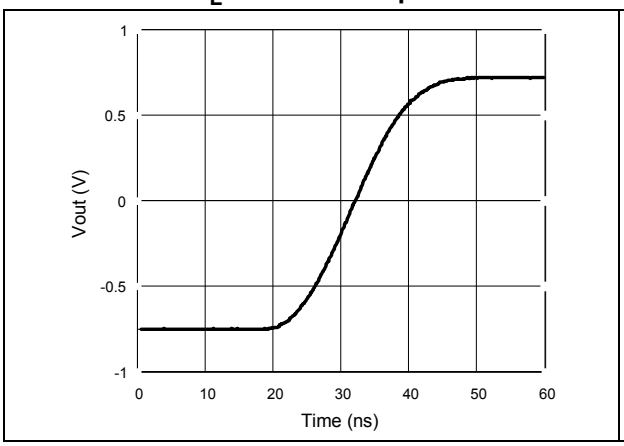

Figure 7. Large signal measurement - negative slew rate (gain = 2, V_{CC} = ±1.5 V, Z_L = 150 Ω // 5.6 pF)

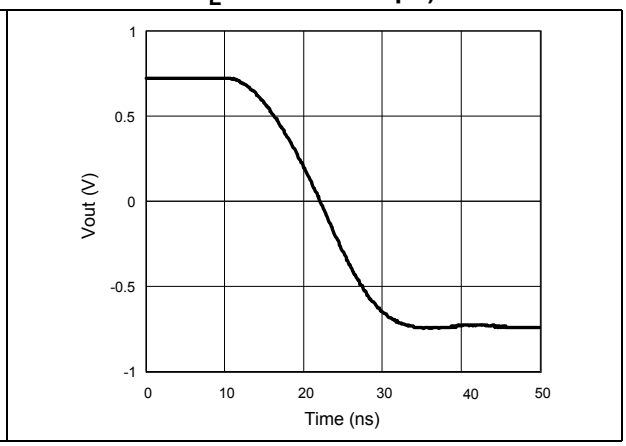

Figure 8. Small signal measurement - rise time (gain = 2, V_{CC} = ±1.5 V, Z_L = 150 Ω)

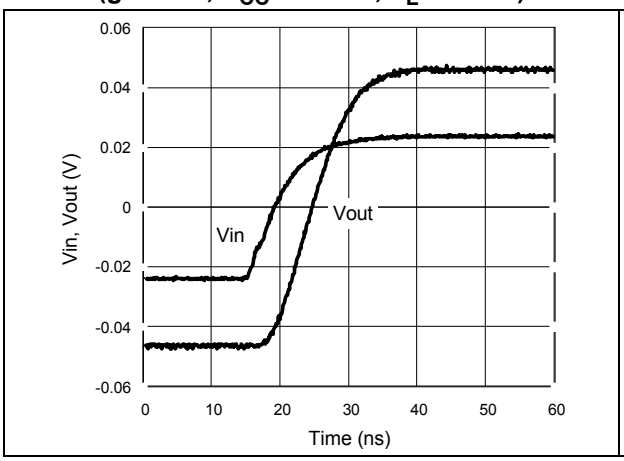

Figure 9. Small signal measurement - fall time (gain = 2, V_{CC} = ±1.5 V, Z_L = 150 Ω)

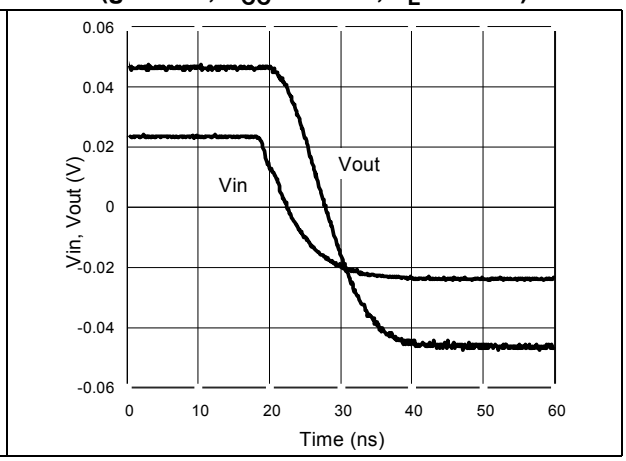

Figure 10. Channel separation (Xtalk) vs. frequency (measurement configuration: Xtalk = 20 log (V0/V1))

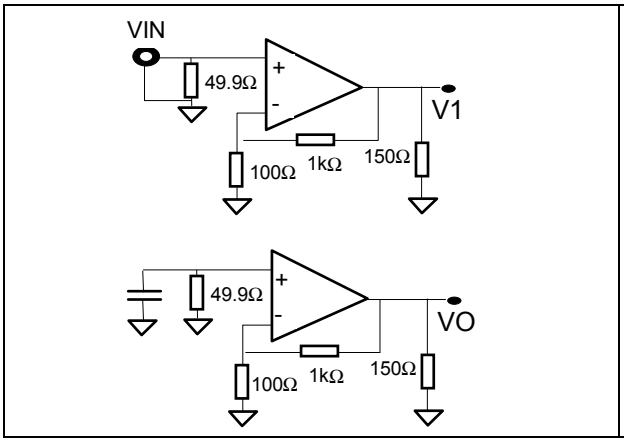

Figure 11. Channel separation (Xtalk) vs. frequency (gain = +11, V_{CC} = 1.5 V, Z_L = 150 Ω // 27 pF)

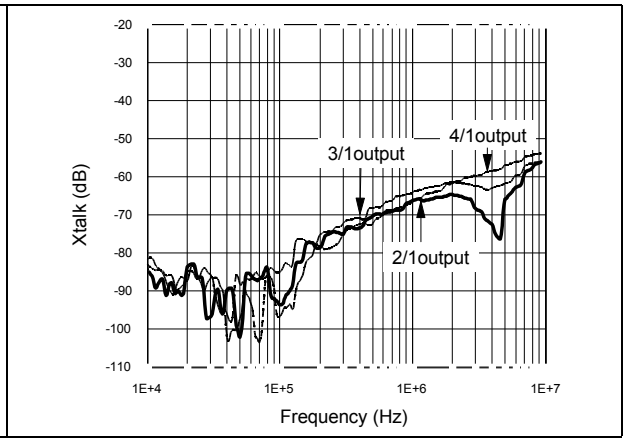

Downloaded from Arrow.com.

Figure 12. Equivalent noise voltage (gain = 100, V_{CC} = ±1.5 V, No load)

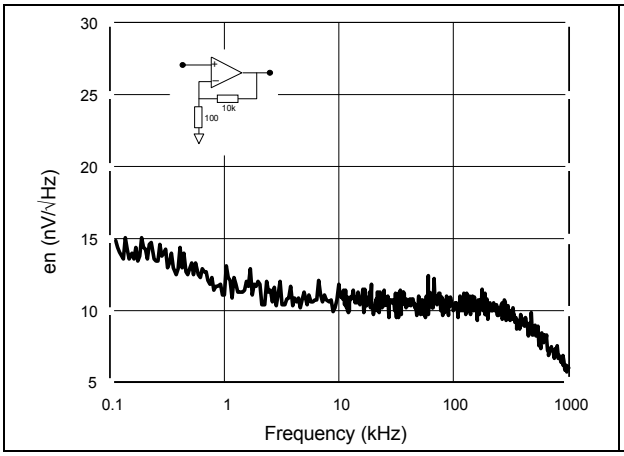

Figure 13. Maximum output swing (gain = 11, V_{CC} = ±5 V, R_L = 150 Ω

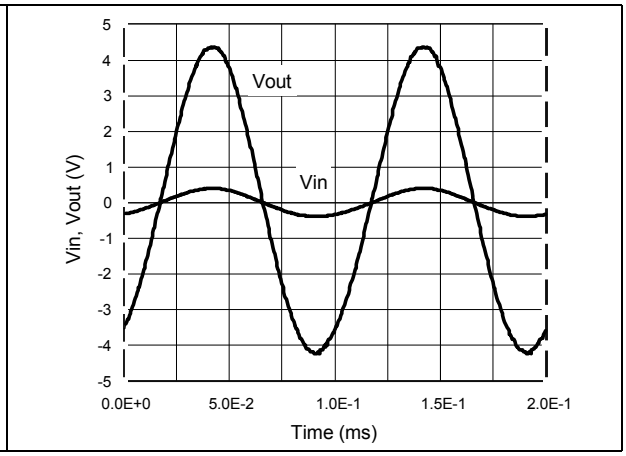

Figure 14. Standby mode - T_{on}, T_{off} (V_{CC} = ±1.5 V, open loop)

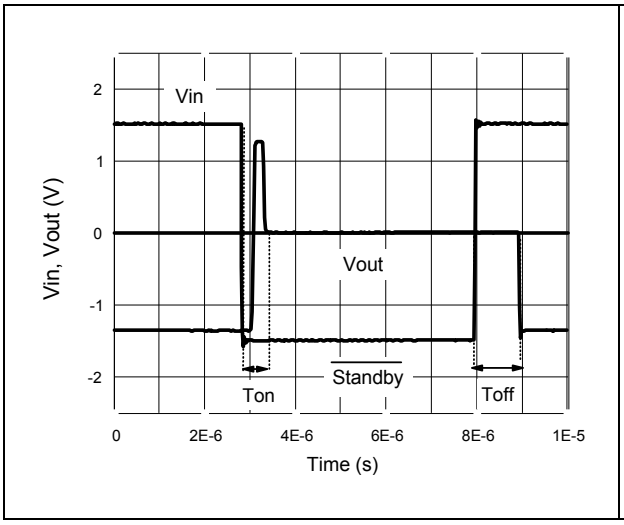

Figure 15. Group delay gain = 2 (V_{CC} = ±1.5 V, Z_L = 150 Ω // 27 pF, T_{amb} = 25 °C)

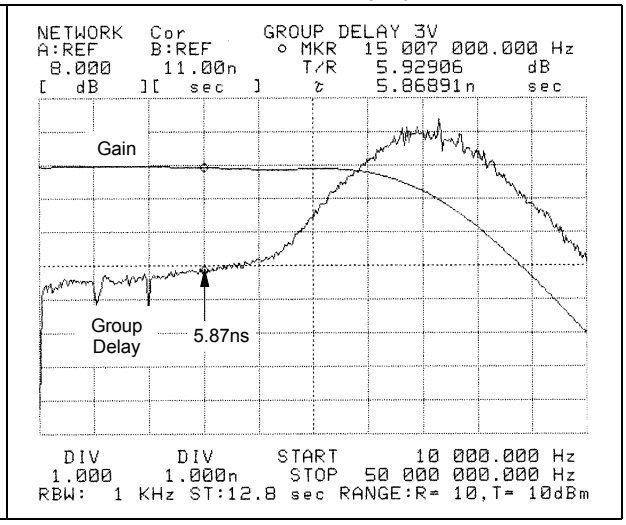

Figure 16. Third order intermodulation (gain = 2, V_{CC} = ±1.5 V, Z_L = 150 Ω // 27 pF, T_{amb} = 25 °C)

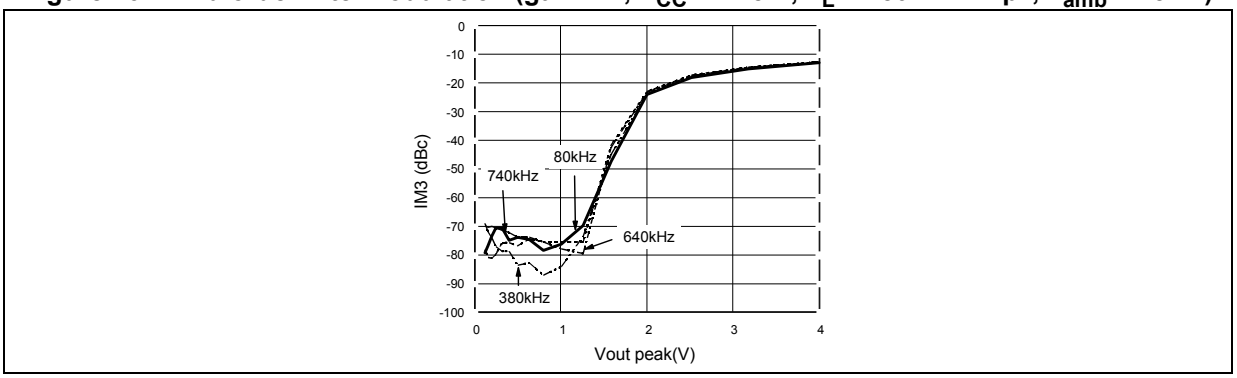

1. Note on intermodulation products:
   The IFR2026 synthesizer generates a two tone signal (F1 = 180 kHz, F2 = 280 kHz); each tone has the same amplitude level.
   The HP3585 spectrum analyzer measures the intermodulation products function of the output voltage. The generator and the spectrum analyzer are phase locked for precision considerations.

Downloaded from Arrow.com.

3.3 Characteristic curves for V_{CC} = 5 V

Figure 17. Closed loop gain and phase vs. frequency (gain = +2, V_{CC} = ±2.5 V, R_L = 150 Ω, T_{amb} = 25 °C)

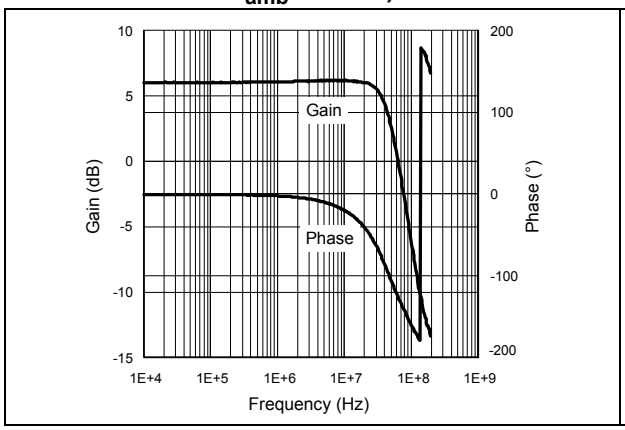

Figure 18. Overshoot function of output capacitance (gain = +2, V_{CC} = ±2.5 V, T_{amb} = 25 °C)

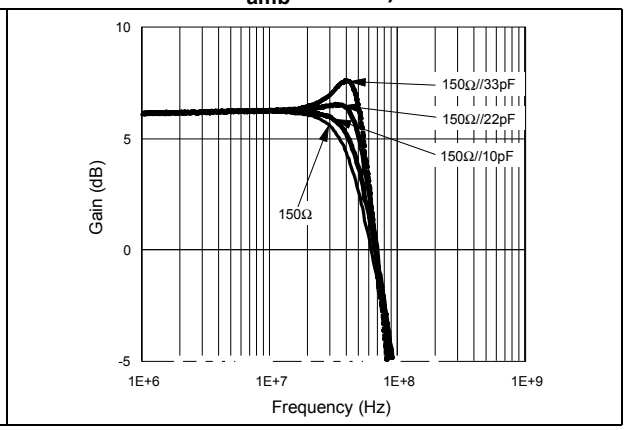

Figure 19. Closed loop gain and phase vs. frequency (gain = -10, V_{CC} = ±2.5 V, R_L = 150 Ω, T_{amb} = 25 °C)

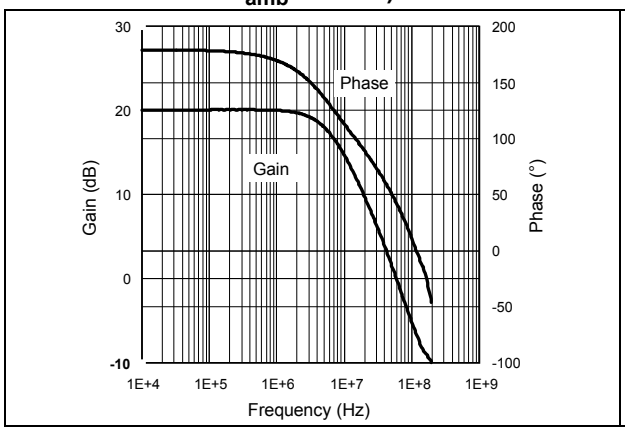

Figure 20. Closed loop gain and phase vs. frequency (gain = +11, V_{CC} = ±2.5 V, R_L = 150 Ω, T_{amb} = 25 °C)

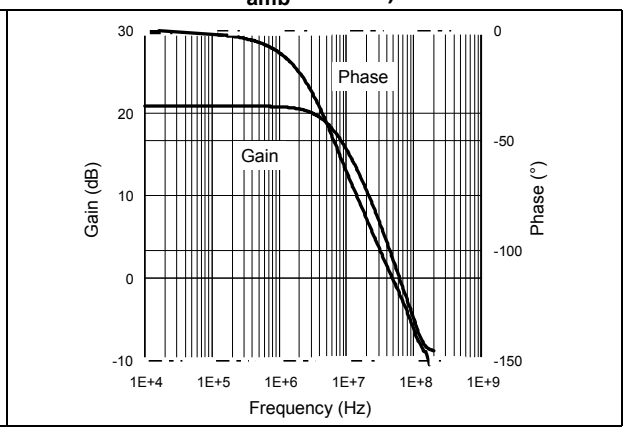

Figure 21. Large signal measurement - positive slew rate (gain = 2, V_{CC} = ±2.5 V, Z_L= 150 Ω // 5.6 pF)

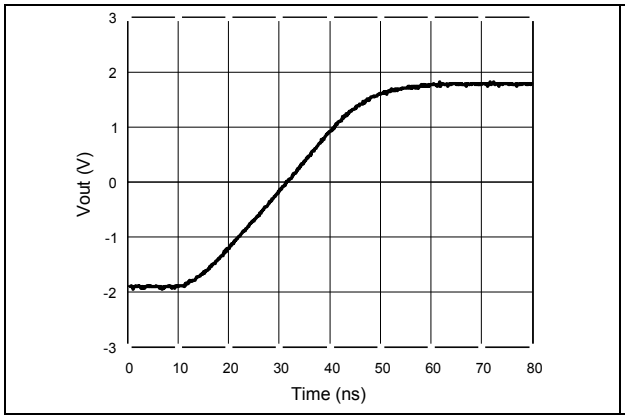

Figure 22. Large signal measurement - negative slew rate (gain = 2, V_{CC} = ±2.5 V, Z_L = 150 Ω // 5.6 pF)

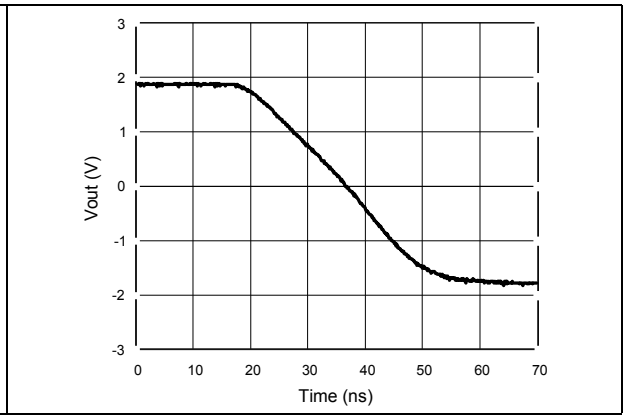

Downloaded from Arrow.com.

Figure 23. Small signal measurement - rise time (gain = 2, V_{CC} = ±2.5 V, Z_L = 150 Ω)

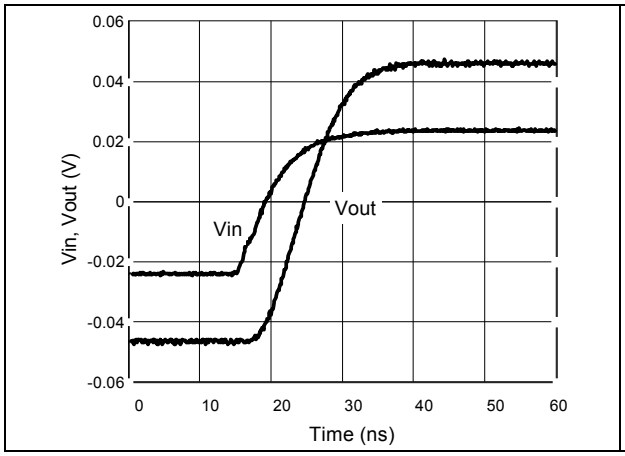

Figure 24. Small signal measurement - fall time (gain = 2, V_{CC} = ±2.5 V, Z_L= 150 Ω)

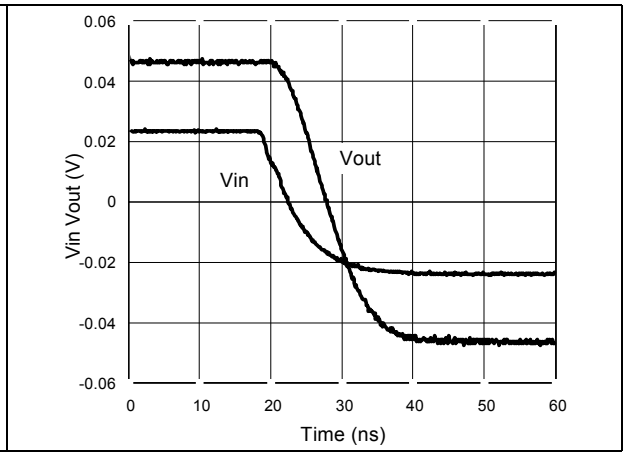

Figure 25. Channel separation (Xtalk) vs. frequency (measurement configuration: Xtalk = 20 log (V0/V1))

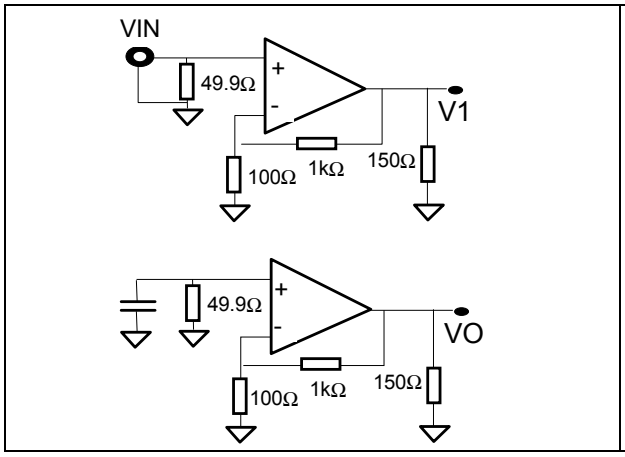

Figure 26. Channel separation (Xtalk) vs. frequency (gain = +11, V_{CC} = ±2.5 V, Z_L = 150 Ω // 27 pF)

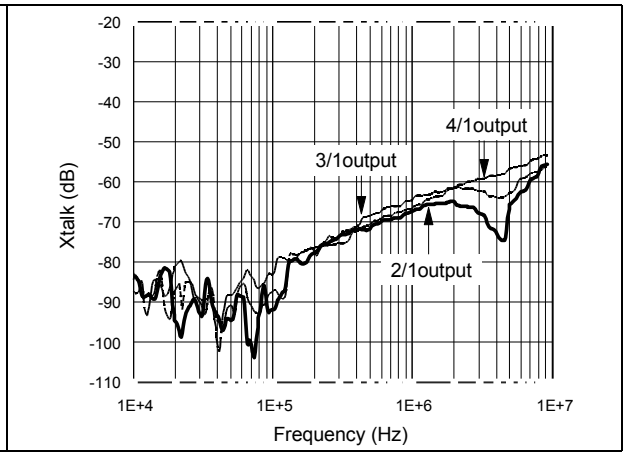

Figure 27. Equivalent noise voltage (gain = 100, V_{CC} = ±2.5 V, no load)

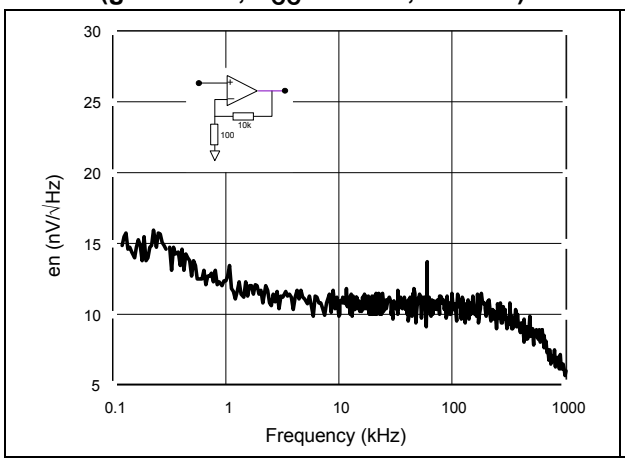

Figure 28. Maximum output swing (gain = 11, V_{CC} = ±2.5 V, R_L = 150 Ω)

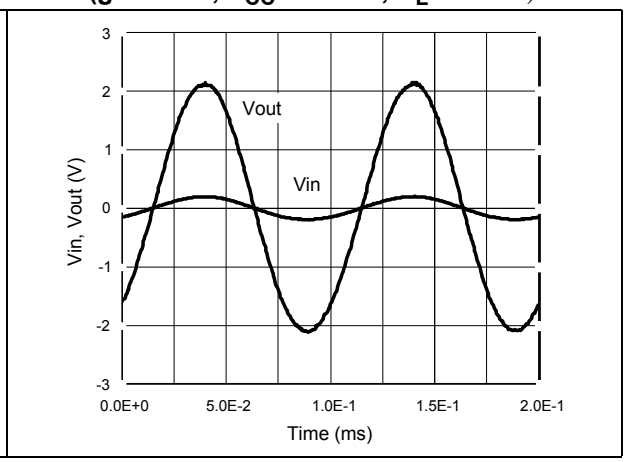

Downloaded from Arrow.com.

Figure 29. Standby mode - T_{on}, T_{off} (V_{CC} = ±2.5 V, open loop)

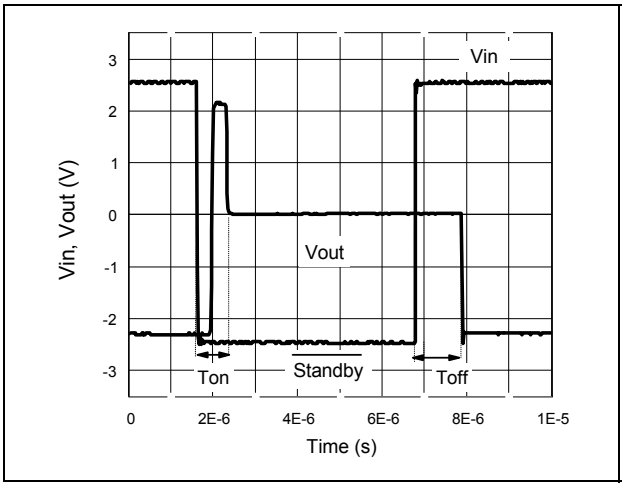

Figure 30. Group delay (gain = 2, V_{CC} = ±2.5 V, Z_L = 150 Ω // 27 pF, T_{amb} = 25 °C)

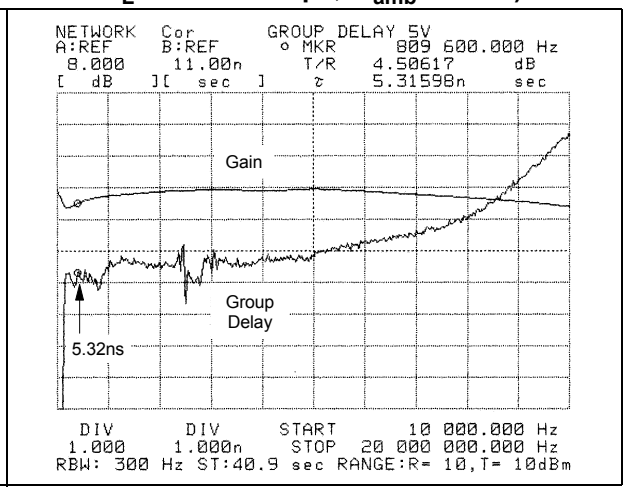

Figure 31. Third order intermodulation (gain = 2, V_{CC} = ±2.5 V, Z_L = 150 Ω // 27 pF, T_{amb} = 25 °C)

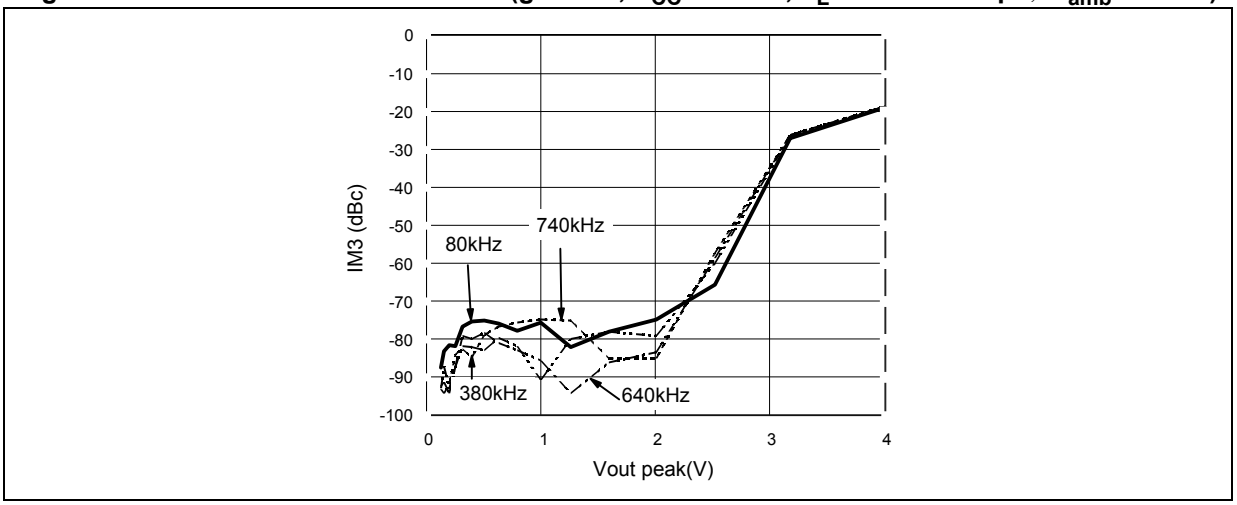

1. Note on intermodulation products:
   The IFR2026 synthesizer generates a two tone signal (F1 = 180 kHz, F2 = 280 kHz); each tone has the same amplitude level.
   The HP3585 spectrum analyzer measures the intermodulation products function of the output voltage. The generator and the spectrum analyzer are phase locked for precision considerations.

Downloaded from Arrow.com.

3.4 Characteristic curves for V_{CC} = 10 V

Figure 32. Closed loop gain and phase vs. frequency (gain = +2, V_{CC} = ±5 V, R_L = 150 Ω, T_{amb} = 25 °C)

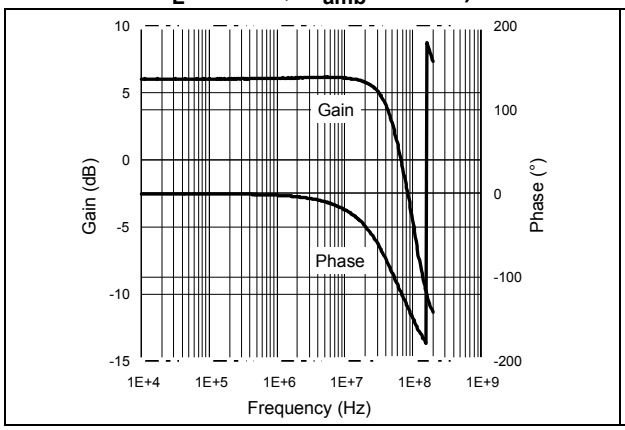

Figure 33. Overshoot function of output capacitance (gain = +2, V_{CC} = ±5 V, T_{amb} = 25 °C)

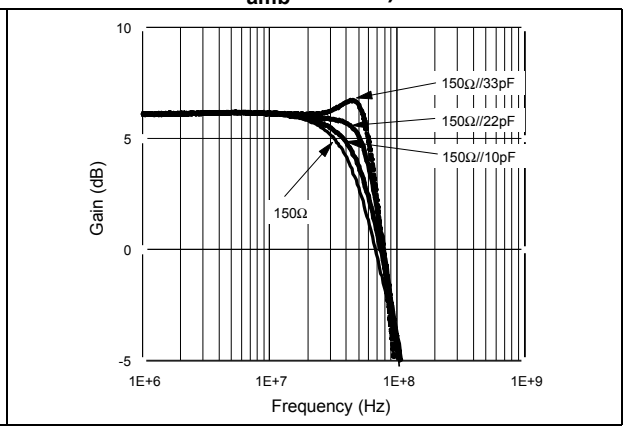

Figure 34. Closed loop gain and phase vs. frequency (gain = -10, V_{CC} = ±5 V, R_L = 150 Ω, T_{amb} = 25 °C)

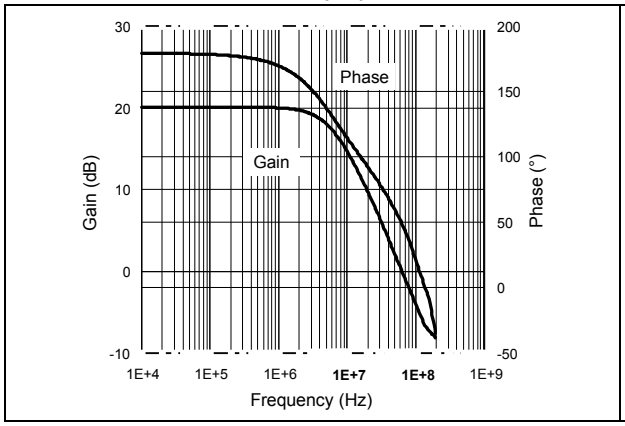

Figure 35. Closed loop gain and phase vs. frequency (gain = +11, V_{CC} = ±5 V, R_L = 150 Ω, T_{amb} = 25 °C)

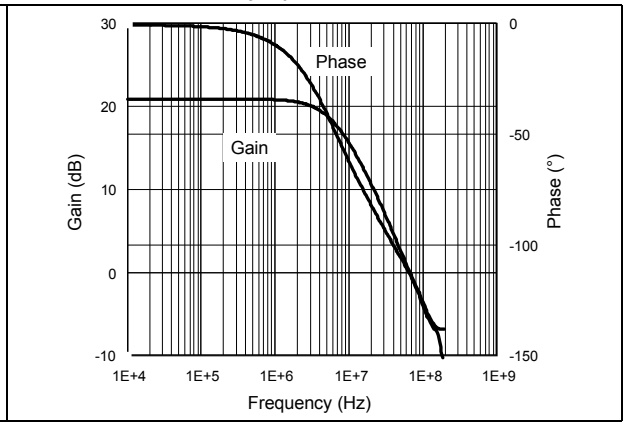

Figure 36. Large signal measurement - positive slew rate (gain = 2,V_{CC} = ±5 V, Z_L = 150 Ω // 5.6 pF)

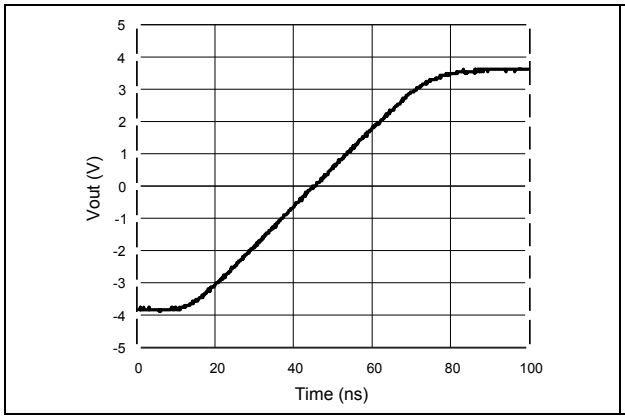

Figure 37. Large signal measurement - negative slew rate (gain = 2 V_{CC} = ±5 V, Z_L = 150 Ω // 5.6 pF)

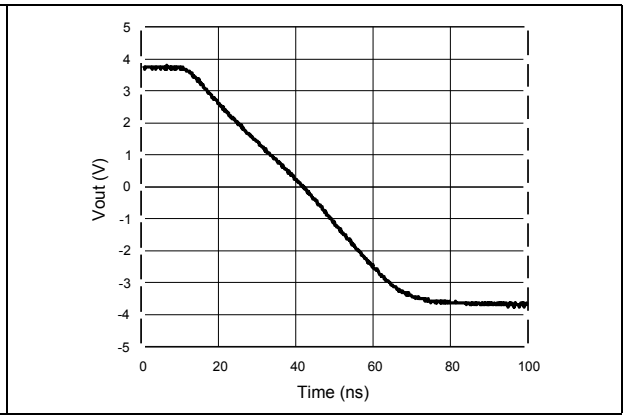

Downloaded from Arrow.com.

Figure 38. Small signal measurement - rise time (gain = 2, V_{CC} = ±5 V, Z_L = 150 Ω)

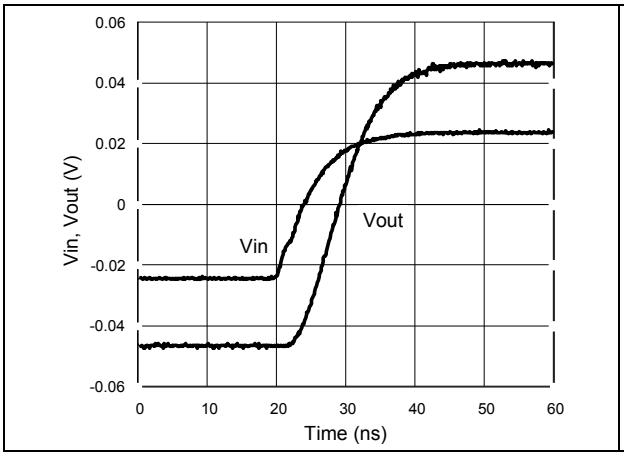

Figure 39. Small signal measurement - fall time (gain = 2, V_{CC} = ±5 V, Z_L = 150 Ω)

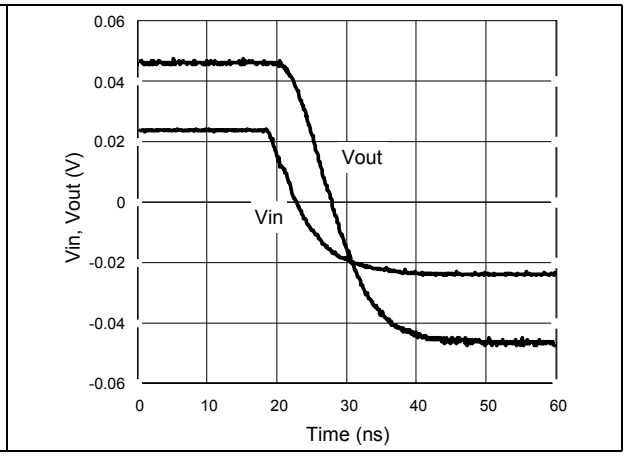

Figure 40. Channel separation (Xtalk) vs. frequency (measurement configuration: Xtalk = 20 log(V0/V1))

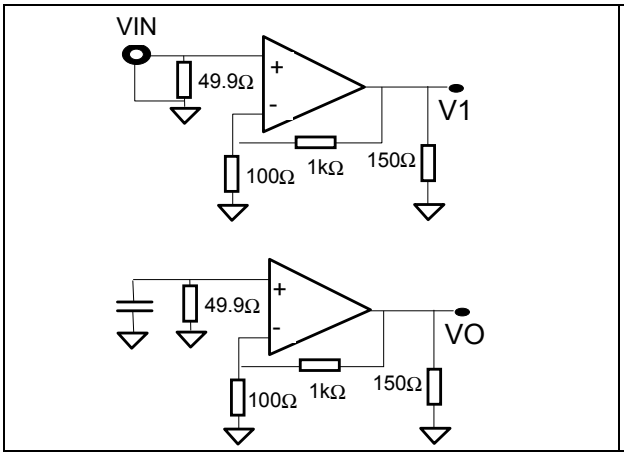

Figure 41. Channel separation (Xtalk) vs. frequency (gain = +11, V_{CC} = ±5 V, Z_L = 150 Ω // 27 pF)

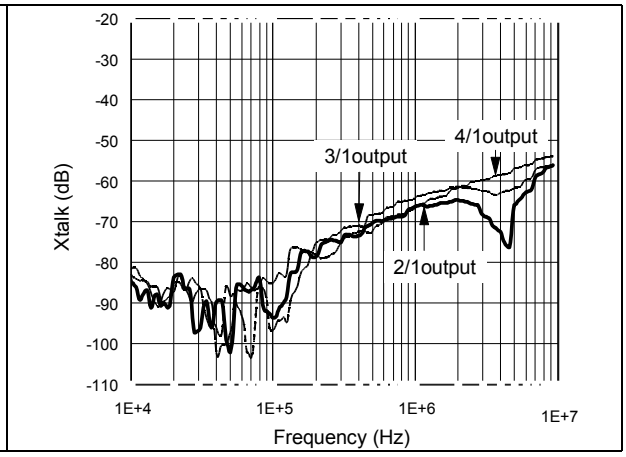

Figure 42. Equivalent noise voltage (gain = 100, V_{CC} = ±5 V, no load)

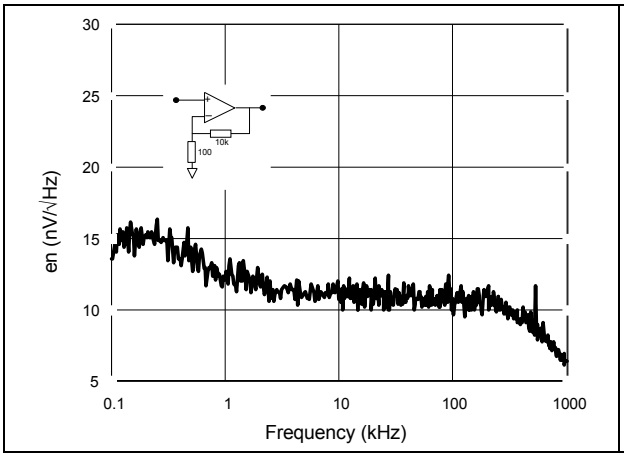

Figure 43. Maximum output swing (gain = 11, V_{CC} = ±5 V, R_L = 150 Ω)

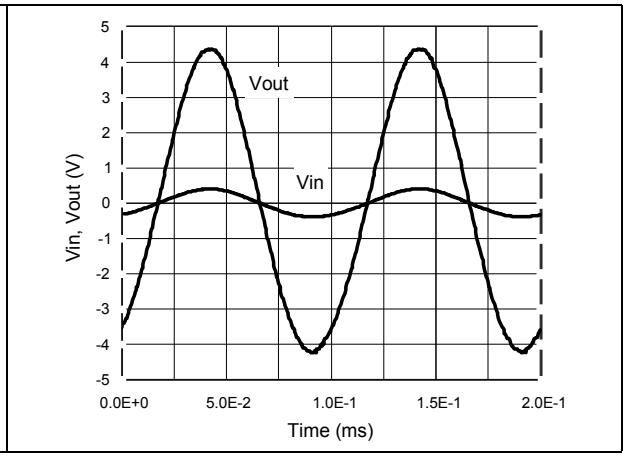

Downloaded from Arrow.com.

Figure 44. Standby mode - T_{on}, T_{off} (V_{CC} = ±5 V, open loop)

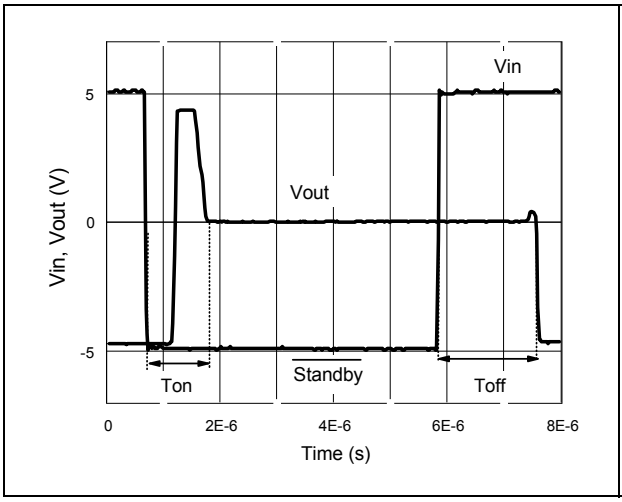

Figure 45. Group delay (gain = 2, V_{CC}= ±5 V Z_L = 150 Ω // 27 pF, T_{amb} = 25 °C)

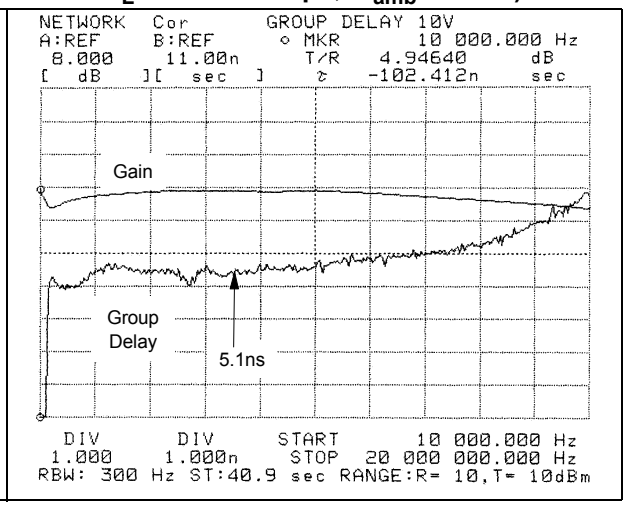

Figure 46. Third order intermodulation (gain = 2, V_{CC} = ±5 V, Z_L = 150 Ω // 27 pF, T_{amb} = 25 °C

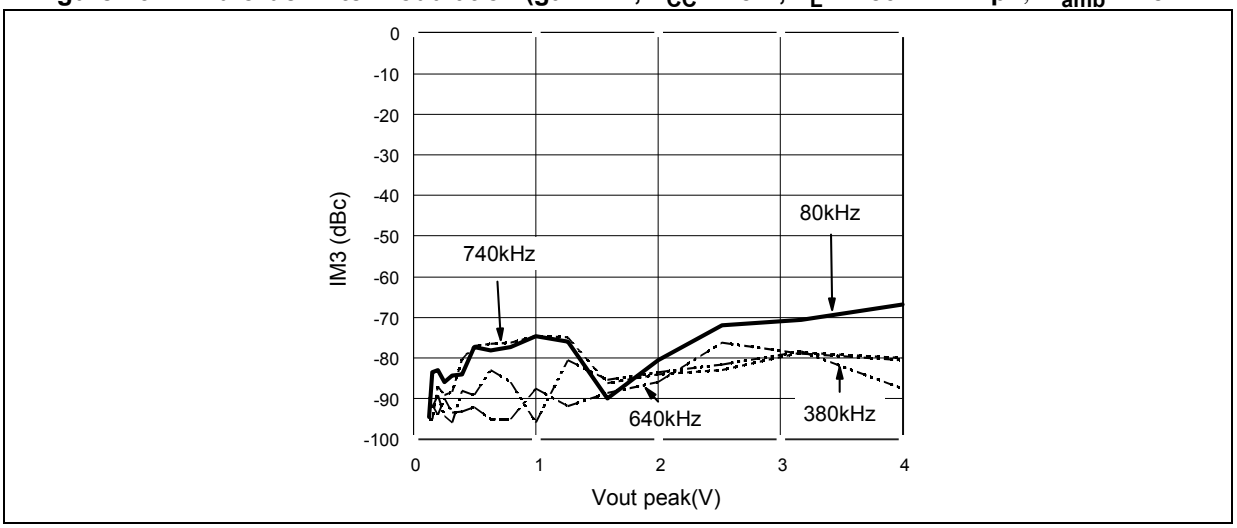

1. Note on intermodulation products:
   The IFR2026 synthesizer generates a two tone signal (F1 = 180 kHz, F2 = 280 kHz); each tone has the same amplitude level.
   The HP3585 spectrum analyzer measures the intermodulation products function of the output voltage. The generator and the spectrum analyzer are phase locked for precision considerations.

Downloaded from Arrow.com.

4 Testing conditions

4.1 Layout precautions

To use the TSH7X circuits in the best manner at high frequencies, some precautions have to be taken for power supplies:

- First of all, the implementation of a proper ground plane on both sides of the PCB is mandatory for high-speed circuit applications to provide low inductance and low resistance common return.
- Power supply bypass capacitors (4.7 µF and ceramic 100 pF) should be placed as close as possible to the IC pins in order to improve high frequency bypassing and reduce harmonic distortion. The power supply capacitors must be incorporated for both the negative and the positive pins.
- Proper termination of all inputs and outputs must be in accordance with output termination resistors. In this way, the amplifier load is resistive only, and the stability of the amplifier is improved.
- All leads must be wide and as short as possible (especially for op-amp inputs and outputs) in order to decrease parasitic capacitance and inductance.
- For lower gain applications, care should be taken to avoid large feedback resistance (> 1 kΩ) in order to reduce the time constant of parasitic capacitances.
- Choose component sizes as small as possible (SMD)
- Finally, on output, the load capacitance must be negligible to maintain good stability. You can put a serial resistance as close as possible to the output pin to minimize capacitance.

Downloaded from Arrow.com.

4.2 Maximum input level

Figure 47. CCIR330 video line

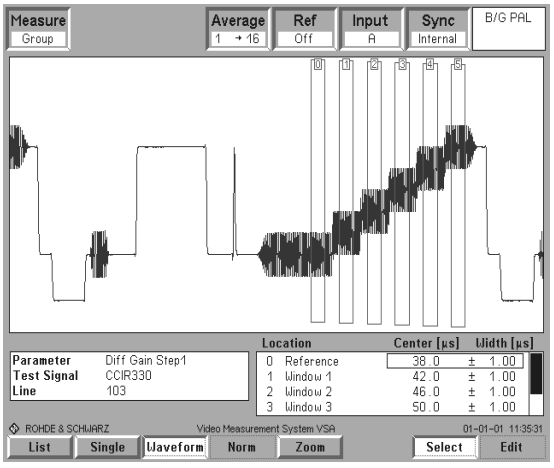

The input level must not exceed the following values:

- Negative peak: must be greater than $-V_{CC}$+400 mV
- Positive peak value: must be lower than $+V_{CC}$-400 mV

The electrical characteristics show the influence of the load on this parameter.

4.3 Video capabilities

To characterize the differential phase and differential gain, a CCIR330 video line is used.

The video line contains five (flat) levels of luma on which is superimposed a chroma signal. The first level contains no luma. The luma gives various amplitudes which define the saturation of the signal. The chrominance gives various phases which define the color of the signal.

Differential phase (respectively differential gain) distortion is present if a signal chrominance phase (gain) is affected by luminance level. They represent the ability to uniformly process the high frequency information at all luminance levels.

When differential gain is present, color saturation is not correctly reproduced.

The input generator is the Rohde and Schwarz CCVS. The output measurement was made by the Rohde and Schwarz VSA.

Downloaded from Arrow.com.

Figure 48. Measurement on Rohde and Schwarz VSA

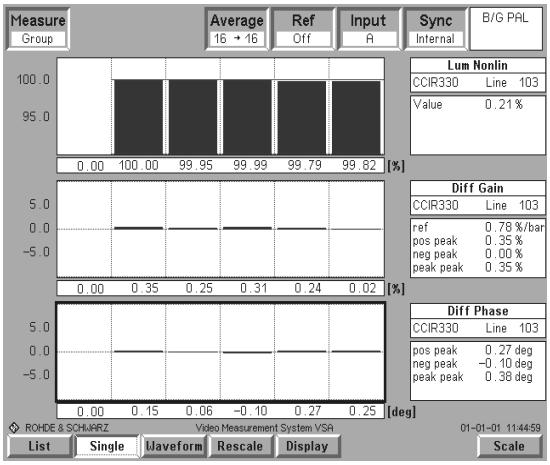

Table 10. Video results

Parameter	Value V_{CC} = ±2.5 V	Value V_{CC} = ±5 V	Unit
Lum NL	0.1	0.3	%
Lum NL step 1	100	100	
Lum NL step 2	100	99.9	
Lum NL step 3	99.9	99.8	
Lum NL step 4	99.9	99.9	
Lum NL step 5	99.9	99.7	
Diff gain pos	0	0	
Diff gain neg	-0.7	-0.6	
Diff gain pp	0.7	0.6	
Diff gain step1	-0.5	-0.3	
Diff gain step2	-0.7	-0.6	
Diff gain step3	-0.3	-0.5	
Diff gain step4	-0.1	-0.3	
Diff gain step5	-0.4	-0.5	
Diff phase pos	0	0.1	deg
Diff phase neg	-0.2	-0.4	
Diff phase pp	0.2	0.5	
Diff phase step1	-0.2	-0.4	
Diff phase step2	-0.1	-0.4	
Diff phase step3	-0.1	-0.3	
Diff phase step4	0	0.1	
Diff phase step5	-0.2	-0.1	

Downloaded from Arrow.com.

4.4 Precautions when operating on an asymmetrical supply

The TSH7X can be used with either a dual or a single supply. If a single supply is used, the inputs are biased to the mid-supply voltage ($+V_{CC}/2$). This bias network must be carefully designed, in order to reject any noise present on the supply rail.

As the bias current is 15 µA, you must carefully choose the resistance R1 so as not to introduce an offset mismatch at the amplifier inputs.

Figure 49. Schematic of asymmetrical (single) supply

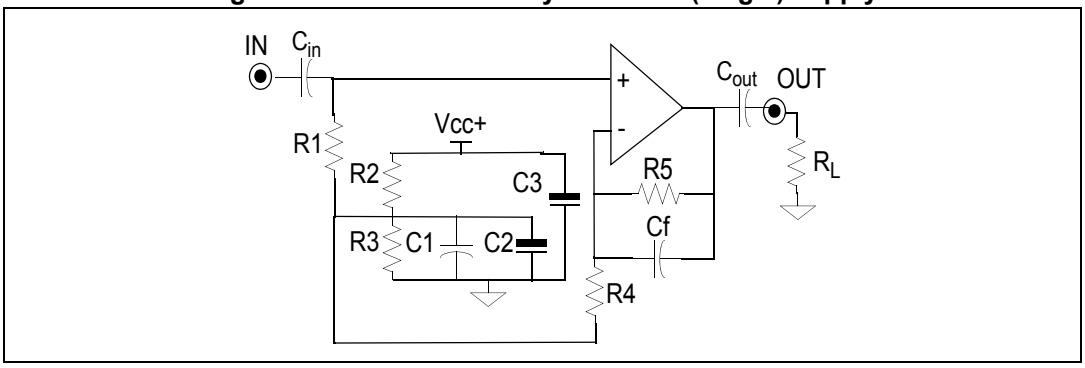

R1 = 10 kΩ is a typical and convenient value. C1, C2, C3 are bypass capacitors that filter perturbations on V_{CC}, as well as for the input and output signals. We choose C1 = 100 nF and C2 = C3 = 100 µF.

R2, R3 are such that the current through them must be greater than 100 times the bias current. Therefore, we set R2 = R3 = 4.7 kΩ

C_{in}, as C_{out}, is chosen to filter the DC signal by the low-pass filters (R1,C_{in} and R_{out}, C_{out}). By taking R1 = 10 kΩ, R_L = 150 Ω, and C_{in} = 2 µF, C_{out} = 220 µF we provide a cut-off frequency below 10 Hz.

Figure 50. Use of the TSH7x in gain = -1 configuration

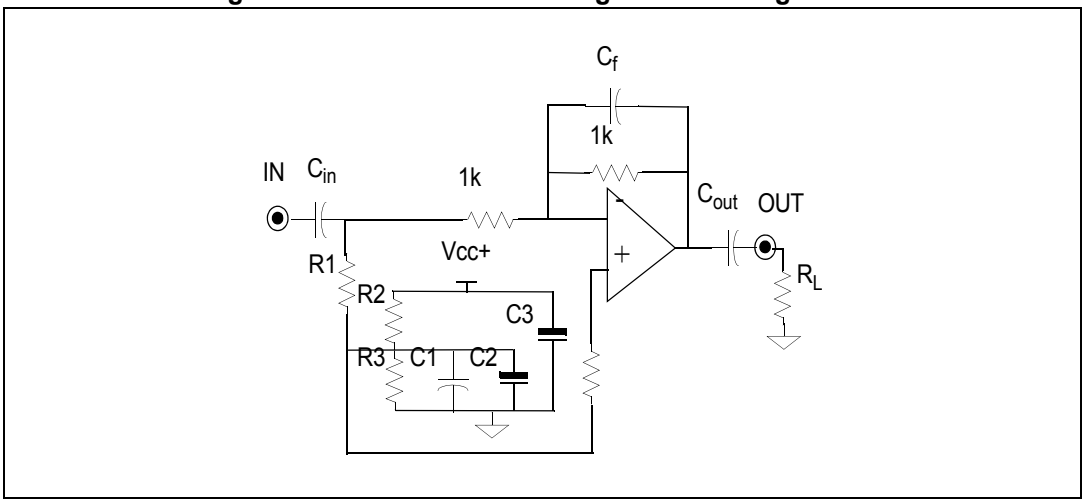

Some precautions must be taken, especially for low-power supply applications.

Downloaded from Arrow.com.

A feedback capacitance, C_f, should be added for better stability. *Table 11* summarizes the impact of the capacitance C_f on the phase margin of the circuit.

Table 11. Impact capacitance C_f

Parameter	C_f (pF)	V_{CC} = ±1.5 V	V_{CC} = ±2.5 V	V_{CC} = ±5 V	Unit
Phase margin	0	28	43	56	deg
f-3 dB		40	39.3	38.3	MHz
Phase margin	5.6	30	43	56	deg
f-3 dB		40	39.3	38.3	MHz
Phase margin	22	37	52	67	deg
f-3 dB		37	34	32	MHz
Phase margin	33	48	65	78	deg
f-3 dB		33.7	30.7	27.6	MHz

Downloaded from Arrow.com.

5 Package information

In order to meet environmental requirements, ST offers these devices in different grades of ECOPACK® packages, depending on their level of environmental compliance. ECOPACK® specifications, grade definitions and product status are available at: *www.st.com*. ECOPACK® is an ST trademark.

Downloaded from Arrow.com.

5.1 SOT23-5 package information

Figure 51. SOT23-5 package mechanical drawing

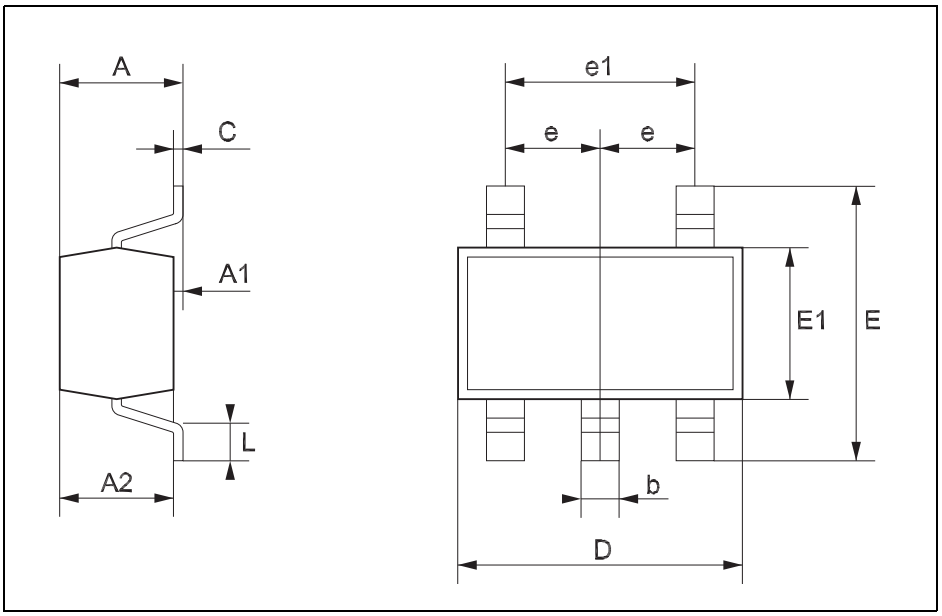

Table 12. SOT23-5 package mechanical data

Symbol	Dimensions					
	Millimeters			Inches		
	Min	Typ	Max	Min	Typ	Max
A	0.90		1.45	0.035		0.057
A1	0.00		0.15	0.000		0.006
A2	0.90		1.30	0.035		0.051
b	0.35		0.50	0.014		0.020
C	0.09		0.20	0.004		0.008
D	2.80		3.00	0.110		0.118
E	2.60		3.00	0.102		0.118
E1	1.50		1.75	0.059		0.069
e		0.95			0.037	
e1		1.9			0.075	
L	0.35		0.55	0.014		0.022

Downloaded from Arrow.com.

5.2 SO8 package information

Figure 52. SO8 package mechanical drawing

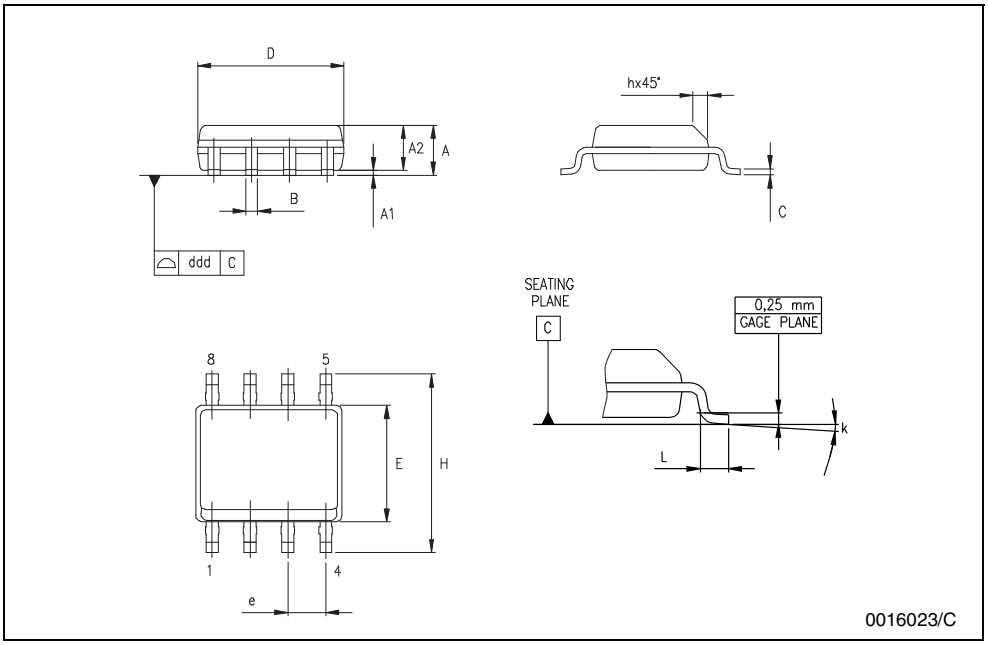

Table 13. SO8 package mechanical data

Symbol	Dimensions					
	Millimeters			Inches		
	Min	Typ	Max	Min	Typ	Max
A	1.35		1.75	0.053		0.069
A1	0.10		0.25	0.004		0.010
A2	1.10		1.65	0.043		0.065
B	0.33		0.51	0.013		0.020
C	0.19		0.25	0.007		0.010
D	4.80		5.00	0.189		0.197
E	3.80		4.00	0.150		0.157
e		1.27			0.050	
H	5.80		6.20	0.228		0.244
h	0.25		0.50	0.010		0.020
L	0.40		1.27	0.016		0.050
k			8 °			8 °
ddd			0.1			0.004

Downloaded from Arrow.com.

5.3 TSSOP8 package information

Figure 53. TSSOP8 package mechanical drawing

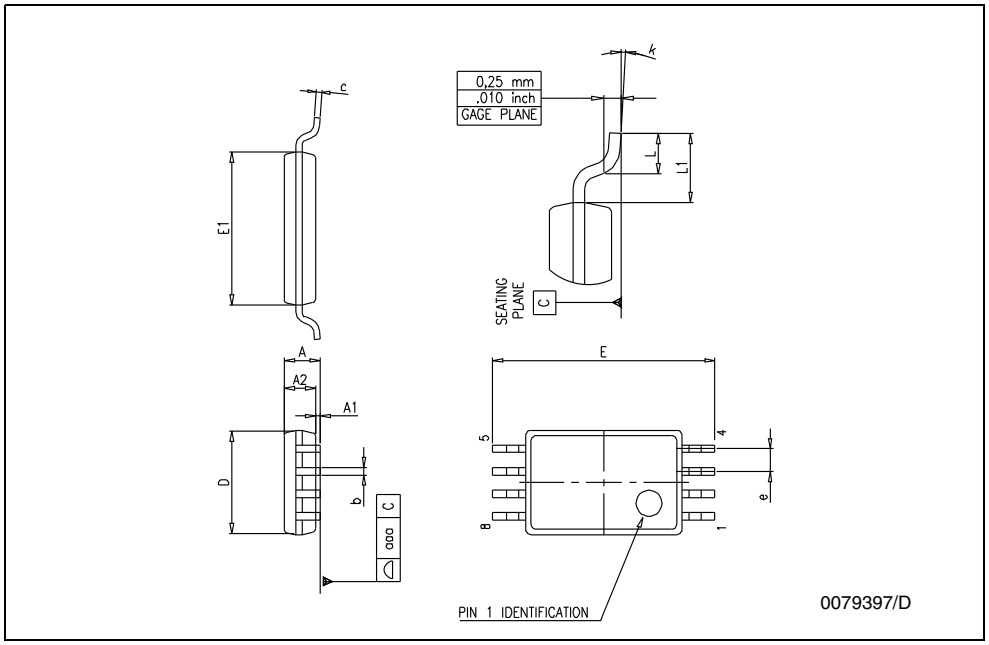

Table 14. TSSOP8 package mechanical data

Symbol	Dimensions					
	Millimeters			Inches		
	Min	Typ	Max	Min	Typ	Max
A			1.2			0.047
A1	0.05		0.15	0.002		0.006
A2	0.80	1.00	1.05	0.031	0.039	0.041
b	0.19		0.30	0.007		0.012
c	0.09		0.20	0.004		0.008
D	2.90	3.00	3.10	0.114	0.118	0.122
E	6.20	6.40	6.60	0.244	0.252	0.260
E1	4.30	4.40	4.50	0.169	0.173	0.177
e		0.65			0.0256	
K	0 °		8 °	0 °		8 °
L	0.45	0.60	0.75	0.018	0.024	0.030
L1		1			0.039	

Downloaded from Arrow.com.

5.4 SO14 package information

Figure 54. SO14 package mechanical drawing

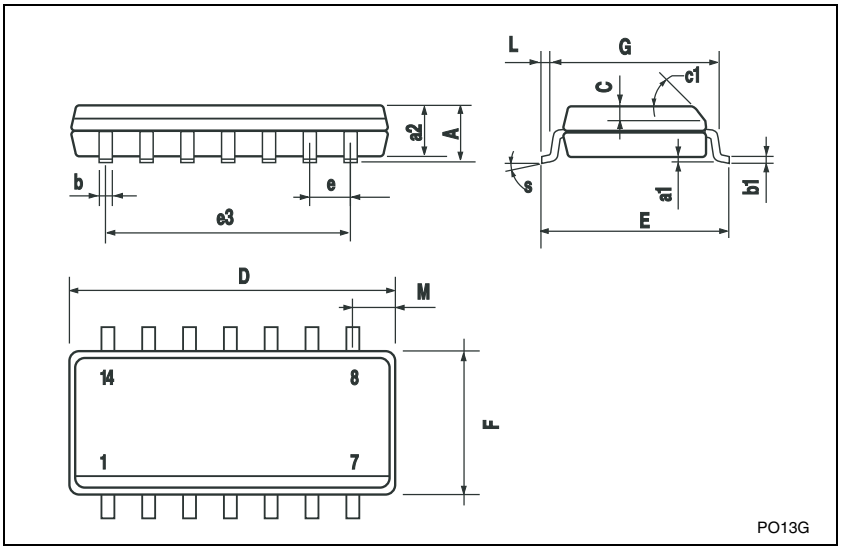

Table 15. SO14 package mechanical data

Symbol	Dimensions					
	Millimeters			Inches		
	Min	Typ	Max	Min	Typ	Max
A			1.75			0.068
a1	0.1		0.2	0.003		0.007
a2			1.65			0.064
b	0.35		0.46	0.013		0.018
b1	0.19		0.25	0.007		0.010
C		0.5			0.019	
c1		45 °			45 °	
D	8.55		8.75	0.336		0.344
E	5.8		6.2	0.228		0.244
e		1.27			0.050	
e3		7.62			0.300	
F	3.8		4.0	0.149		0.157
G	4.6		5.3	0.181		0.208
L	0.5		1.27	0.019		0.050
M			0.68			0.026
S			8 °			8 °

Downloaded from Arrow.com.

5.5 TSSOP14 package information

Figure 55. TSSOP14 package mechanical drawing

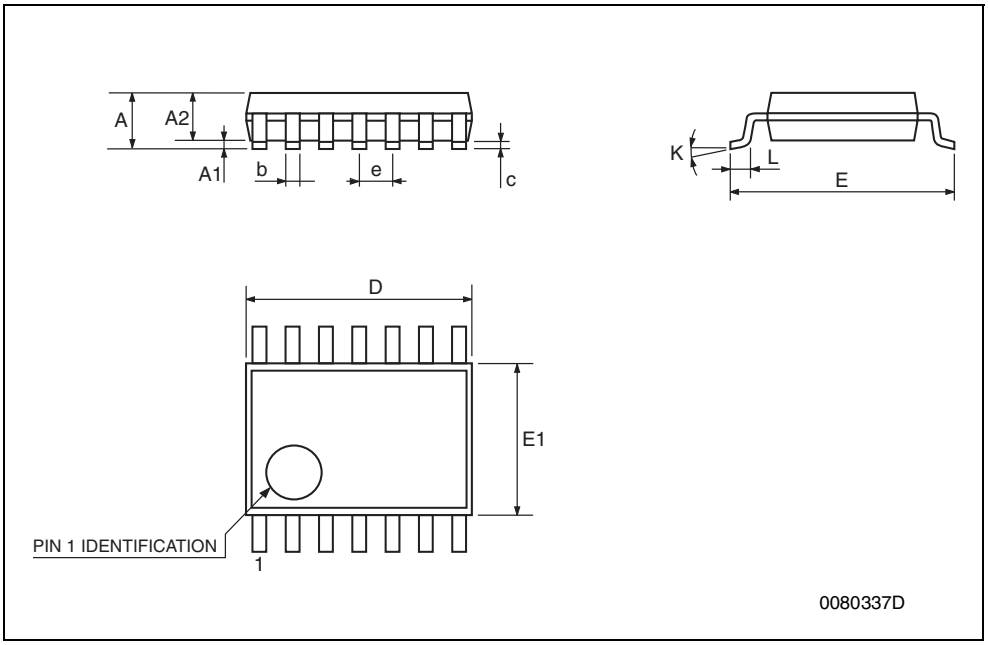

Table 16. TSSOP14 package mechanical data

Symbol	Dimensions					
	Millimeters			Inches		
	Min	Typ	Max	Min	Typ	Max
A			1.2			0.047
A1	0.05		0.15	0.002	0.004	0.006
A2	0.8	1	1.05	0.031	0.039	0.041
b	0.19		0.30	0.007		0.012
c	0.09		0.20	0.004		0.0089
D	4.9	5	5.1	0.193	0.197	0.201
E	6.2	6.4	6.6	0.244	0.252	0.260
E1	4.3	4.4	4.48	0.169	0.173	0.176
e		0.65			0.0256	
K	0 °		8 °	0 °		8 °
L	0.45	0.60	0.75	0.018	0.024	0.030

Downloaded from Arrow.com.

5.6 SO16 package information

Figure 56. SO16 package mechanical drawing

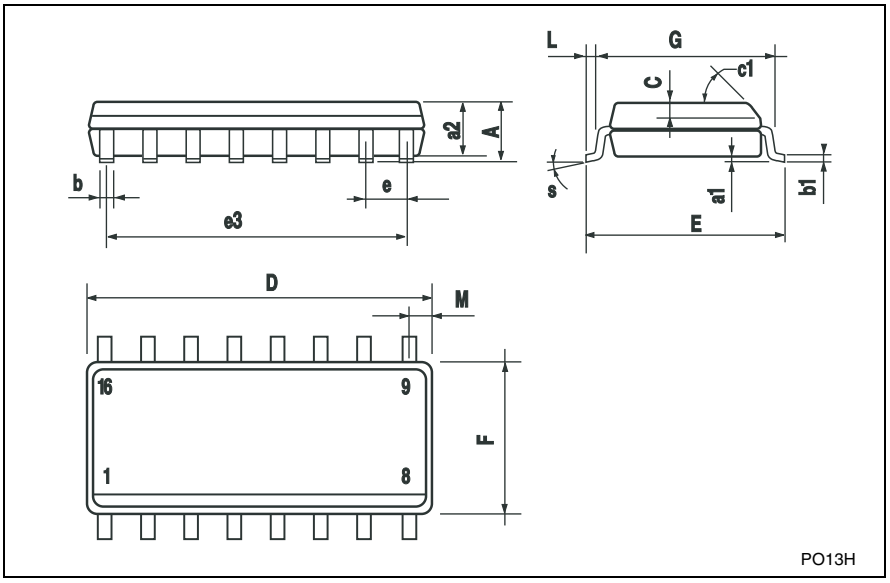

Table 17. SO16 package mechanical data

Symbol	Dimensions					
	Millimeters			Inches		
	Min	Typ	Max	Min	Typ	Max
A			1.75			0.068
a1	0.1		0.2	0.004		0.008
a2			1.65			0.064
b	0.35		0.46	0.013		0.018
b1	0.19		0.25	0.007		0.010
C		0.5			0.019	
c1		45 °			45 °	
D	9.8			0.385		0.393
E	5.8		10	0.228		0.244
e		1.27	6.2		0.050	
e3		8.89			0.350	
F	3.8		4.0	0.149		0.157
G	4.6		5.3	0.181		0.208
L	0.5		1.27	0.019		0.050
M			0.62			0.024
S			8 °			8 °

Downloaded from Arrow.com.

5.7 TSSOP16 package information

Figure 57. TSSOP16 package mechanical drawing

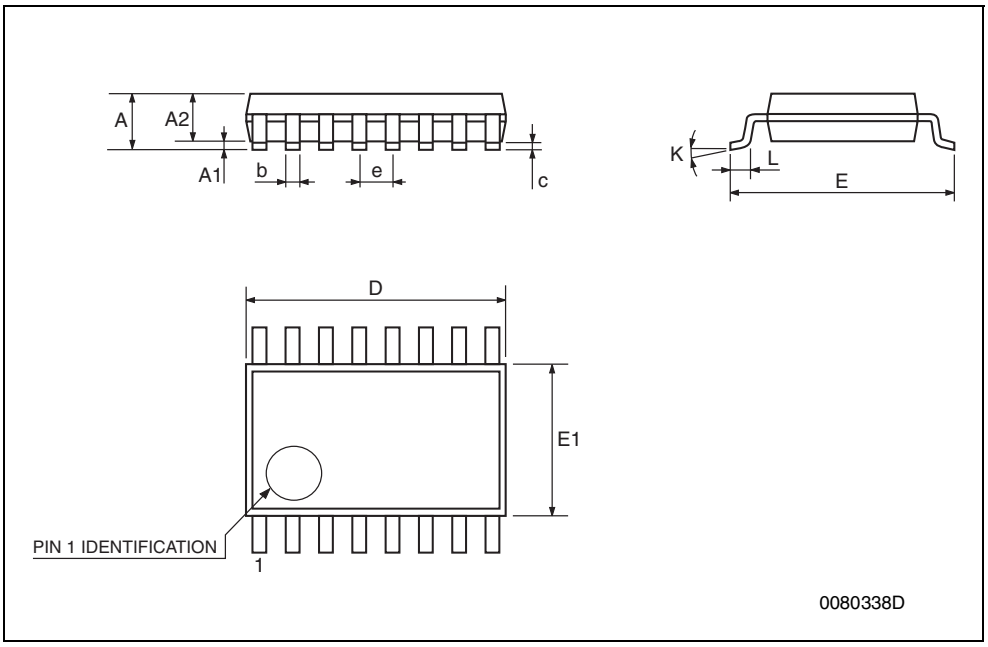

Table 18. TSSOP16 package mechanical data

Symbol	Dimensions					
	Millimeters			Inches		
	Min	Typ	Max	Min	Typ	Max
A			1.2			0.047
A1	0.05		0.15	0.002		0.006
A2	0.8	1	1.05	0.031	0.039	0.041
b	0.19		0.30	0.007		0.012
c	0.09		0.20	0.004		0.0079
D	4.9	5	5.1	0.193	0.197	0.201
E	6.2	6.4	6.6	0.244	0.252	0.260
E1	4.3	4.4	4.48	0.169	0.173	0.176
e		0.65			0.0256	
K	0 °		8 °	0 °		8 °
L	0.45	0.60	0.75	0.018	0.024	0.030

Downloaded from Arrow.com.

6 Order information

Table 19. Order codes

Part number	Temperature range	Package	Packing	Marking
TSH70CLT	0 °C to 70 °C	SOT23-5	Tape and reel	K301
TSH70CD/CDT		SO8	Tube or tape and reel	70C
TSH71CD/CDT				71C
TSH71CPT		TSSOP8	Tape and reel	
TSH72CD/CDT		SO8	Tube or tape and reel	72C
TSH72CPT		TSSOP8	Tape and reel	
TSH73CD/CDT		SO14	Tube or tape and reel	73C
TSH73CPT		TSSOP14	Tape and reel	
TSH74CD/CDT		SO14	Tube or tape and reel	74C
TSH74CPT		TSSOP14	Tape and reel	
TSH75CD/CDT		SO16	Tube or tape and reel	75C
TSH75CPT		TSSOP16	Tape and reel	

Downloaded from Arrow.com.

7 Revision history

Table 20. Document revision history

Date	Revision	Changes
Nov. 2000	1	First Release.
Aug. 2002	2	Limit min. of I_{sink} from 24mA to 20mA (only on 3V power supply). Reason: yield improvement.
May 2006	3	Improvement of VOL max. at 3V and 5V power supply on 150-ohm load connected to GND (pages 6 and 8). Reason: TSH7x can drive video signals from DACs to lines in single supply (3V or 5V) without any DC level change of the video signals. Grammatical and typographical changes throughout. Package mechanical data updated.
05-Dec-2013	4	Updated slew rate in *Features* *Table 12: SOT23-5 package mechanical data*: added information for inches.

Downloaded from Arrow.com.

Please Read Carefully:

Information in this document is provided solely in connection with ST products. STMicroelectronics NV and its subsidiaries (“ST”) reserve the right to make changes, corrections, modifications or improvements, to this document, and the products and services described herein at any time, without notice.

All ST products are sold pursuant to ST’s terms and conditions of sale.

Purchasers are solely responsible for the choice, selection and use of the ST products and services described herein, and ST assumes no liability whatsoever relating to the choice, selection or use of the ST products and services described herein.

No license, express or implied, by estoppel or otherwise, to any intellectual property rights is granted under this document. If any part of this document refers to any third party products or services it shall not be deemed a license grant by ST for the use of such third party products or services, or any intellectual property contained therein or considered as a warranty covering the use in any manner whatsoever of such third party products or services or any intellectual property contained therein.

UNLESS OTHERWISE SET FORTH IN ST’S TERMS AND CONDITIONS OF SALE ST DISCLAIMS ANY EXPRESS OR IMPLIED WARRANTY WITH RESPECT TO THE USE AND/OR SALE OF ST PRODUCTS INCLUDING WITHOUT LIMITATION IMPLIED WARRANTIES OF MERCHANTABILITY, FITNESS FOR A PARTICULAR PURPOSE (AND THEIR EQUIVALENTS UNDER THE LAWS OF ANY JURISDICTION), OR INFRINGEMENT OF ANY PATENT, COPYRIGHT OR OTHER INTELLECTUAL PROPERTY RIGHT.

ST PRODUCTS ARE NOT DESIGNED OR AUTHORIZED FOR USE IN: (A) SAFETY CRITICAL APPLICATIONS SUCH AS LIFE SUPPORTING, ACTIVE IMPLANTED DEVICES OR SYSTEMS WITH PRODUCT FUNCTIONAL SAFETY REQUIREMENTS; (B) AERONAUTIC APPLICATIONS; (C) AUTOMOTIVE APPLICATIONS OR ENVIRONMENTS, AND/OR (D) AEROSPACE APPLICATIONS OR ENVIRONMENTS. WHERE ST PRODUCTS ARE NOT DESIGNED FOR SUCH USE, THE PURCHASER SHALL USE PRODUCTS AT PURCHASER’S SOLE RISK, EVEN IF ST HAS BEEN INFORMED IN WRITING OF SUCH USAGE, UNLESS A PRODUCT IS EXPRESSLY DESIGNATED BY ST AS BEING INTENDED FOR “AUTOMOTIVE, AUTOMOTIVE SAFETY OR MEDICAL” INDUSTRY DOMAINS ACCORDING TO ST PRODUCT DESIGN SPECIFICATIONS. PRODUCTS FORMALLY ESCC, QML OR JAN QUALIFIED ARE DEEMED SUITABLE FOR USE IN AEROSPACE BY THE CORRESPONDING GOVERNMENTAL AGENCY.

Resale of ST products with provisions different from the statements and/or technical features set forth in this document shall immediately void any warranty granted by ST for the ST product or service described herein and shall not create or extend in any manner whatsoever, any liability of ST.

ST and the ST logo are trademarks or registered trademarks of ST in various countries.
Information in this document supersedes and replaces all information previously supplied.
The ST logo is a registered trademark of STMicroelectronics. All other names are the property of their respective owners.

© 2013 STMicroelectronics - All rights reserved

STMicroelectronics group of companies

Australia - Belgium - Brazil - Canada - China - Czech Republic - Finland - France - Germany - Hong Kong - India - Israel - Italy - Japan - Malaysia - Malta - Morocco - Philippines - Singapore - Spain - Sweden - Switzerland - United Kingdom - United States of America

www.st.com

Downloaded from Arrow.com.