A
board drillings

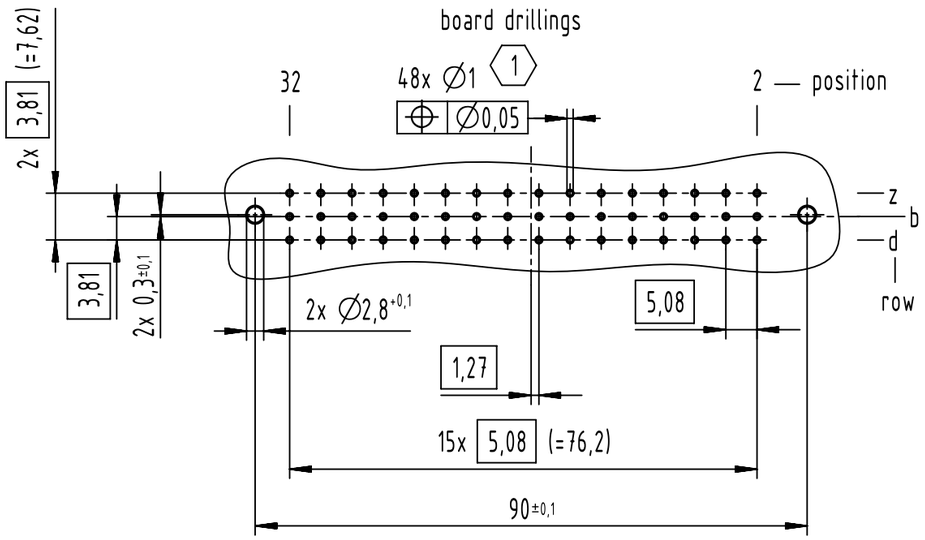

A
contact arrangement

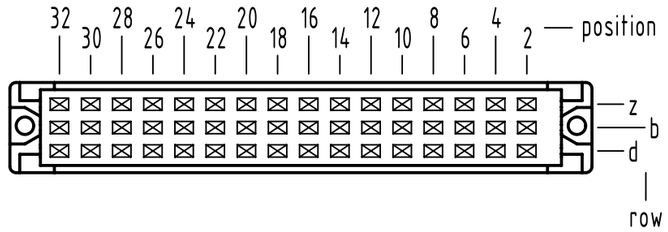

48 press-in contacts

⊠ = position with contact

□ = position without contact

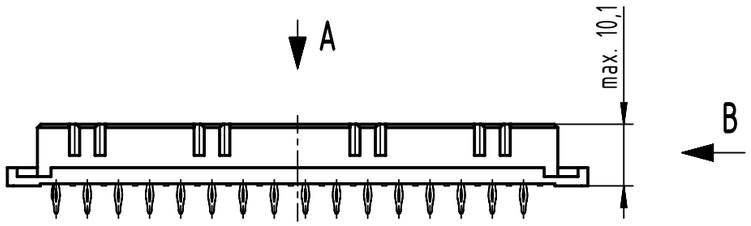

B (2:1)

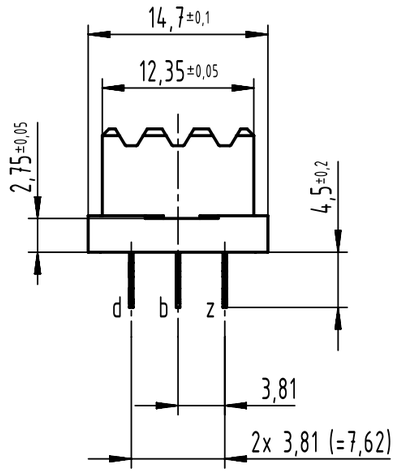

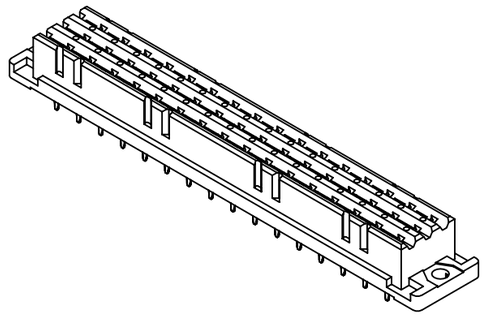

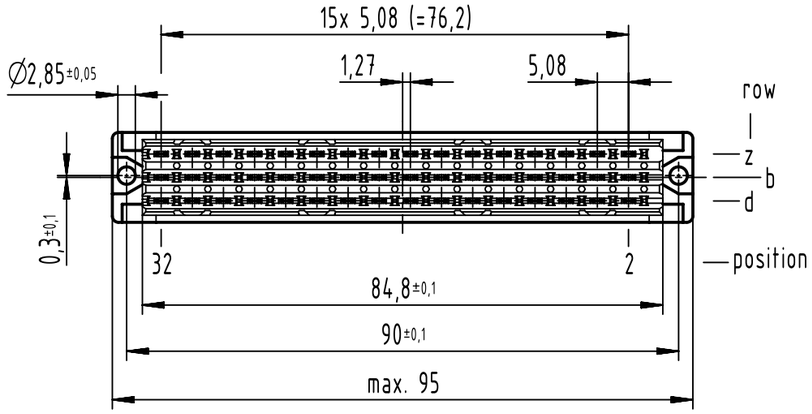

1 recommended configuration of plated through holes and further information see product data sheet

part no.	performance level
09 06 248 7832	3
09 06 248 6832	2
09 06 248 2832	1

All Dimensions in mm
Original Size DIN A3

Scale 1:1

Free size tol. complementary IEC 60603-2

Ref.

Sub.

All rights reserved

Department EL PD

Created by STORCK | Inspected by LEHNERT | Standardisation 302077 | Date 2021-06-15 | State Final Release

Title DIN Power type F low-profile female press-in 48-pole

Doc-Key / ECM-Nr. 100205271/UGD/018/E 500000191284

HARTING
D-32339 Espelkamp

Type TB | Number 0906248X832 | Rev. E | Page 1/1

A3

Downloaded from Arrow.com.