ABSOLUTE MAXIMUM RATINGS

V_{CC} to GND .....-0.3V to +4V
PWM1, PWM2, TACH1, and TACH2 to GND .....-0.3V to +13.5V
DXP1 and DXP2 to GND .....-0.3V to +(V_{CC} + 0.3V)
DXN to GND .....-0.3V to +0.8V
SCL, SDA, $\overline{\text{THERM}}$, $\overline{\text{OT}}$, $\overline{\text{FANFAIL}}$, ADD, and $\overline{\text{ALERT}}$ to GND .....-0.3V to +6V
SDA, $\overline{\text{OT}}$, $\overline{\text{THERM}}$, $\overline{\text{ALERT}}$, $\overline{\text{FANFAIL}}$, PWM1, and PWM2 Current .....-1mA to +50mA
DXN Current .....±1mA
ESD Protection (all pins, Human Body Model) 2000V

Continuous Power Dissipation (T_A = +70°C)
16-Pin QSOP (derated 8.3mW/°C above +70°C) 667mW
16-Pin TQFN 5mm x 5mm (derated at 33.3mW/°C above +70°C).....2666.7mW
Operating Temperature Range .....-40°C to +125°C
Junction Temperature .....+150°C
Storage Temperature Range .....-65°C to +150°C
Lead Temperature (soldering, 10s) .....+300°C
Soldering Temperature (reflow) .....+260°C

Stresses beyond those listed under "Absolute Maximum Ratings" may cause permanent damage to the device. These are stress ratings only, and functional operation of the device at these or any other conditions beyond those indicated in the operational sections of the specifications is not implied. Exposure to absolute maximum rating conditions for extended periods may affect device reliability.

ELECTRICAL CHARACTERISTICS

(V_{CC} = +3.0V to +3.6V, T_A = 0°C to +125°C, unless otherwise noted. Typical values are at V_{CC} = +3.3V, T_A = +85°C.) (Note 1)

PARAMETER	SYMBOL	CONDITIONS	MIN	TYP	MAX	UNITS
Operating Supply Voltage Range	V_{CC}		+3.0		+3.6	V
Standby Current		SMB static, sleep mode		3	10	µA
Operating Current		Interface inactive, ADC active		0.5	1	mA
External Temperature Error MAX6639AEE, MAX6639ATE: n = 1.008 MAX6639FAEE: n = 1.021		V_{CC} = +3.3V, +60°C ≤ T_A ≤ +100°C and +60°C ≤ T_R ≤ +100°C	-1.0		+1.0	°C
		V_{CC} = +3.3V, +40°C ≤ T_A ≤ +100°C and 0°C ≤ T_R ≤ +145°C	-2.5		+2.5	
		V_{CC} = +3.3V, 0°C ≤ T_R ≤ +145°C	-3.8		+3.8	
Internal Temperature Error MAX6639AEE, MAX6639ATE		V_{CC} = +3.3V, +25°C ≤ T_A ≤ +100°C	-2.0		+2.0	°C
		V_{CC} = +3.3V, 0°C ≤ T_A ≤ +125°C	-4.0		+4.0	
Internal Temperature Error MAX6639FAEE		V_{CC} = +3.3V, +25°C ≤ T_A ≤ +100°C	-7.7		-2.5	°C
		V_{CC} = +3.3V, 0°C ≤ T_A ≤ +125°C	-10.4		-0.1	
Supply Sensitivity of Temperature Measurement				±0.2		°C/V
Temperature Resolution				+0.125		°C
				11		Bits
Conversion Time				125		ms
Conversion-Rate Timing Error			-10		+10	%
PWM Frequency Error			-10		+10	%
Tachometer Accuracy		T_A = +60°C to +100°C			±3	%
Remote-Diode Sourcing Current		High level	70	100	130	µA
		Low level	7.0	10	13.0	
DXN Source Voltage				0.7		V

Downloaded from Arrow.com.

ELECTRICAL CHARACTERISTICS (continued)

(V_{CC} = +3.0V to +3.6V, T_A = 0°C to +125°C, unless otherwise noted. Typical values are at V_{CC} = +3.3V, T_A = +85°C.) (Note 1)

PARAMETER	SYMBOL	CONDITIONS	MIN	TYP	MAX	UNITS
DIGITAL INPUTS AND OUTPUTS						
Output Low Voltage (Sink Current) ($\overline{OT}$, $\overline{ALERT}$, $\overline{FANFAIL}$, $\overline{THERM}$, SDA, PWM1, and PWM2)	V_{OL}	$\overline{ALERT}$, $\overline{FANFAIL}$, $\overline{THERM}$, $\overline{OT}$, SDA I_{SINK} = 6mA			0.4	V
		PWM1, PWM2, I_{SINK} = 4mA			0.4	
Output High Leakage Current ($\overline{OT}$, $\overline{ALERT}$, $\overline{FANFAIL}$, $\overline{THERM}$, SDA, PWM1, and PWM2)	I_{OH}				1	µA
Logic-Low Input Voltage (SDA, SCL, $\overline{THERM}$, TACH1, TACH2)	V_{IL}				0.8	V
Logic-High Input Voltage (SDA, SCL, $\overline{THERM}$, TACH1, TACH2)	V_{IH}	V_{CC} = 3.3V	2.1			V
Input Leakage Current (SDA, SCL, $\overline{THERM}$, TACH1, TACH2)		V_{IN} = V_{CC} or GND			1	µA
Input Capacitance	C_{IN}			5		pF
SMBus TIMING (Note 2)						
Serial Clock Frequency	f_{SCL}	(Note 3)	10		100	kHz
Clock Low Period	t_{LOW}	10% to 10%	4			µs
Clock High Period	t_{HIGH}	90% to 90%	4.7			µs
Bus Free Time Between STOP and START Conditions	t_{BUF}		4.7			µs
SMBus START Condition Setup Time	$t_{SU:STA}$	90% of SMBCLK to 90% of SMBDATA	4.7			µs
START Condition Hold Time	$t_{HD:STO}$	10% of SDA to 10% of SCL	4			µs
STOP Condition Setup Time	$t_{SU:STO}$	90% of SCL to 10% of SDA	4			µs
Data Setup Time	$t_{SU:DAT}$	10% of SDA to 10% of SCL	250			ns
Data Hold Time	$t_{HD:DAT}$	10% of SCL to 10% of SDA (Note 4)	300			ns
SMBus Fall Time	t_F				300	ns
SMBus Rise Time	t_R				1000	ns
SMBus Timeout	$t_{TIMEOUT}$		58	74	90	ms

Note 1: All parameters tested at a single temperature. Specifications are guaranteed by design.
Note 2: Timing specifications guaranteed by design.
Note 3: The serial interface resets when SCL is low for more than $t_{TIMEOUT}$.
Note 4: A transition must internally provide at least a hold time to bridge the undefined region (300ns max) of SCL's falling edge.

Downloaded from Arrow.com.

Typical Operating Characteristics

(V_{CC} = 3.3V, T_A = +25°C.)

STANDBY SUPPLY CURRENT vs. SUPPLY VOLTAGE

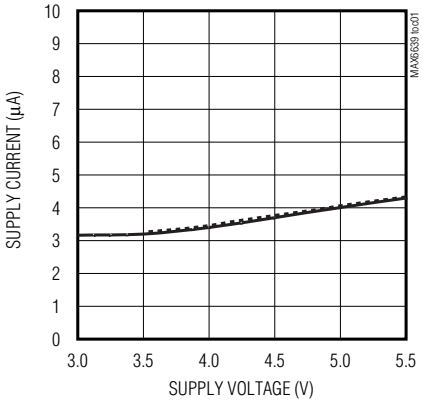

OPERATING SUPPLY CURRENT vs. SUPPLY VOLTAGE

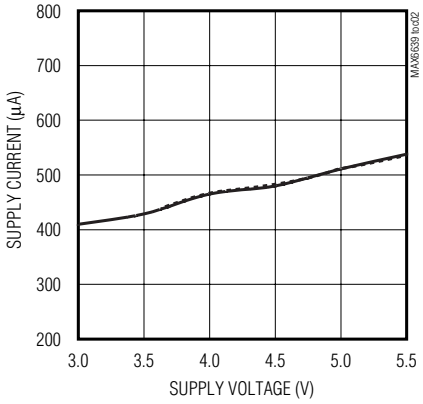

REMOTE TEMPERATURE ERROR vs. REMOTE-DIODE TEMPERATURE

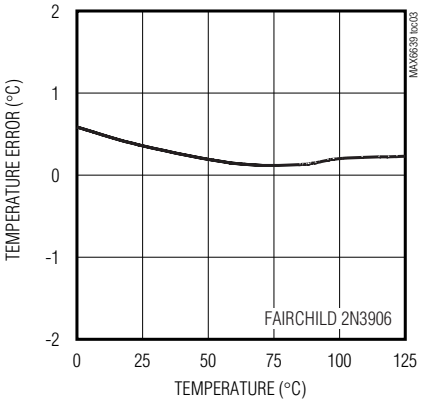

LOCAL TEMPERATURE ERROR vs. DIE TEMPERATURE

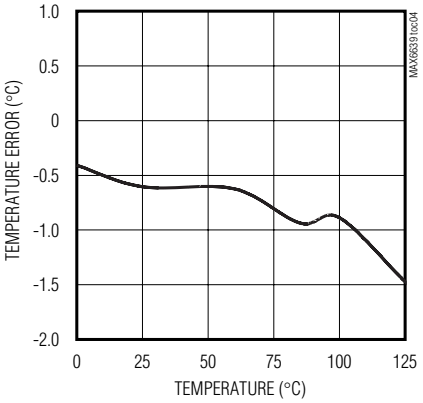

REMOTE TEMPERATURE ERROR vs. POWER-SUPPLY NOISE FREQUENCY

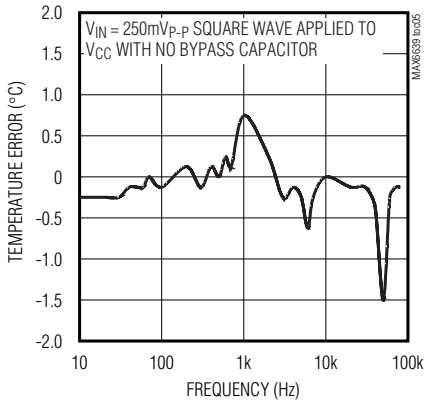

LOCAL TEMPERATURE ERROR vs. POWER-SUPPLY NOISE FREQUENCY

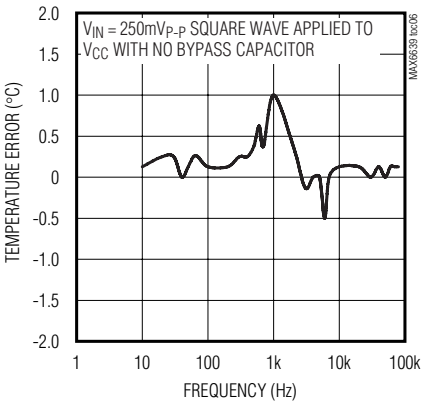

REMOTE TEMPERATURE ERROR vs. COMMON-MODE NOISE FREQUENCY

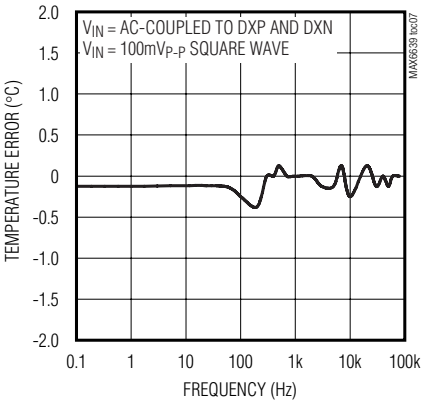

REMOTE TEMPERATURE ERROR vs. DIFFERENTIAL NOISE FREQUENCY

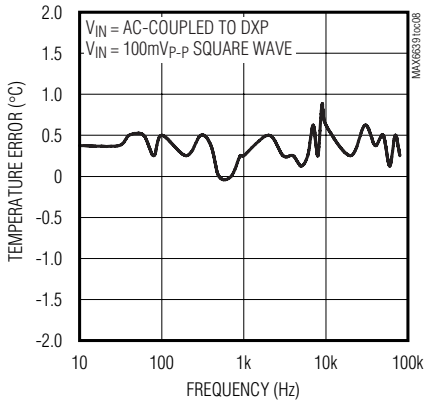

TEMPERATURE ERROR vs. DXP-DXN CAPACITANCE

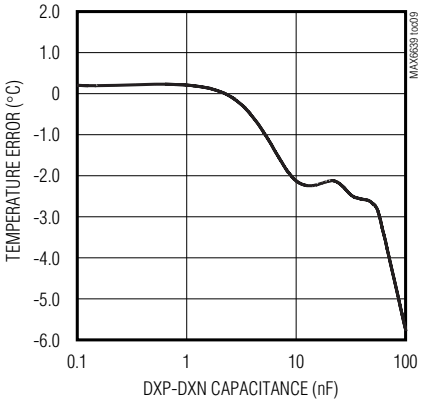

Downloaded from Arrow.com.

Typical Operating Characteristics (continued)

(V_{CC} = 3.3V, T_A = +25°C.)

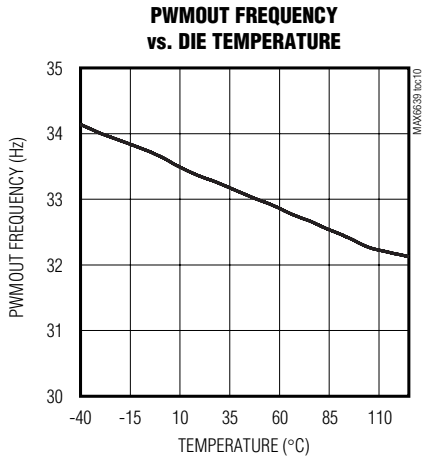

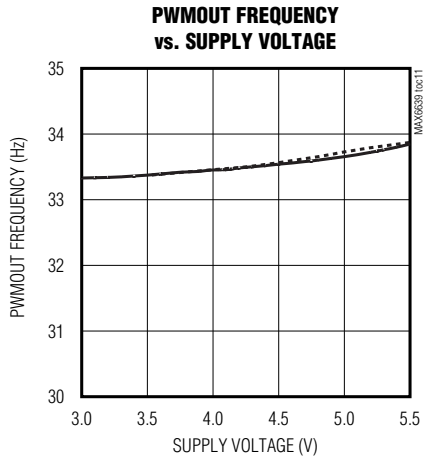

Pin Description

PIN		NAME	FUNCTION
TQFN-EP	QSOP		
1, 15	3, 1	PWM2, PWM1	Open-Drain Output to Power-Transistor Driving Fan. Connect to the gate of a MOSFET or base of a bipolar transistor. PWM_ requires a pullup resistor. The pullup resistor can be connected to a supply voltage as high as 13.5V, regardless of the MAX6639's supply voltage.
2, 16	4, 2	TACH2, TACH1	Tachometer Inputs. Connect to the tachometer output of the fan. TACH_ requires a pullup resistor. The pullup resistor can be connected to a supply voltage as high as 13.5V, regardless of the MAX6639's supply voltage.
3	5	$\overline{\text{FANFAIL}}$	Active-Low, Open-Drain, Fan-Failure Output. Open circuit when V_{CC} = 0.
4	6	$\overline{\text{THERM}}$	Active-Low, Open-Drain Thermal Alarm Output. Typically used for clock throttling. Open circuit when V_{CC} = 0.
5	7	$\overline{\text{OT}}$	Active-Low, Open-Drain Overtemperature Output. Typically used for system shutdown or clock throttling. Can be pulled up to 5.5V regardless of V_{CC}. Open circuit when V_{CC} = 0.
6	8	V_{CC}	Power-Supply Input. 3.3V nominal. Bypass V_{CC} to GND with a 0.1µF capacitor.
7	10	GND	Ground. Connect to a clean ground reference.
8, 10	9, 12	DXP1, DXP2	Combined Current Source and A/D Positive Input for Remote Diode. Connect to anode of remote-diode-connected temperature-sensing transistor. Do not leave unconnected; connect to DXN if no remote diode is used. Place a 2200pF capacitor between DXP_ and DXN for noise filtering.
9	11	DXN	Remote Diode Current Sink Input. Connect Cathode of the Remote-Diode-Connected Transistor to DXN
11	13	ADD	Address Input. Sets device slave address. Connect to GND, V_{CC}, or leave unconnected to give three unique addresses. See Table 1.
12	14	$\overline{\text{ALERT}}$	Active-Low, Open-Drain SMBus Alert Output
13	16	SCL	SMBus Serial-Clock Input. Can be pulled up to 5.5V regardless of V_{CC}. Open circuit when V_{CC} =
14	15	SDA	SMBus Serial-Data Input/Output, Open Drain. Can be pulled up to 5.5V regardless of V_{CC}. Open circuit when V_{CC} = 0.
—	—	EP	Exposed Pad (TQFN package only). Internally connected to GND. Connect EP to a large PCB pad for optimum performance and enhanced thermal dissipation. Not intended as an electrical connection point.

Downloaded from Arrow.com.

Block Diagram

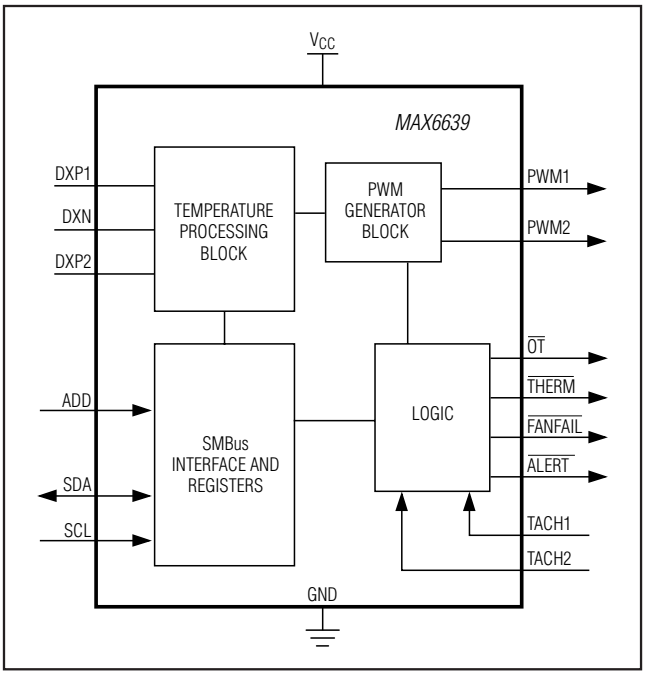

Detailed Description

The MAX6639 monitors its own temperature and a remote-diode-connected transistor or the temperatures of two external-diode-connected transistors, which typically reside on the die of a CPU or other integrated circuit. The 2-wire serial interface accepts standard SMBus write byte, read byte, send byte, and receive byte commands to read the temperature data and program the alarm thresholds. Temperature data can be read at any time over the SMBus, and a programmable alarm output can be used to generate interrupts, throttle signals, or overtemperature shutdown signals.

The temperature data is also used by the internal dual-PWM fan-speed controller to adjust the speed of up to two cooling fans, thereby minimizing noise when the system is running cool, but providing maximum cooling when power dissipation increases. RPM feedback allows the MAX6639 to control the fan's actual speed.

Write Byte Format

S	ADDRESS	WR	ACK	COMMAND	ACK	DATA	ACK	P
	7 bits			8 bits		8 bits		1

Slave Address: equivalent to chip-select line of a 3-wire interface

Command Byte: selects which register you are writing to

Data Byte: data goes into the register set by the command byte (to set thresholds, configuration masks, and sampling rate)

Read Byte Format

S	ADDRESS	WR	ACK	COMMAND	ACK	S	ADDRESS	RD	ACK	DATA	///	P
	7 bits			8 bits			7 bits			8 bits		

Slave Address: equivalent to chip-select line

Command Byte: selects which register you are reading from

Slave Address: repeated due to change in data-flow direction

Data Byte: reads from the register set by the command byte

Send Byte Format

S	ADDRESS	WR	ACK	COMMAND	ACK	P
	7 bits			8 bits		

Command Byte: sends command with no data, usually used for one-shot command

Receive Byte Format

S	ADDRESS	RD	ACK	DATA	///	P
	7 bits			8 bits		

Data Byte: reads data from the register commanded by the last read byte or write byte transmission; also used for SMBus alert response return address

S = START CONDITION
P = STOP CONDITION
SHADED = SLAVE TRANSMISSION
/// = NOT ACKNOWLEDGED

Figure 1. SMBus Protocols

Downloaded from Arrow.com.

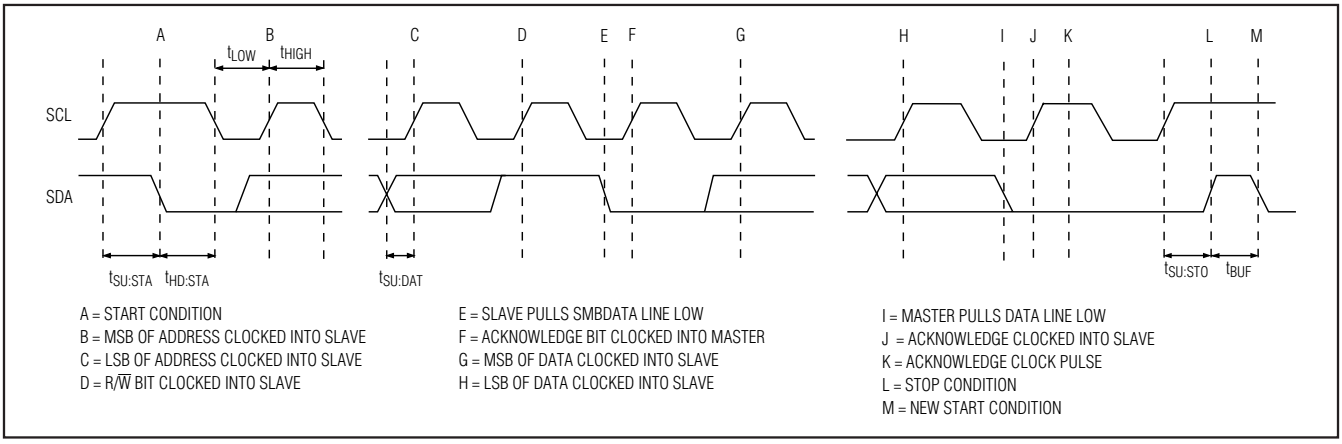

Figure 2. SMBus Write Timing Diagram

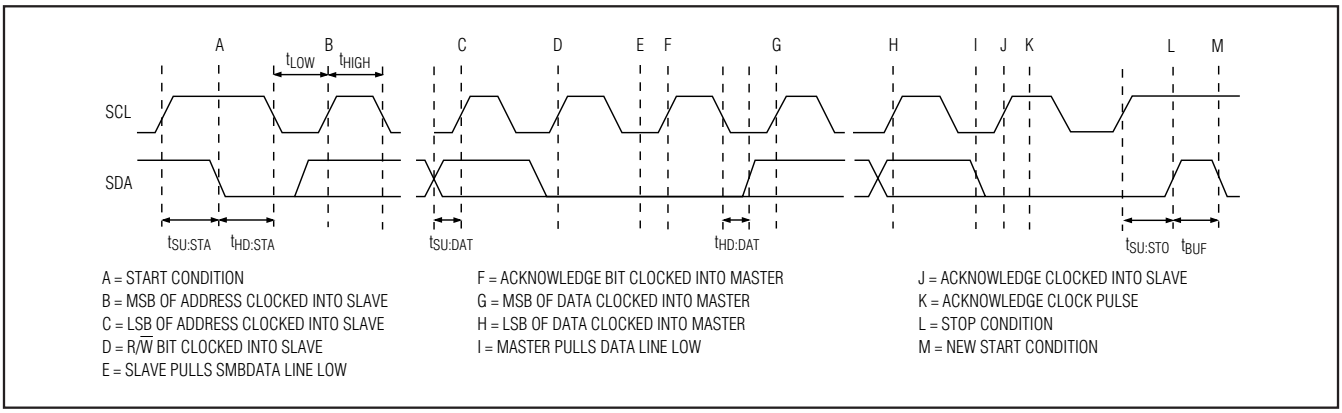

Figure 3. SMBus Read Timing Diagram

SMBus Digital Interface

From a software perspective, the MAX6639 appears as a set of byte-wide registers. This device uses a standard SMBus 2-wire/I²C-compatible serial interface to access the internal registers.

The MAX6639 features an address select input (ADD) that allows the MAX6639 to have three unique addresses (see Table 1).

The MAX6639 employs four standard SMBus protocols: write byte, read byte, send byte, and receive byte (Figures 1, 2, and 3). The shorter receive byte protocol allows quicker transfers, provided that the correct data register was previously selected by a read byte instruction. Use caution with the shorter protocols in multimaster systems, since a second master could overwrite the command byte without informing the first master.

Table 4 details the register addresses and functions, whether they can be read or written to, and the power-on reset (POR) state. See Tables 5–9 for all other register functions and the *Register Descriptions* section.

Table 1. I²C Slave Address

ADD INPUT STATE	I²C SLAVE ADDRESS	BINARY EQUIVALENT
V_{CC}	5Eh	0101 111
Floating	5Ch	0101 110
GND	58h	0101 100

Temperature Reading

Temperature data can be read from registers 00h and 01h. The temperature data format for these registers is 8 bits, with the LSB representing 1°C (Table 2) and the MSB representing +128°C. The MSB is transmitted first. Three additional temperature bits provide resolution down to 0.125°C and are in the channel 1 extended temperature (05h) and channel 2 extended temperature (06h) registers. All values below 0°C clip to 00h.

Downloaded from Arrow.com.

Table 2. Temperature Data Byte Format

TEMP (°C)	TEMP (°C)	DIGITAL OUTPUT
241	+241	1111 0001
240	+240	1111 0000
126	+126	0111 1110
25	+25	0001 1001
1.50	1	0000 0001
0.00	0	0000 0000

The MAX6639 employs a register lock mechanism to avoid getting temperature results from the temperature register and the extended temperature register sampled at two different time points. Reading the extended register stops the MAX6639 from updating the temperature register for at least 0.25s, unless there is a temperature register read before the scheduled update. This allows enough time to read the main register before it is updated, thereby preventing reading the temperature register data from one conversion and the extended temperature register data from a different conversion.

The MAX6639 measures the temperature at a fixed rate of 4Hz immediately after it is powered on. Setting bit 7 of the configuration register (04h) shuts down the temperature measurement cycle.

$\overline{OT}$ Output

When a measured temperature exceeds the corresponding $\overline{OT}$ temperature threshold and $\overline{OT}$ is not masked, the associated $\overline{OT}$ status register bit sets and the $\overline{OT}$ output asserts. If $\overline{OT}$ for the respective channel is masked, the $\overline{OT}$ status register sets, but the $\overline{OT}$ output does not assert. To deassert the $\overline{OT}$ output and the associated status register bit, either the measured temperature must fall at least 5°C below the trip threshold or the trip threshold must be increased to at least 5°C above the current measured temperature.

$\overline{THERM}$

When a measured temperature exceeds the corresponding $\overline{THERM}$ temperature threshold and $\overline{THERM}$ is not masked, the associated $\overline{THERM}$ status register bit is set and the $\overline{THERM}$ output asserts. If $\overline{THERM}$ for the respective channel is masked, the $\overline{THERM}$ status register is set, but the $\overline{THERM}$ output does not assert. To deassert the $\overline{THERM}$ output and the associated status register bit, either the measured temperature must fall at least 5°C below the trip threshold or the trip threshold must be increased to at least 5°C above the current measured temperature. Asserting $\overline{THERM}$ internally or externally forces both PWM outputs to 100% duty cycle when bit 6 in address 13h (fan 1) or bit 6 in address 17h (fan 2) is set.

$\overline{ALERT}$

The $\overline{ALERT}$ output asserts to indicate that a measured temperature exceeds the $\overline{ALERT}$ trip threshold for that temperature channel. The status bit and the $\overline{ALERT}$ output clear by reading the $\overline{ALERT}$ status register. If the $\overline{ALERT}$ status bit is cleared, but the temperature still exceeds the $\overline{ALERT}$ temperature threshold, $\overline{ALERT}$ reasserts on the next conversion, and the status bit sets again. A successful alert response protocol clears $\overline{ALERT}$ but does not affect the $\overline{ALERT}$ status bit.

TACH1 and TACH2 Inputs

To measure the fan speed, the MAX6639 has two tachometers. Each tachometer has an accurate internal clock to count the time elapsed in one revolution. Therefore, it is counting the time between two tachometer pulses for a fan with four poles. When the PWM signal is used to directly modulate the fan's power supply, the PWM frequency is normally in the 20Hz to 100Hz range. In this case, the time required for one revolution may be longer than the PWM on-time. For this reason, the PWM pulses are periodically stretched to allow tachometer measurement over a full revolution. Turn off pulse stretching by setting bit 5 of register 13h or register 17h when using a 4-wire fan.

The tachometer count is inversely proportional to the fan's RPM. The tachometer count data is stored in register 20h (for TACH1) and register 21h (for TACH2). Reading a value of 255 from the TACH count register means the fan's RPM is zero or too slow for the range. Reading a value of zero in the TACH count register means the fan's RPM is higher than the range selected. Table 2 shows the fan's available RPM ranges. Use registers 10h or 14h to select the appropriate RPM range for the fan being used.

$\overline{FANFAIL}$

The $\overline{FANFAIL}$ output asserts to indicate that one of the fans has failed or is spinning slower than the required speed. The MAX6639 detects fan fault depending on the fan-control mode. In PWM mode, the MAX6639 produces a square wave with a duty cycle set by the value

Table 3. Tachometer Setting

FAN RPM RANGE	INTERNAL CLOCK FREQUENCY (kHz)
2000	1
4000	2
8000	4
16,000	8

Downloaded from Arrow.com.

written to the duty-cycle registers (26h and 27h). In this mode, the MAX6639 signals a fan fault when the tachometer count is greater than the maximum tachometer count value stored in the appropriate register (22h and 23h). After the MAX6639 asserts $\overline{\text{FANFAIL}}$, the fan with a tachometer fault goes to full speed for 2s in an attempt to restart the fan and then returns to the original duty-cycle settings. Reading the status register clears the $\overline{\text{FANFAIL}}$ status bits and the output. The MAX6639 measures the fan speed again after 2s. The MAX6639 asserts $\overline{\text{FANFAIL}}$ if it detects the fan fault again.

In RPM mode (either automatic or manual), the MAX6639 checks for fan failure only when the duty cycle reaches 100%. It asserts $\overline{\text{FANFAIL}}$ when the tachometer count is greater than twice the target tachometer count. In manual RPM mode, registers 22h and 23h store the target tachometer count value. In automatic RPM mode, these registers store the maximum tachometer count.

Fan-Speed Control

The MAX6639 adjusts fan speed by controlling the duty cycle of a PWM signal. This PWM signal then either modulates the DC brushless fan's power supply or drives a speed-control input on a fan that is equipped with one. There are three speed-control modes: **PWM**, in which the PWM duty cycle is directly programmed over the SMBus; **manual RPM**, in which the desired tachometer count is programmed into a register and the MAX6639 adjusts its duty cycle to achieve the desired tachometer count; and **automatic RPM**, in which the tachometer count is adjusted based on a programmed temperature profile.

The MAX6639 divides each PWM cycle into 120 time slots. Registers 26h and 27h contain the current values of the duty cycles for PWM1 and PWM2, expressed as the effective time-slot length. For example, the PWM1 output duty cycle is 25% when register 26h reads 1Eh (30/120).

PWM Control Mode

Enter PWM mode by setting bit 7 of the fan 1 or 2 configuration 1 register (10h and 14h) to 1. In PWM control mode, the MAX6639 generates PWM signals whose duty cycles are specified by writing the desired values to fan duty-cycle registers 26h and 27h. When a new duty-cycle value is written into one of the fan duty-cycle registers, the duty cycle changes to the new value at a rate determined by the rate-of-change bits [6:4] in the fan 1 or 2 configuration 1 register. The rate-of-change of the duty cycle ranges from 000 (immediately changes to the new programmed value) to 111 (changes by 1/120 every 4s). See Table 5 and the *Fan 1 and 2 Configuration 1 (10h and 14h)* section.

Manual RPM Control Mode

Enter manual RPM control mode by setting bits 2, 3, and 7 of the fan 1 or 2 configuration 1 register (10h and 14h) to zero. In the manual RPM control mode, the MAX6639 adjusts the duty cycle and measures the fan speed. Enter the target tachometer count in register 22h for fan 1 and register 23h for fan 2. The MAX6639 compares the target tachometer count with the measured tachometer count and adjusts the duty cycle so that the fan speed gradually approaches the target tachometer count.

The first time manual RPM control mode is entered, the initial PWM duty cycle is determined by the target tachometer count:

$$\text{Initial duty cycle} = \frac{255 - \text{targetTACH}}{2}$$

where targetTACH is the value of the target tachometer count in the target tach count register (22h or 23h).

If the initial duty-cycle value is over 120, the duty cycle is 100%. If spin-up is enabled (bit 7 in registers 13h and 17h) and the fan is not already spinning, the duty cycle first goes to 100% and then goes to the initial duty-cycle value. Every 2s, the MAX6639 counts the fan's period by counting the number of pulses stored in registers 24h and 25h. If the count is different from the target count, the duty cycle is adjusted.

If a nonzero rate-of-change is selected, the duty cycle changes at the specified rate until the tachometer count is within ±5 of the target. Then the MAX6639 gets into a locked state and updates the duty cycle every 2s.

Automatic RPM Control Mode

In the automatic RPM control mode, the MAX6639 measures temperature, sets a target tachometer count based on the measured temperature, and then adjusts the duty cycle so the fan spins at the desired speed. Enter this mode by setting bit 7 of the fan 1 or 2 configuration 1 register (10h and 14h) to zero and selecting the temperature channel that controls the fan speed using bits 2 and 3 of the configuration register.

In both RPM modes (automatic and manual), the MAX6639 implements a low limit for the tachometer counts. This limits the maximum speed of the fan by ensuring that the fan's tachometer count does not go lower than the tachometer count specified by bits 5 through 0 of register 24h for fan 1 and register 25h for fan 2. Typical values for the minimum tachometer count

Downloaded from Arrow.com.

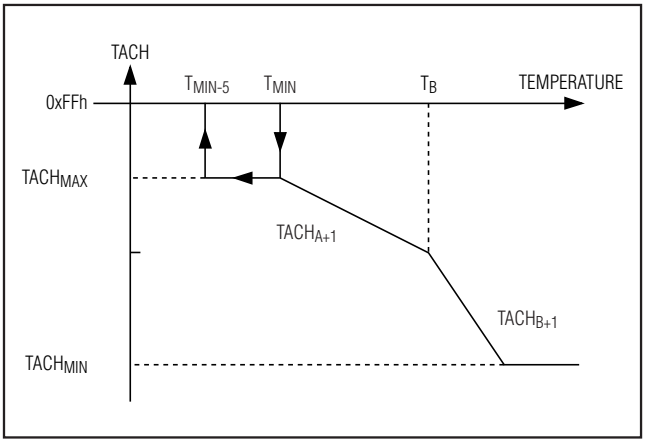

Figure 4. Tachometer Target Calculation

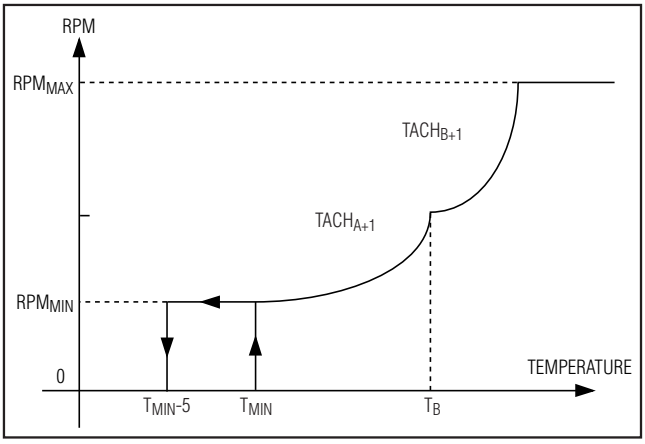

Figure 5. RPM Target Calculation

are 30h to 60h. Set the value to correspond to the full-rated RPM of the fan. See Figure 4.

Figure 5 shows how the MAX6639 calculates the target tachometer value based on the measured temperature. At T_{MIN}, the fan spins at a minimum speed value corresponding to the maximum tachometer count value stored in register 22h or 23h. Bit 0 of register 11h (fan 1) and register 15h (fan 2) selects the behavior below T_{MIN}. If bit 0 is equal to zero, the fan is completely off below T_{MIN}. When the temperature is falling, it must drop 5°C below T_{MIN} before the fan turns off. If bit 0 is set to 1, the fan does not turn off below T_{MIN}, but instead stays at the maximum tachometer count in register 22h or 23h.

When the measured temperature is higher than T_{MIN}, the MAX6639 calculates the target tachometer count value based on two linear equations. The target tachometer count decreases by the tach step size value stored in bits 7 through 4 of registers 11h and 15h each time the measured temperature increases by the temperature step size value stored in bits 2 and 3 of registers 11h and 15h. As the measured temperature continues to increase, a second tachometer step size goes into effect. Bits 3 through 0 of register 12h and 16h select the number temperature/PWM steps after which the new step size takes effect. The new step size is selected by bits 7 to 4 of registers 12h and 16h.

Register Descriptions

Channel 1 and Channel 2 Temperature Registers (00h and 01h)

These registers contain the results of temperature measurements. The MSB has a weight of +128°C and the LSB +1°C. Temperature data for remote diode 1 is in the channel 1 temperature register. Temperature data for remote diode 2 or the local sensor (selectable by bit 4 in the global configuration register) is in the channel 2 temperature register. Three additional temperature bits provide resolution down to 0.125°C and are in the channel 1 extended temperature (05h) and channel 2 extended temperature (06h) registers. The channel 1 and channel 2 temperature registers do not update until at least 250ms after the access of the associated extended temperature registers. All values below 0°C return 00h.

Status Register (02h)

A 1 indicates that an $\overline{ALERT}$, $\overline{THERM}$, $\overline{OT}$, or fan fault has occurred. Reading this register clears bits 7, 6, 1, and 0. Reading the register also clears the $\overline{ALERT}$ and $\overline{FANFAIL}$ outputs, but not the $\overline{THERM}$ and $\overline{OT}$ outputs. If the fault is still present on the next temperature measurement cycle, any cleared bits and outputs are set again. A successful alert response clears the values on the outputs but does not clear the status register bits. The $\overline{ALERT}$ bits assert when the measured temperature is higher than the respective thresholds. The $\overline{THERM}$ and $\overline{OT}$ outputs behave like comparators with 5°C hysteresis.

Downloaded from Arrow.com.

Table 4. Register Map

READ/ WRITE	REGISTER NO. ADDRESS	POR STATE	FUNCTION	D7	D6	D5	D4	D3	D2	D1	D0
R	00h	0000 0000	Temperature channel 1	MSB (+128°C)	—	—	—	—	—	—	LSB (1°C)
R	01h	0000 0000	Temperature channel 2	MSB (+128°C)	—	—	—	—	—	—	LSB (1°C)
R	02h	0000 0000	Status byte	Channel 1 $\overline{\text{ALERT}}$	Channel 2 $\overline{\text{ALERT}}$	Channel 1 $\overline{\text{OT}}$	Channel 2 $\overline{\text{OT}}$	Channel 1 $\overline{\text{THERM}}$	Channel 2 $\overline{\text{THERM}}$	Fan 1 fault	Fan 2 fault
R/W	03h	0000 0011	Output mask	Channel 1 $\overline{\text{ALERT}}$	Channel 2 $\overline{\text{ALERT}}$	Channel 1 $\overline{\text{OT}}$	Channel 2 $\overline{\text{OT}}$	Channel 1 $\overline{\text{THERM}}$	Channel 2 $\overline{\text{THERM}}$	Fan 1 fault	Fan 2 fault
R/W	04h	0011 0000	Global configuration	$\overline{\text{Run}}$ 0 = run, 1= stby	POR: 1 = reset	SMBus timeout: 0 = enabled, 1 = disabled	Temp channel 2 source: 1 = local, 0 = remote 2	PWM output frequency range	Reserved	Reserved	Reserved
R	05h	0000 0000	Channel 1 extended temperature	MSB (0.5°C)	—	LSB (0.125°C)	Reserved	Reserved	Reserved	Reserved	Diode fault
R	06h	0000 0000	Channel 2 extended temperature	MSB (0.5°C)	—	LSB (0.125°C)	Reserved	Reserved	Reserved	Reserved	Diode fault
R/W	08h	0101 0101	Channel 1 $\overline{\text{ALERT}}$ limit	MSB	—	—	—	—	—	—	LSB (1°C)
R/W	09h	0101 0101	Channel 2 $\overline{\text{ALERT}}$ limit	MSB	—	—	—	—	—	—	LSB (1°C)
R/W	0Ah	0110 1110	Channel 1 $\overline{\text{OT}}$ limit	MSB	—	—	—	—	—	—	LSB (1°C)
R/W	0Bh	0110 1110	Channel 2 $\overline{\text{OT}}$ limit	MSB	—	—	—	—	—	—	LSB (1°C)
R/W	0Ch	0101 0101	Channel 1 $\overline{\text{THERM}}$ limit	MSB	—	—	—	—	—	—	LSB (1°C)
R/W	0Dh	0101 0101	Channel 2 $\overline{\text{THERM}}$ limit	MSB	—	—	—	—	—	—	LSB (1°C)
R/W	10h	1000 0010	Fan 1 configuration 1	PWM mode	Rate of change (MSB)	Rate of change	Rate of change (LSB)	Fan 1 channel 1 control	Fan 1 channel 2 control	RPM range select	RPM range select
R/W	11h	0000 0000	Fan 1 Configuration 2a	RPM step-size A (MSB)	RPM step-size A	RPM step-size A	RPM step-size A (LSB)	Temp step-size A (MSB)	Temp step-size A (LSB)	PWM Polarity	Minimum fan speed: 0 = 0%, 1= value

Downloaded from Arrow.com.

Table 4. Register Map (continued)

READ/ WRITE	REGISTER NO. ADDRESS	POR STATE	FUNCTION	D7	D6	D5	D4	D3	D2	D1	D0
R/W	12h	0000 0000	Fan 1 configuration 2b	RPM step-size B (MSB)	RPM step-size B	RPM step-size B	RPM step-size B (LSB)	Start step-size B (MSB)	Start step-size B	Start step-size B	Start step-size B (LSB)
R/W	13h	0100 0001	Fan 1 configuration 3	Spin-up disable	$\overline{\text{THERM}}$ to full-speed enable	Pulse stretching disable	Reserved	Reserved	Reserved	Fan PWM frequency (MSB)	Fan PWM frequency (LSB)
R/W	14h	1000 0010	Fan 2 configuration 1	PWM mode	Step-size delay (MSB)	Step-size delay	Step-size delay (LSB)	Fan 2 channel 1 control	Fan 2 channel 2 control	RPM range select	RPM range select
R/W	15h	0000 0000	Fan 2 configuration 2a	RPM step-size A (MSB)	RPM step-size A	RPM step-size A	RPM step-size A (LSB)	Temp step-size A (MSB)	Temp step-size A (LSB)	PWM 100% duty cycle	Minimum fan speed: 0 = 0%, 1= value in 22h
R/W	16h	0000 0000	Fan 2 configuration 2b	RPM step-size B (MSB)	RPM step-size B	RPM step-size B	RPM step-size B (LSB)	Start step-size B (MSB)	Start step-size B	Start step-size B	Start step-size B (LSB)
R/W	17h	0100 0001	Fan 2 configuration 3	Spin-up disable	$\overline{\text{THERM}}$ to full-speed enable	Pulse stretching disable	Reserved	Reserved	Reserved	Fan PWM frequency (MSB)	Fan PWM frequency (LSB)
R	20h	1111 1111	Fan 1 tachometer count	MSB	—	—	—	—	—	—	LSB
R	21h	1111 1111	Fan 2 tachometer count	MSB	—	—	—	—	—	—	LSB
R/W	22h	1111 1111	Fan 1 start tach count/ target tach count	MSB	—	—	—	—	—	—	LSB
R/W	23h	1111 1111	Fan 2 max tach count/ target tach count	MSB	—	—	—	—	—	—	LSB
R/W	24h	0100 0000	Pulses per revolution/ fan 1 minimum tach count	Pulse per revolution (MSB)	Pulse per revolution (LSB)	Fan 1 min tach count (MSB)	Fan 1 min tach count	Fan 1 min tach count	Fan 1 min tach count	Fan 1 min tach count	Fan 1 min tach count (LSB)
R/W	25h	0100 0000	Pulses per revolution/ fan 2 minimum tach count	Pulse per revolution (MSB)	Pulse per revolution (LSB)	Fan 2 min tach count (MSB)	Fan 2 min tach count	Fan 2 min tach count	Fan 2 min tach count	Fan 2 min tach count	Fan 2 min tach count (LSB)
R	26h	0000 0000	Fan 1 current duty cycle	MSB	—	—	—	—	—	—	LSB

Downloaded from Arrow.com.

Table 4. Register Map (continued)

READ/ WRITE	REGISTER NO. ADDRESS	POR STATE	FUNCTION	D7	D6	D5	D4	D3	D2	D1	D0
W	26h	0011 1100	Fan 1 target duty cycle	MSB	—	—	—	—	—	—	LSB
R	27h	0000 0000	Fan 2 current duty cycle	MSB	—	—	—	—	—	—	LSB
W	27h	0011 1100	Fan 2 target duty cycle	MSB	—	—	—	—	—	—	LSB
R/W	28h	0100 000	Channel 1 minimum fan-start temperature	MSB	—	—	—	—	—	—	LSB
R/W	29h	0100 0000	Channel 2 minimum fan-start temperature	MSB	—	—	—	—	—	—	LSB
R	3Dh	0101 1000	Read device ID	0	1	0	1	1	0	0	0
R	3Eh	0100 1101	Read manufacturer ID	0	1	0	0	1	1	0	1
R	3Fh	0000 0000	Read device revision	0	0	0	0	0	0	0	0

Mask Register (03h)

This register masks the $\overline{\text{ALERT}}$, $\overline{\text{OT}}$, $\overline{\text{THERM}}$, and $\overline{\text{FANFAIL}}$ outputs. A 1 prevents the corresponding failures from being asserted on these outputs. The mask bits do not affect the status register.

Global Configuration Register (04h)

The global configuration register controls the shutdown mode, power-on reset, SMBus timeout, and temperature channel 2 source select:

- **D7: Run/Standby.** Normal operation is $\overline{\text{run}}$ (0). Setting this bit to 1 suspends conversions and puts the MAX6639 into low-power sleep mode.
- **D6: Software POR.** Writing a 1 resets all registers to their default values.
- **D5: SMBus Timeout Disable.** Writing a zero enables SMBus timeout for prevention of bus lockup. When the timeout function is enabled, the SMBus interface is reset if SDA or SCL remains low for more than 74ms (typ).
- **D4: Temperature Channel 2 Source.** Selects either local or remote 2 as the source for temperature channel 2 register data. Writing a zero to this bit selects remote 2 for temperature channel 2.
- **D3: PWM Output Frequency Range.** Selects either the 20Hz to 100Hz range or the 5kHz to 25kHz range for the PWM outputs (see Table 9).

Extended Temperature Registers (05h and 06h)

These registers contain the extended temperature data from channels 1 and 2. Bits D[7:5] contain the 3 LSBs of the temperature data. The bit values are 0.5°C, 0.25°C, and 0.125°C. When bit 0 is set to 1, a diode fault has been detected.

Channel 1 and Channel 2 $\overline{\text{ALERT}}$, $\overline{\text{OT}}$, and $\overline{\text{THERM}}$ Limits (08h Through 0Dh)

These registers contain the temperatures above which the $\overline{\text{ALERT}}$, $\overline{\text{THERM}}$, and $\overline{\text{OT}}$ status bits set and outputs assert (for the temperature channels that are not masked). The data format is the same as that of the channel 1 and channel 2 temperature registers: the LSB weight is +1°C and the MSB is +128°C.

Downloaded from Arrow.com.

Table 5. Fan Duty-Cycle Rate-of-Change

REGISTER 10h OR 14h D[6:4]	NOMINAL RATE OF CHANGE (s)	ACTUAL RATE OF CHANGE AT SPECIFIC PWM FREQUENCIES				NOMINAL TIME FROM 33% TO 100% (s)
		100Hz (s)	50Hz (s)	33.3Hz (s)	20Hz (s)	
000	**0**	**0**	**0**	**0**	**0**	**0**
001	0.0625	0.06	0.06	0.06	0.05	5
010	0.125	0.13	0.12	0.12	0.15	10
011	0.25	0.25	0.26	0.24	0.25	20
100	0.5	0.5	0.5	0.51	0.5	40
101	1	1	1	0.99	1	80
110	2	2	2	1.98	2	160
111	4	4	4	3.96	4	320

Fan 1 and 2 Configuration 1 (10h and 14h)

The following registers control the modes of operation of the MAX6639:

- **D7: PWM Mode.** D7 = 1 sets the fan into manual PWM duty-cycle control mode. Write the target duty cycle in the fan duty-cycle register. D7 = 0 puts the fan into RPM control mode. To set RPM manually, set both fan-control temperature channels (bits D2 and D3) to zero and write the desired tachometer count into the TACH count register.
- **D[6:4]: Fan Duty-Cycle Rate-of-Change.** D[6:4] sets the time between increments of the duty cycle. Each increment is 1/120 of the duty cycle. By adjusting the rate-of-change, audibility of fan-speed changes can be traded for response time. Table 5 shows the effect of D[6:4] and, for reference, the time required for the fan speed to change from 33% to 100% duty cycle as a function of the rate-of-change bits.
- **D[3:2]: Temperature Channel(s) for Fan Control.** Selects the temperature channel(s) that control the PWM output when the MAX6639 is in automatic RPM control mode (PWM mode bit is zero). If two channels are selected, the fan goes to the higher of the two possible speeds. If neither channel is selected, then the fan is in manual RPM mode and the speed is forced to the value written to the target tach count register 22h or 23h.
- **D[1:0]: RPM Range.** Scales the tachometer counter by setting the maximum (full-scale) value of the RPM range to 2000, 4000, 8000, or 16,000. (Table 3 shows the internal clock frequency as a function of the range.)

Table 6. Fan RPM Speed

REGISTER 10h OR 14h	FAN MAXIMUM RPM VALUE
00	2000
01	4000
10	8000
11	16,000

Table 7. RPM-to-Tachometer Count Relationship Examples

MAXIMUM RPM VALUE	ACTUAL RPM	SELECTED NUMBER OF PULSES PER REVOLUTION	ACTUAL FAN PULSES PER REVOLUTION	TACHOMETER COUNT VALUE*
2000	1000	2	2	3Ch
4000	1000	2	2	78h
4000	3000	2	2	28h
4000	3000	2	4	14h
16,000	8000	4	4	3Ch
16,000	8000	4	2	78h

**Tachometer count value = ((internal clock frequency) x 60) / actual RPM) (selected number of pulses per revolution / actual fan pulses)*

Downloaded from Arrow.com.

Table 8. Temperature Step Size

REGISTER 11h OR 15h	FAN CONTROL TEMPERATURE STEP SIZE (°C)
00	1
01	2
10	4
11	8

Fan 1 and 2 Configuration 2a (11h and 15h)

The following registers apply to the automatic RPM control mode:

- **D[7:4]: Fan RPM (Tachometer) Step-Size A.** Selects the number of tachometer counts the target value decreases for each temperature step increase above the fan-start temperature. Value = n + 1 (1 through 16) where n is the value of D[7:4].
- **D[3:2]: Temperature Step Size.** Selects the temperature increment for fan control. For each temperature step increase, the target tachometer count decreases by the value selected by D[7:4] (Table 8).
- **D1: PWM Output Polarity.** PWM output is low at 100% duty cycle when this bit is set to zero. PWM output is high at 100% duty cycle when this bit is set to 1.
- **D0: Minimum Speed.** Selects the value of the minimum fan speed (when temperature is below the fan-start temperature in the automatic RPM control mode). Set to zero for 0% fan drive. Set to 1 to determine the minimum fan speed by the tachometer count value in registers 22h and 23h (fan maximum TACH).

Fan 1 and 2 Configuration 2b (12h and 16h)

The following registers select the tachometer step sizes and number of steps for step-size A to step-size B slope changes (see Figure 1):

- **D[7:4]: RPM (Tachometer) Step Size B.** Selects number of tachometer counts the target value decreases for each temperature step increase after the number of steps selected by D[3:0]. Value = n + 1 (1 through 16) where n is the value of D[7:4].
- **D[3:0]:** Selects the number of temperature/tachometer steps above the fan-start temperature at which step-size B begins.

Fan 1 and Fan 2 Configuration 3 (13h and 17h)

The following registers control fan spin-up, PWM output frequency, pulse stretching, and $\overline{\text{THERM}}$ to fan full-speed enable:

Table 9. Fan PWM Frequency

REGISTERS 13h AND 16h	LOW-FREQUENCY (Hz) REGISTER 04h D3 = 0	HIGH-FREQUENCY (kHz) REGISTER 04h D3 = 1
00	20	5
01	33.33	8.33
10	50	12.5
11	100	25

- **D7: Fan Spin-Up Disable.** Set to zero to enable fan spin-up. Whenever the fan starts up from zero drive, it is driven with 100% duty cycle for 2s to ensure that it starts. Set to 1 to disable the spin-up function.
- **D6: $\overline{\text{THERM}}$ to Full-Speed Enable.** When this bit is 1, $\overline{\text{THERM}}$ going low (either by being pulled low externally or by the measured temperature exceeding the THERM limit) forces the fan to full speed. In all modes, this happens at the rate determined by the rate-of-change selection. When $\overline{\text{THERM}}$ is deasserted (even if the fan has not reached full speed), the speed falls at the selected rate-of-change to the target speed.
- **D5: Disable Pulse Stretching.** Pulse stretching is enabled when this bit is set to zero. When modulating the fan's power supply with the PWM signal, the PWM pulses are periodically stretched to keep the tachometer signal available for one full revolution. Setting this bit to 1 disables pulse stretching. The MAX6639 still measures the fan speed but does not stretch the pulses for measurements, so the fan's power supply must not be pulse modulated.
- **D[1:0]: PWM Output Frequency.** These bits control the PWM output frequency as shown in Table 9.

Fan Tach Count 1 and 2 (20h and 21h)

These registers have the latest tachometer measurement of the corresponding channel. This is inversely proportional to the fan's speed. The fan RPM range should be set so this count falls in the 30 to 160 range for normal fan operation.

Fan Start Tach Count/Target Tach Count (22h and 23h)

D[7:0]: This sets the starting tachometer count for the fan in automatic RPM mode. Depending on the setting of the minimum duty-cycle bit, the tachometer count has this value either at all temperatures below the fan-start temperature or the count is zero below the fan-start temperature and has this value when the fan-start temperature is reached. These registers are the target tach count when in manual RPM mode.

Downloaded from Arrow.com.

Table 10. Tachometer Pulses per Revolution

REGISTERS 24h OR 25h D[7:6]	TACHOMETER PULSES PER REVOLUTION
00	1
01	2
10	3
11	4

Fan 1 and 2 Pulses and Min RPM (24h and 25h)

D[7:6]: This sets the number of tachometer pulses per revolution for the fan. When set properly, a 2000RPM fan with two pulses per revolution has the same tachometer count as a 2000RPM fan with four pulses per revolution. Table 10 lists tachometer pulses per revolution.

D[5:0]: This sets the minimum allowable fan tachometer count (maximum speed). This limits the maximum speed of the fan to reduce noise at high temperatures. For reasonable speed resolution, the fan RPM range should be set so this value is between approximately 30 and 60. If a maximum RPM limit is unnecessary, this value can be set to the full-speed tachometer count.

Fan 1 and 2 Duty Cycle (26h and 27h)

These registers contain the present value of the PWM duty cycle. In PWM fan-control mode, the desired (target) value of the PWM duty cycle can be written directly into this register.

Channel 1 and Channel 2 Fan-Start Temperature (28h and 29h)

These registers contain the temperatures at which fan control begins (in automatic RPM mode).

Applications Information

Fan-Drive Circuits

A variety of fan-drive circuit configurations can be used with the MAX6639 to control the fan's speed. Four of the most common are shown in Figures 6 through 10.

PWM Power-Supply Drive (High Side or Low Side)

The simplest way to control the speed of a 3-wire (supply, ground, and tachometer output) fan is to modulate its power supply with a PWM signal. The PWM frequency is typically in the 20Hz to 40Hz range, with 33Hz being a common value. If the frequency is too high, the fan's internal control circuitry does not have sufficient time to turn on during a power-supply pulse. If the frequency is too low, the power-supply modulation becomes more easily audible.

The PWM can take place on the high side (Figure 6) or the low side (Figure 7) of the fan's power supply. In either case, if the tachometer is used, it is usually necessary to periodically stretch a PWM pulse so there is enough time to count the tachometer pulse edges for speed measurement. The MAX6639 allows this pulse stretching to be enabled or disabled to match the needs of the application.

Pulse stretching can sometimes be audible if the fan responds quickly to changes in the drive voltage. If the acoustic effects of pulse stretching are too noticeable,

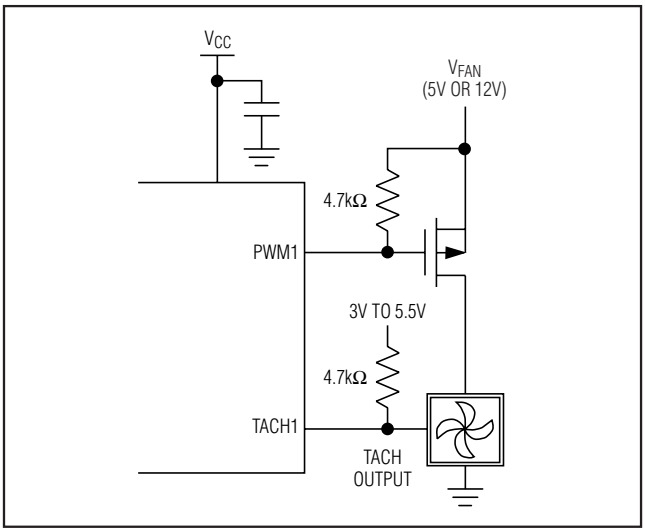

Figure 6. High-Side PWM Drive Circuit

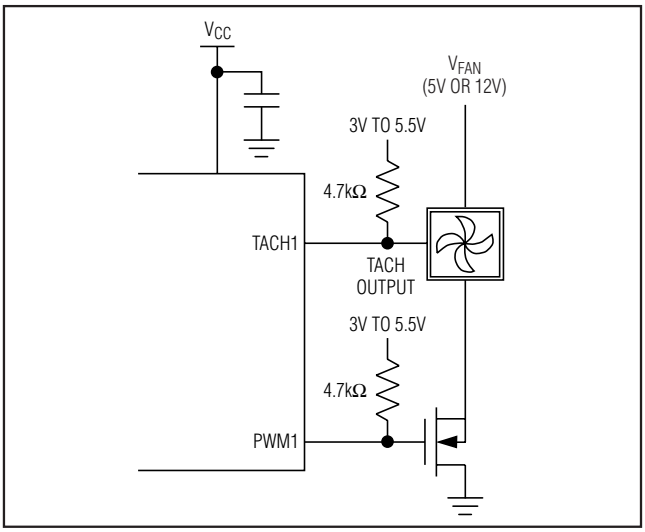

Figure 7. Low-Side Drive Circuit

Downloaded from Arrow.com.

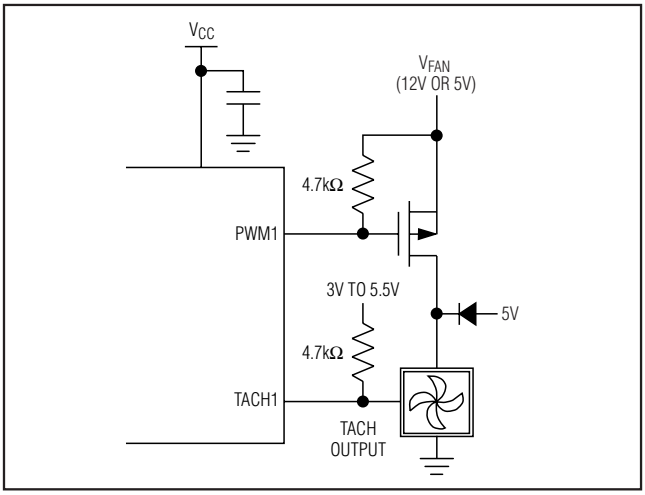

Figure 8. High-Side PWM Drive with "Keep-Alive" Supply

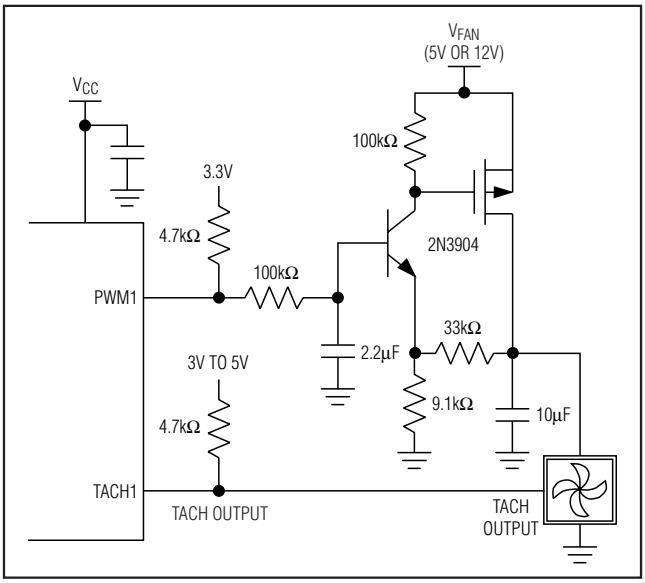

Figure 9. High-Side Linear Drive Circuit

the circuit in Figure 8 can be used to eliminate pulse stretching while still allowing accurate tachometer feedback. The diode connects the fan to a low-voltage power supply, which keeps the fan's internal circuitry powered even when the PWM drive is zero. Therefore, the tachometer signal is always available and pulse stretching can be turned off. Note that this approach prevents the fan from turning completely off, so even when the duty cycle is 0%, the fan may still spin.

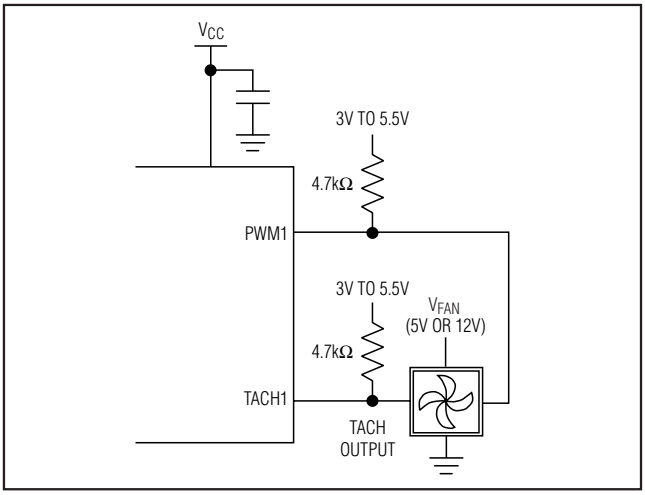

Figure 10. 4-Wire Fan with PWM Speed-Control Input

Linear Fan Supply Drive

While many fans are compatible with PWM power-supply drive, some are excessively noisy with this approach. When this is the case, a good alternative is to control the fan's power-supply voltage with a variable DC power-supply circuit. The circuit in Figure 10 accepts the PWM signal as an input, filters the PWM, and converts it to a DC voltage that then drives the fan. To minimize the size of the filter capacitor, use the highest available PWM frequency. Pulse stretching is not necessary when using a linear fan supply. Note that this approach is not as efficient as PWM drive, as the fan's power-supply current flows through the MOSFET, which can have an appreciable voltage across it. The total power is still less than that of a fan running at full speed. Table 11 is a summary of fan-drive options.

4-Wire Fans

Some fans have an additional, fourth terminal that accepts a logic-level PWM speed-control signal as shown in Figure 10. These fans require no external power circuitry and combine the low noise of linear drive with the high efficiency of PWM power-supply drive. Higher PWM frequencies are recommended when using 4-wire fans.

Downloaded from Arrow.com.

Table 11. Summary of Fan-Drive Options

FIGURE	DESCRIPTION	PULSE STRETCHING	PWM FREQUENCY	PWM POLARITY
6	High-side PWM drive	Yes	Low	Negative
7	Low-side PWM drive	Yes	Low	Positive
8	High-side PWM drive with keep-alive supply	No	Low	Negative
9	High-side linear supply	No	High	Positive
10	4-wire fan with PWM speed-control input	No	High	Positive

Quick-Start Guide for 8000RPM 4-Pole (2 Pulses per Revolution) Fan in Automatic RPM Mode Using the Circuit of Figure 7

1) Write 02h to register 11h to set the PWM output to drive the n-channel MOSFET.
2) Write 4Bh to register 22h to set the minimum RPM to 3200.
3) Write 5Eh to register 24h to set the pulses per revolution to 2 and to set the maximum RPM speed to 8000RPM.
4) Write 19h to register 28h to set the fan-start temperature to +25°C.
5) Write D2h to register 10h to start automatic RPM mode.

Remote-Diode Considerations

Temperature accuracy depends upon having a good-quality, diode-connected, small-signal transistor. Accuracy has been experimentally verified for all the devices listed in Table 12. The MAX6639 can also directly measure the die temperature of CPUs and other ICs with on-board temperature-sensing diodes.

The transistor must be a small-signal type with a relatively high forward voltage. This ensures that the input voltage is within the A/D input voltage range. The forward voltage must be greater than 0.25V at 10µA at the highest expected temperature. The forward voltage must be less than 0.95V at 100µA at the lowest expected temperature. The base resistance has to be less than 100Ω. Tight specification of forward-current gain (+50 to +150, for example) indicates that the manufacturer has good process control and that the devices have consistent characteristics.

Effect of Ideality Factor

The accuracy of the remote temperature measurements depends on the ideality factor (n) of the remote diode (actually a transistor). The MAX6639 is optimized for n = 1.008, for Intel® Pentium® II and AMD Athlon® MP compatibility, and the MAX6639F is optimized for n = 1.021 for Penryn compatibiliy. If a sense transistor with a different ideality factor is used, the output data is different. Fortunately, the difference is predictable.

Assume a remote-diode sensor designed for a nominal ideality factor $n_{NOMINAL}$ is used to measure the temperature of a diode with a different ideality factor, n_1. The measured temperature T_M can be corrected using:

$$T_M = T_{ACTUAL}\left(\frac{n_1}{n_{NOMINAL}}\right)$$

where temperature is measured in Kelvin.

As mentioned above, the nominal ideality factor of the MAX6639 is 1.008. As an example, assume the MAX6639 is configured with a CPU that has an ideality factor of 1.002. If the diode has no series resistance, the measured data is related to the real temperature as follows:

$$T_{ACTUAL} = T_M\left(\frac{n_{NOMINAL}}{n_1}\right) = T_M\left(\frac{1.008}{1.002}\right) = T_M(1.00599)$$

For a real temperature of +85°C (358.15K), the measured temperature is +82.91°C (356.02K), which is an error of -2.13°C.

Table 12. Remote-Sensor Transistor Manufacturers

MANUFACTURER	MODEL NO.
Central Semiconductor (USA)	CMPT3906
Rohm Semiconductor (USA)	SST3906
Samsung (Korea)	KST3906-TF
Siemens (Germany)	SMBT3906

Intel and Pentium are registered trademarks of Intel Corp.
AMD Athlon is a registered trademark of Advanced Micro Devices, Inc.

Downloaded from Arrow.com.

Effect of Series Resistance

Series resistance in a sense diode contributes additional errors. For nominal diode currents of 10µA and 100µA, change in the measured voltage is:

$$\Delta V_M = R_S\,(100\mu A - 10\mu A) = 90\mu A \times R_S$$

Since 1°C corresponds to 198.6µV, series resistance contributes a temperature offset of:

$$\frac{90\,\frac{\mu V}{\Omega}}{198.6\,\frac{\mu V}{°C}} = 0.453\,\frac{°C}{\Omega}$$

Assume that the diode being measured has a series resistance of 3Ω. The series resistance contributes an offset of:

$$3\Omega \times 0.453\,\frac{°C}{\Omega} = 1.36°C$$

The effects of the ideality factor and series resistance are additive. If the diode has an ideality factor of 1.002 and series resistance of 3Ω, the total offset can be calculated by adding error due to series resistance with error due to ideality factor:

$$1.36°C - 2.13°C = -0.77°C$$

for a diode temperature of +85°C.

In this example, the effect of the series resistance and the ideality factor partially cancel each other.

For best accuracy, the discrete transistor should be a small-signal device with its collector connected to GND and base connected to DXN. Table 12 lists examples of discrete transistors that are appropriate for use with the MAX6639.

The transistor must be a small-signal type with a relatively high forward voltage; otherwise, the ADC input voltage range can be violated. The forward voltage at the highest expected temperature must be greater than 0.25V at 10µA, and at the lowest expected temperature, the forward voltage must be less than 0.95V at 100µA. Large-power transistors must not be used. Also, ensure that the base resistance is less than 100Ω. Tight specifications for forward current gain (50 < fl < 150, for example) indicate that the manufacturer has good process controls and that the devices have consistent V_{BE} characteristics.

ADC Noise Filtering

The integrating ADC has inherently good noise rejection, especially of low-frequency signals such as 60Hz/120Hz power-supply hum. Micropower operation places constraints on high-frequency noise rejection. Lay out the PCB carefully with proper external noise filtering for high-accuracy remote measurements in electrically noisy environments.

Filter high-frequency electromagnetic interference (EMI) at DXP and DXN with an external 2200pF capacitor connected between the two inputs. This capacitor can be increased to approximately 3300pF (max), including cable capacitance. A capacitance higher than 3300pF introduces errors due to the rise time of the switched-current source.

Twisted Pairs and Shielded Cables

For remote-sensor distances longer than 8in, or in particularly noisy environments, a twisted pair is recommended. Its practical length is 6ft to 12ft (typ) before noise becomes a problem, as tested in a noisy electronics laboratory. For longer distances, the best solution is a shielded twisted pair like that used for audio microphones. For example, Belden #8451 works well for distances up to 100ft in a noisy environment. Connect the twisted pair to DXP and DXN and the shield to ground, and leave the shield's remote end unterminated. Excess capacitance at DXN or DXP limits practical remote-sensor distances (see the *Typical Operating Characteristics*).

For very long cable runs, the cable's parasitic capacitance often provides noise filtering, so the recommended 2200pF capacitor can often be removed or reduced in value. Cable resistance also affects remote-sensor accuracy. A 1Ω series resistance introduces about +1/2°C error.

PCB Layout Checklist

1) Place the MAX6639 as close as practical to the remote diode. In a noisy environment, such as a computer motherboard, this distance can be 4in to 8in, or more, as long as the worst noise sources (such as CRTs, clock generators, memory buses, and ISA/PCI buses) are avoided.
2) Do not route the DXP/DXN lines next to the deflection coils of a CRT. Also, do not route the traces across a fast memory bus, which can easily introduce +30°C error, even with good filtering. Otherwise, most noise sources are fairly benign.

Downloaded from Arrow.com.

Typical Operating Circuit

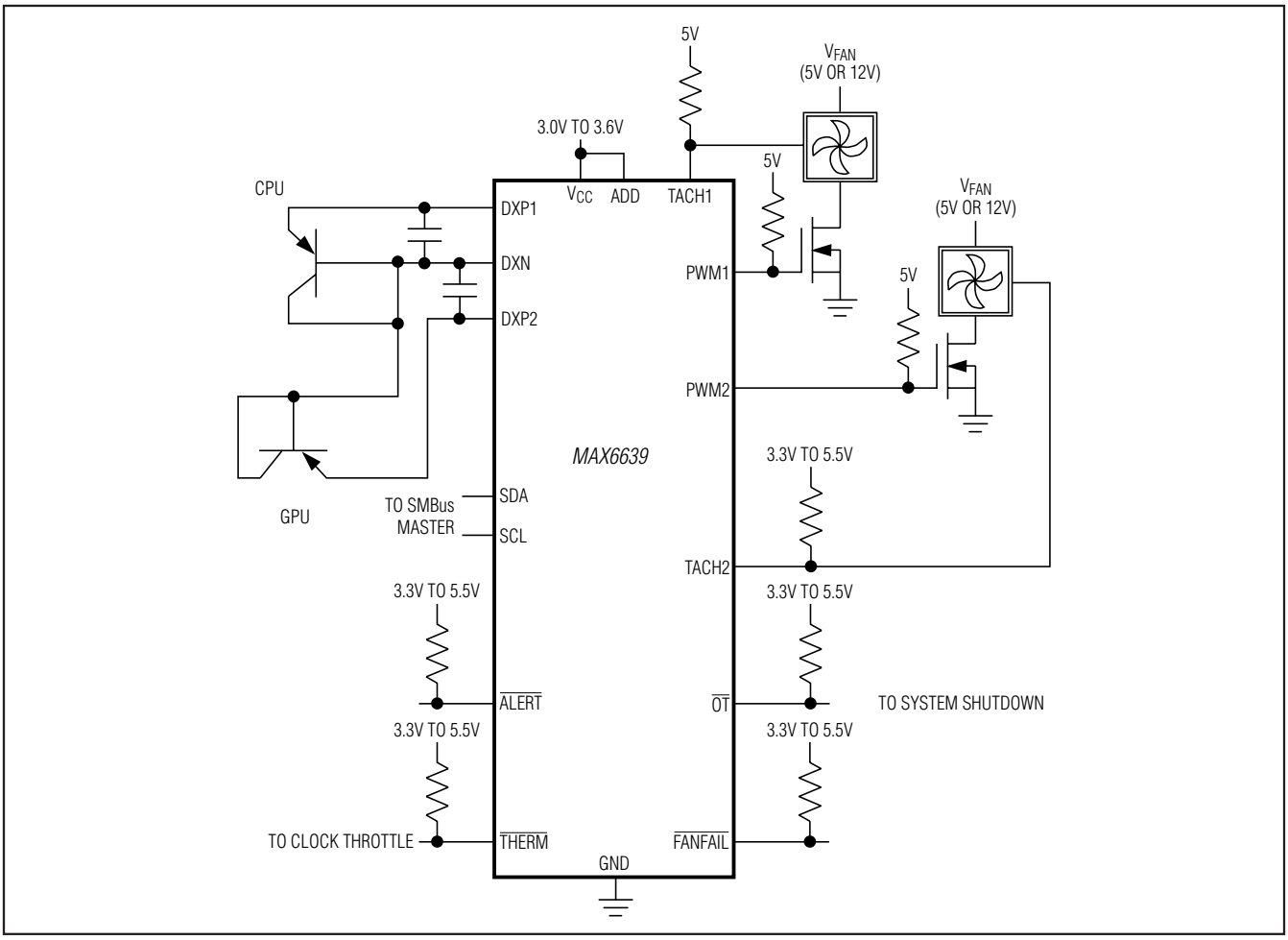

3) Route the DXP and DXN traces parallel and close to each other, away from any high-voltage traces such as +12VDC. Avoid leakage currents from PCB contamination. A 20MΩ leakage path from DXP ground causes approximately +1°C error.

4) Connect guard traces to GND on either side of the DXP/DXN traces. With guard traces, placing routing near high-voltage traces is no longer an issue.

5) Route as few vias and crossunders as possible to minimize copper/solder thermocouple effects.

6) When introducing a thermocouple, make sure that both the DXP and the DXN paths have matching thermocouples. In general, PCB-induced thermocouples are not a serious problem. A copper solder thermocouple exhibits 3µV/°C, and it takes approximately 200µV of voltage error at DXP/DXN to cause a +1°C measurement error, so most parasitic thermocouple errors are swamped out.

7) Use wide traces. Narrow traces are more inductive and tend to pick up radiated noise. The 10-mil widths and spacings recommended are not absolutely necessary (as they offer only a minor improvement in leakage and noise), but use them where practical.

8) Placing an electrically clean copper ground plane between the DXP/DXN traces and traces carrying high-frequency noise signals helps reduce EMI.

Downloaded from Arrow.com.

Chip Information

PROCESS: BiCMOS

Package Information

For the latest package outline information and land patterns (footprints), go to **www.maximintegrated.com/packages**. Note that a "+", "#", or "-" in the package code indicates RoHS status only. Package drawings may show a different suffix character, but the drawing pertains to the package regardless of RoHS status.

PACKAGE TYPE	PACKAGE CODE	OUTLINE NO.	LAND PATTERN NO.
16 QSOP	E16+1	21-0055	90-0167
16 TQFN-EP	T1655+3	21-0140	90-0073

Downloaded from Arrow.com.

Revision History

REVISION NUMBER	REVISION DATE	DESCRIPTION	PAGES CHANGED
0	5/05	Initial release	—
1	12/07	Changed max operating voltage range from 5.5V to 3.6V; corrected TOCs 1, 2, and 11; various style edits; and updated package outlines.	1–5, 7, 19, 20, 21, 22
2	4/08	Added MAX6639F option.	1, 2, 5, 18, 20
3	4/13	Updated *Ordering Information*, *Absolute Maximum Ratings*, and *Package Information* sections; corrected Figure 9	1, 2, 17, 21

Maxim Integrated cannot assume responsibility for use of any circuitry other than circuitry entirely embodied in a Maxim Integrated product. No circuit patent licenses are implied. Maxim Integrated reserves the right to change the circuitry and specifications without notice at any time. The parametric values (min and max limits) shown in the Electrical Characteristics table are guaranteed. Other parametric values quoted in this data sheet are provided for guidance.

© 2013 Maxim Integrated Products, Inc. Maxim Integrated and the Maxim Integrated logo are trademarks of Maxim Integrated Products, Inc.

Downloaded from Arrow.com.