THIS DRAWING IS UNPUBLISHED. RELEASED FOR PUBLICATION - ,- .
© COPYRIGHT - BY TYCO ELECTRONICS CORPORATION. ALL INTERNATIONAL RIGHTS RESERVED.

LOC	DIST
—	—

REVISIONS

P	LTR	DESCRIPTION	DATE	DWN	APVD
	A1	REVISED PER ECO-10-007075	01APR10	HMR	JO

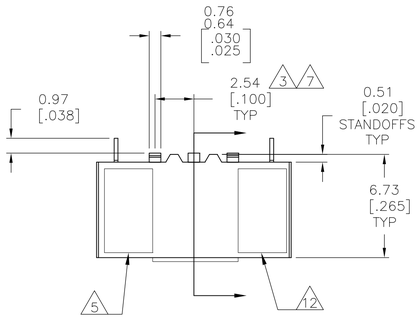

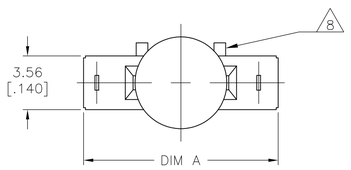

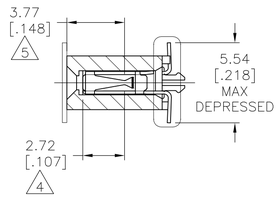

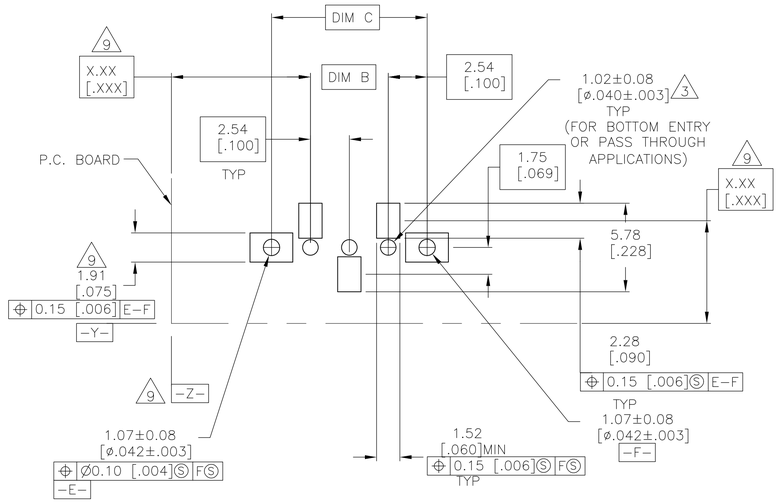

RECOMMENDED PC BOARD PAD PATTERN
0.20[.008] THICK STENCIL

1. HOUSING: GLASS FILLED, FLAME RETARDANT POLYESTER, BLACK
CONTACTS: PHOSPHOR BRONZE.
VACUUM COVER: PLASTIC

2. CONTACTS: DUPLEX PLATED: 0.25µm [.000010] GOLD IN CONTACT AREA 3.81–7.62µm [.000150–.000300] BRIGHT TIN–LEAD ON LEADS, 1.27µm [.000050] MIN NICKEL UNDERPLATE ALL OVER.

3. DIMENSION APPLIES TO HOUSING CAVITY CENTERLINES ONLY.

4. POINT OF MEASUREMENT FOR PLATING THICKNESS.

5. POINT OF CONTACT DIMENSION.

6. TE PART NUMBER AND DATE CODE ARE MARKED IN APPROXIMATE LOCATION SHOWN.

7. TOLERANCE IS NON–CUMULATIVE.

8. 6.0±0.13 [.236±.005] TARGET AREA FOR VACUUM PICK–UP COVERS TO BE REMOVED AFTER SOLDERING.

9. DATUMS AND BASIC DIMENSIONS ESTABLISHED BY CUSTOMER

12. TE LOGO AND CSA LOGO ARE MOLDED INTO HOUSING.

13. NO PART NUMBER MARKING REQUIRED ON THIS PART.

14. CONTACTS: DUPLEX PLATED: 0.25µm [.000010] GOLD IN CONTACT AREA 3.81–7.62µm [.000150–.000300] MATTE TIN ON LEADS, 1.27µm [.000050] MIN NICKEL UNDERPLATE ALL OVER.

15. ALL MATERIALS AND FINISHES SHALL COMPLY WITH EU DIRECTIVE 2002/95/EC OF 27JAN2003 (ROHS).

FINISH	EIA TAPE WIDTH	DIM C	DIM B	DIM A	NO OF POSN	PART NUMBER
15 13 14	44mm	10.16 [.400]	5.08 [.200]	12.7 [.500]	3	5-1977628-1
13 2		10.16 [.400]	5.08 [.200]	12.7 [.500]	3	1977628-1

THIS DRAWING IS A CONTROLLED DOCUMENT.

DIMENSIONS: mm [INCHES]

TOLERANCES UNLESS OTHERWISE SPECIFIED:
0 PLC ± –
1 PLC ± –
2 PLC ± –
3 PLC ± .005
4 PLC ± –
ANGLES ± –

MATERIAL 1
FINISH SEE TABLE

DWN S SCHLEGEL 28MAY2009
CHK J OLSON 5/28/09
APVD J OLSON 5/28/09 NAME

Tyco Electronics Corporation
Harrisburg, PA 17105-3608

RECPT. ASSY., MOD IV, SINGLE ROW, .100 CL, SURFACE MOUNT, VERTICAL, DUAL ENTRY CLOSED ENTRY

PRODUCT SPEC 108-25026
APPLICATION SPEC 114-25018
WEIGHT —

SIZE A1 CAGE CODE 00779 DRAWING NO C-1977628 RESTRICTED TO —

CUSTOMER DRAWING SCALE 5:1 SHEET 1 OF 1 REV A1

OBSOLETE
NOT the LATEST
REVISION

Downloaded from Arrow.com.